5-Port Solenoid Valve

Plug-in Type

Due to the flow increase, the valve size can be reduced!

Saves energy and space

SY3000

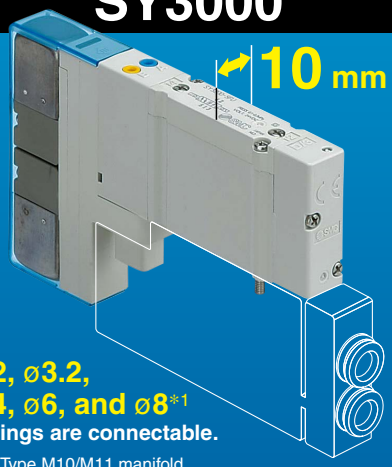

ø2, ø3.2, ø4, ø6, and ø8*1 fittings are connectable.

*1 Type M10/M11 manifold

At 300 mm/s

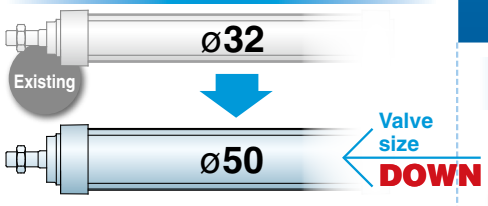

Can drive cylinders of up to ø50*2 (ø80 at 100 mm/s)

SY5000

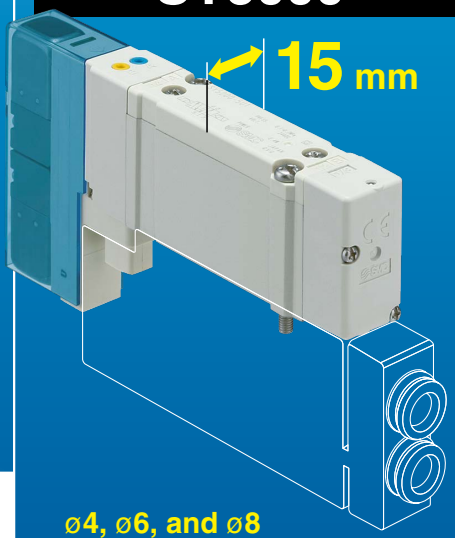

ø4, ø6, and ø8 fittings are connectable.

At 300 mm/s

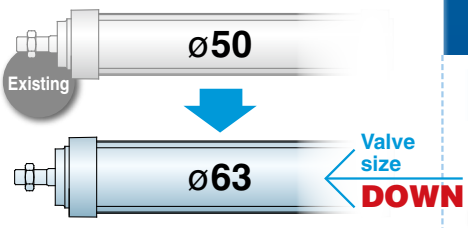

Can drive cylinders of up to ø63*2 (ø125 at 100 mm/s)

SY7000

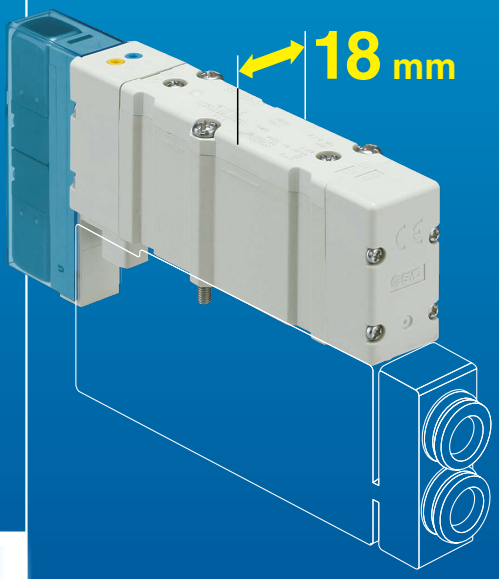

ø6, ø8, ø10, and ø12 fittings are connectable.

At 300 mm/s

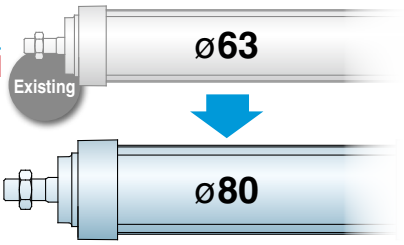

Can drive cylinders of up to ø80*2 (ø160 at 100 mm/s)

*2 Values based on comparison with the existing SMC model
For details, refer to page 13.



Metal Base



Connector
Connecting Base



Sub-plate

Compatible with wireless systems



With pressure sensor

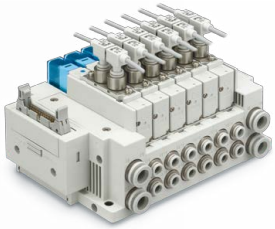

SY3000/5000/7000 Series

SMC

CAT.ES11-103E ⓐ

5-Port Solenoid Valve

Plug-in Connector Connecting Base [IP67*1]

*1 Refer to page 37 for details on IP67.

Manifold

Side ported From p. 41 | Bottom ported From p. 41 | Top ported From p. 53

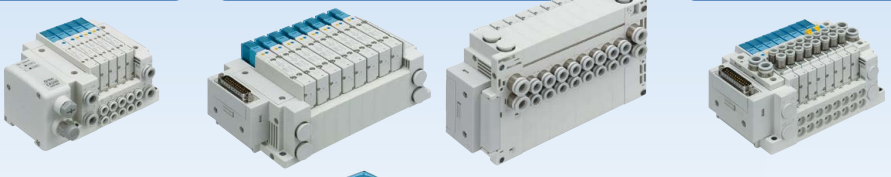

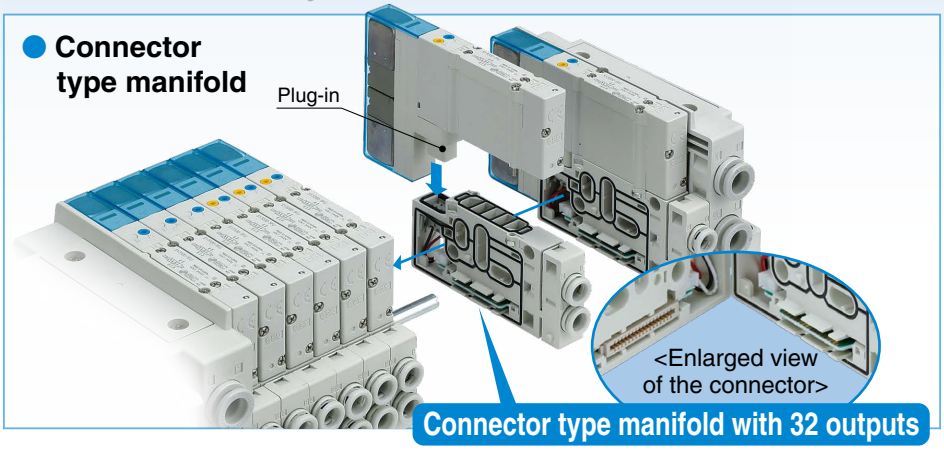

Plug-in
Compatible sub-plate type

From p. 280



- IP67 enclosure for standard specifications
- The M12 waterproof connector type ensures easy attaching/detaching and wiring.
- Applicable to the side, top, and bottom-ported types (4A and 2B ports)

Plug-in Metal Base [IP40]

Side ported From p. 223 | Bottom ported From p. 223 | Top ported From p. 243



Wiring

D-sub Connector | **Flat Ribbon Cable** | **Terminal Block Box** | **Lead Wire**
Circular Connector | **Serial Transmission**

Serial Transmission Variations

Series	Gateway-type		Integrated-type (for input/output)			Integrated-type (for output)			
	EX510	EX500	EX600	EX245	EX250	EX260	EX126	EX120	EX180
Applicable protocol									
DeviceNet®	●		●		●	●		●	●
PROFIBUS DP	●	●	●		●	●		●	●
CC-Link	●		●			●	●	●	●
EtherNet/IP™		●	●		●	●			
EtherCAT			●			●			
PROFINET		●	●	●		●			
CANopen					●				
AS-Interface					●				
OMRON CompoBus/S								●	
CompoNet®								●	
Ethernet POWERLINK						●			
IO-Link						●			
EtherNet/IP™ compatible wireless base			●						
PROFINET compatible wireless base			●						
PROFIsafe						●			

Power Saving

Power Consumption

With power saving circuit: **0.1 W**

Standard: **0.35 W**

[Electrical power waveform with power saving circuit]

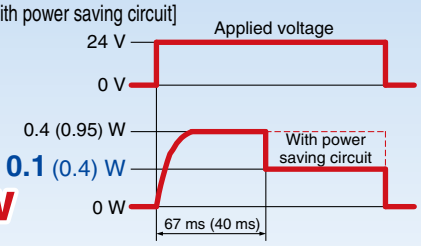

Power consumption is reduced by the power saving circuit.

Power consumption is decreased to approx. 1/3 by reducing the wattage required to hold the valve in an energized state. (Effective energizing time is over 67 ms at 24 VDC.) Refer to the electrical power waveform to the left.

* Only products with an indicator light are equipped with the power saving circuit.
* The value in ( ) is for the quick response and high pressure types.

Long Service Life

Metal seal

(Service life: 200 million cycles)[*1]

*1 According to SMC life test conditions
*2 Please contact SMC if life test data is required.

Space Saving / Improved Operability

Wiring, piping, and operation are integrated on one side.

A multiple-layer type is available as an option that saves space in the lateral direction.

From p. 204

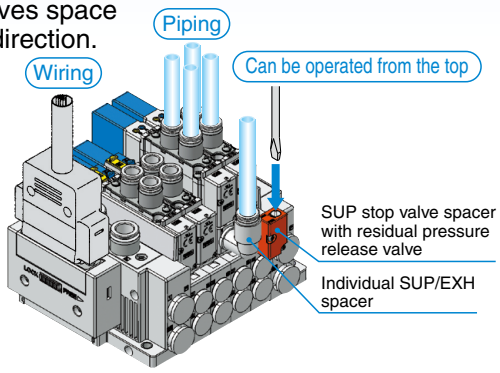

A bottom-ported type is available (A and B ports).

Space saving

By using the bottom-ported type, it is possible to reduce the amount of space required for installation.

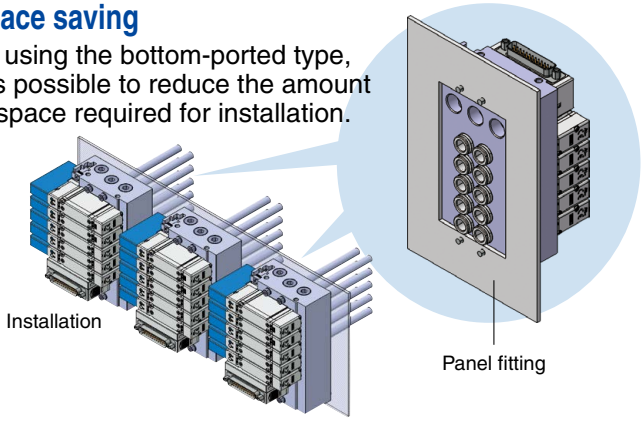

A 4-position dual 3-port valve is available.

(Only for the rubber seal type)

• Two 3-port valves built into one body

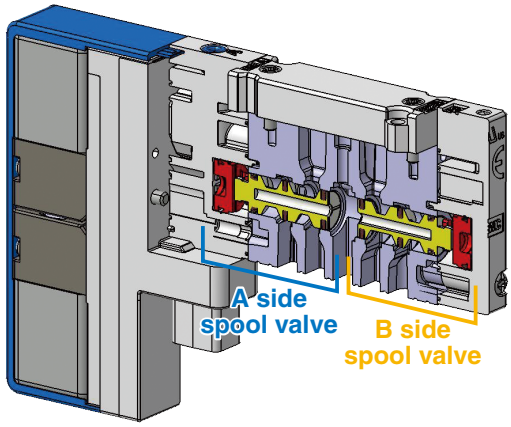

- 3-port valves on the A and B sides can be operated independently.
- When used as a 3-port valve, only half the number of stations is required.
- Can also be used as a 4-position, 5-port valve
- A 4-position dual 3-port valve with a back pressure check valve is also available.
- Combination examples

Series	A side	B side
SY□A$^{0}_{3}$0	N.C. valve	N.C. valve
SY□B$^{0}_{3}$0	N.O. valve	N.O. valve
SY□C$^{0}_{3}$0	N.C. valve	N.O. valve

Different sizes (SY3000/5000 or SY5000/7000) can be mixed!

From p. 165

It is possible to reduce installation space, the number of serial units, and the amount of wiring.

Overall manifold length **Approx. 29% reduction**

For serial transmission EX260

Installation space

SY5000 manifold
SY5000: 3 stations

SY3000 manifold
SY3000: 4 stations

Mixed manifold
SY5000: 3 stations, SY3000: 4 stations

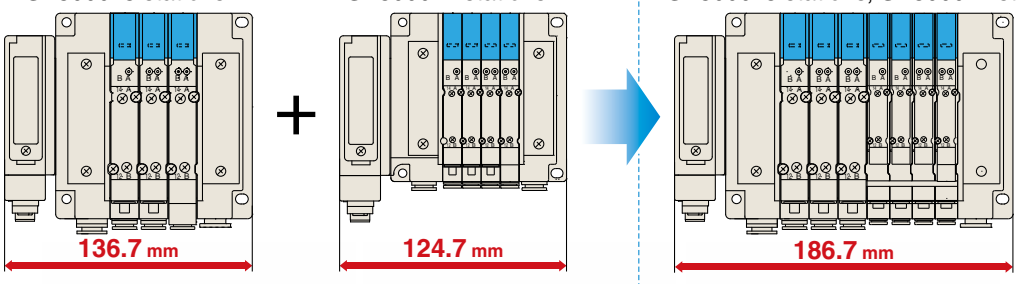

Number of serial units



5-Port Solenoid Valve
Improved Safety

Back Pressure Check Valve

This prevents actuator and air operated valve malfunctions caused by the exhaust from other valves.*1

Built-in valve type

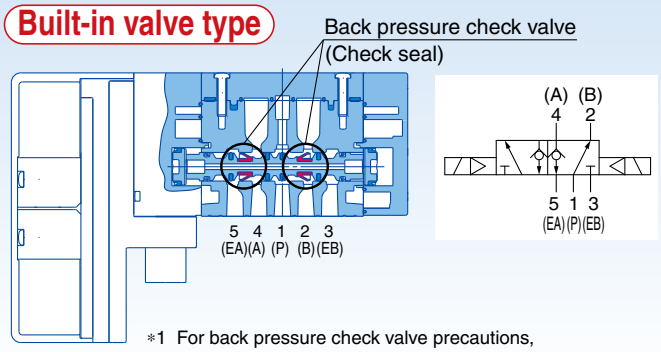

*1 For back pressure check valve precautions, refer to the "Specific Product Precautions" on page 291.

Retrofit or pre-installed type

If the product is affected by back pressure after installation, a back pressure check valve assembly can be added. p. 212

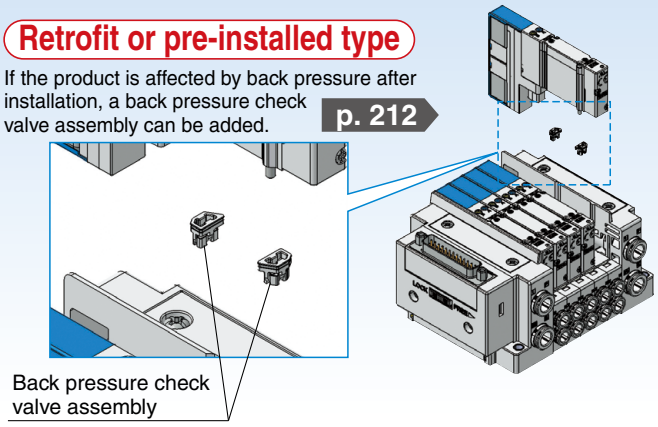

With residual pressure release valve (SY5000/7000) p. 24

IP67 compliant

For residual pressure release of the 3-position closed center valve

- The pressure of the 4 (A) and 2 (B) ports is exhausted automatically when the pressure of the 1 (P) port is exhausted.
- The pressure can be visualized using the indicator (red).
- Since this valve is not a spacer type, the flow rate is equivalent to that of the normal closed center valve.

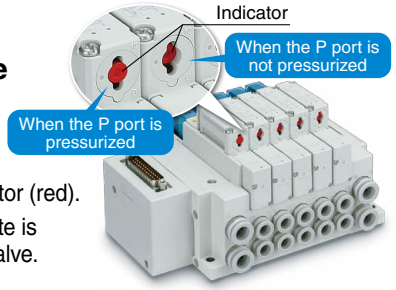

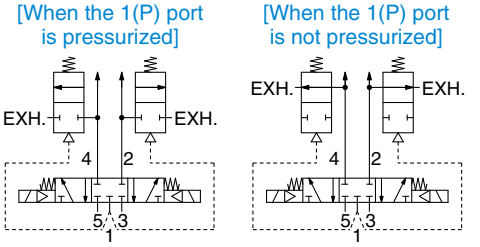

Lever Type SUP Stop Valve Spacer (With residual pressure release valve) p. 205

A lever has been added to manual override button!

Solenoid valves can be replaced individually without shutting off the main pressure!*1

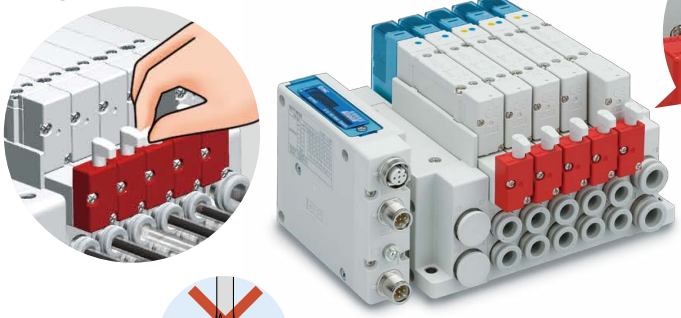



Easy to visually check

2-action operation

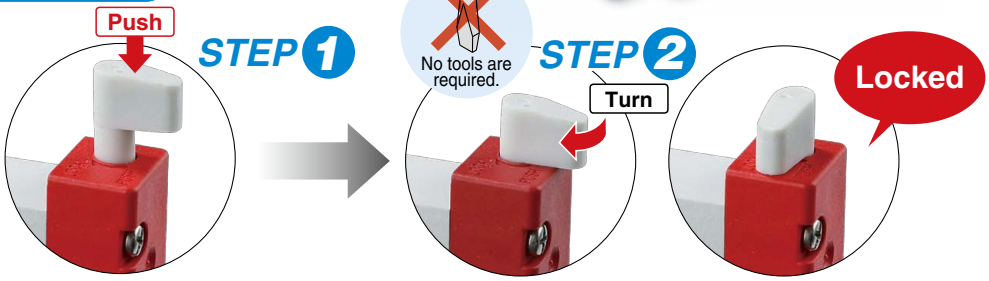

Air for solenoid valves can be shut off individually!

The operation of an actuator can be checked by individually shutting off the air for the solenoid valves on the base while the main air is being supplied during a trial operation.

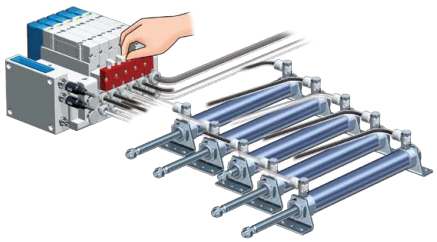

Solenoid valves can be replaced individually!

The solenoid valves can be replaced individually without stopping the equipment during maintenance.

<Application example>

For air operated valves, such as sanitary valves, and automatic valve control

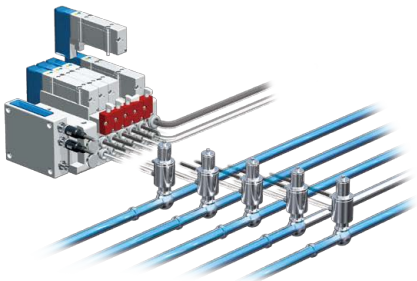

*1 This product is only for internal pilot specifications as the external pilot air cannot be shut off.

Improved Safety

Slotted Type

SUP Stop Valve Spacer

(With residual pressure release valve) p. 205

Air supply to each valve can be stopped individually. The valve and cylinder can be replaced without stopping other devices and equipment.

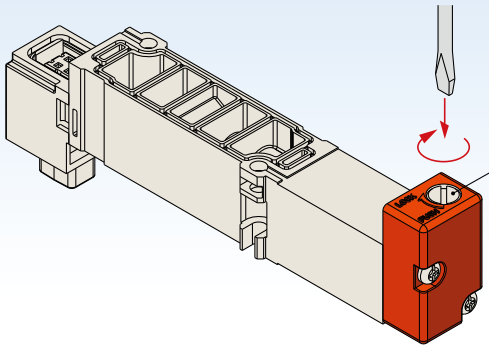

Button for manual release of residual pressure

To exhaust residual pressure on the cylinder side

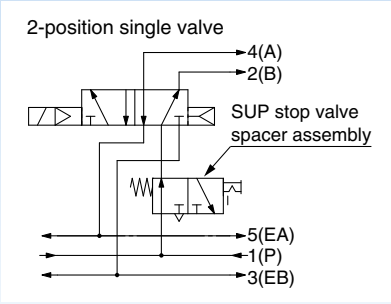

2-position single valve example

Slotted Type

Double Check Spacer

(With residual pressure release valve) p. 206

Long intermediate stops and position holding are possible.

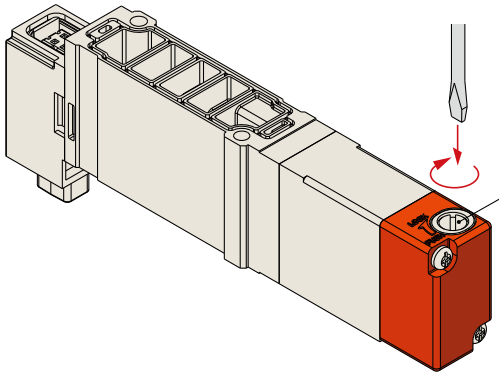

Button for manual release of residual pressure

To exhaust residual pressure on the cylinder side

[Intermediate stop]

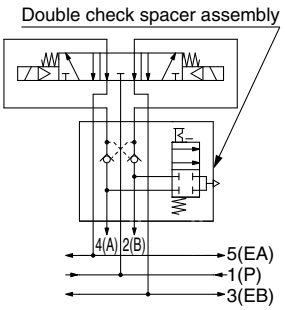

Exhaust center

[Drop prevention]

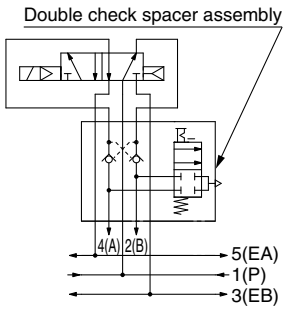

2-position single/double

With slide locking manual override

ON/OFF operation and locking can be performed manually.

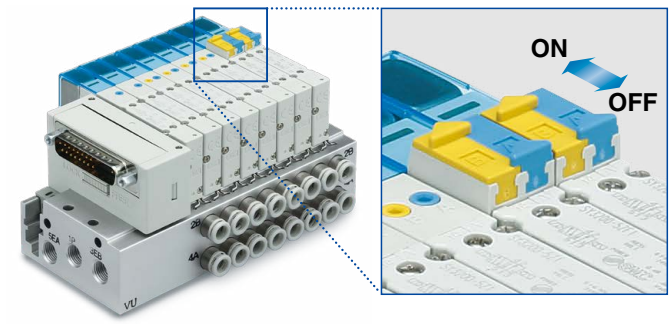

The ON/OFF state can be checked at a glance.

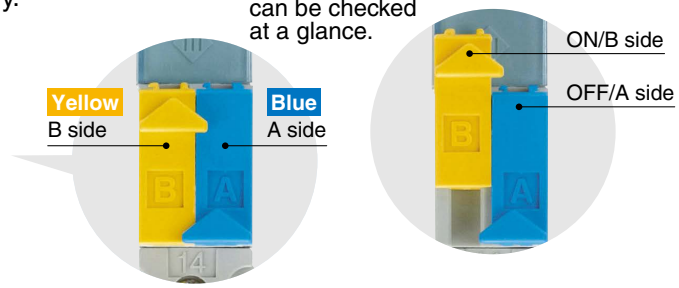

5-Port Solenoid Valve
Improved Safety



Made to Order

With safety slide locking manual override
SY3000/5000/7000-X13 p. 34

The double action manual override prevents accidental operation!

●Double-action operation

Before operation The slide locking manual overrides cannot be turned ON with the safety slide cover in place. (OFF status: Locked)

Operation 1 The safety slide cover is operated and moves upward. (Unlocked)

Operation 2 The slide locking manual overrides can be operated.

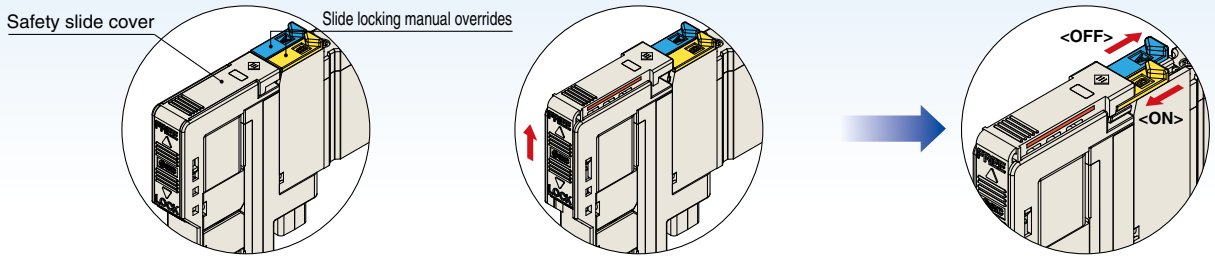

<Vertical sliding> **<Horizontal sliding>**

∗ The safety slide cover cannot be locked when the slide locking manual override is turned ON.

●Visual check

Red lines visible from three directions can be checked to confirm whether the safety slide cover is unlocked (FREE).

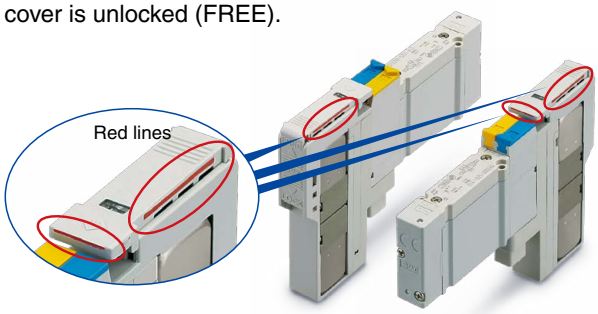

Safety slide covers can be checked from their raised and lowered positions.

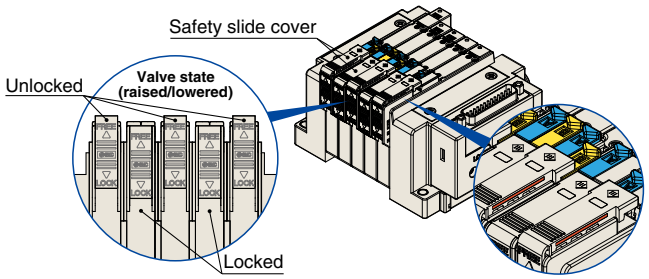

Made to Order

2-Position Single Solenoid Valve with Built-in Return Spring (Only rubber seal type)
SY3000/5000/7000-X350 p. 34

The main valve returns to the OFF position when it is not pressurized.

The main valve has a built-in spring which allows it to return to origin (the OFF position) when the supply pressure is stopped. This product can be used in SRP/CS (safety-related parts of control systems) constructions in accordance with safety standards (ISO 13849).

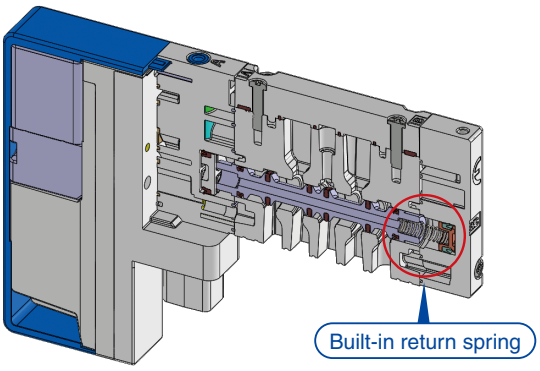

5-Port Solenoid Valve

To mount the piping on top

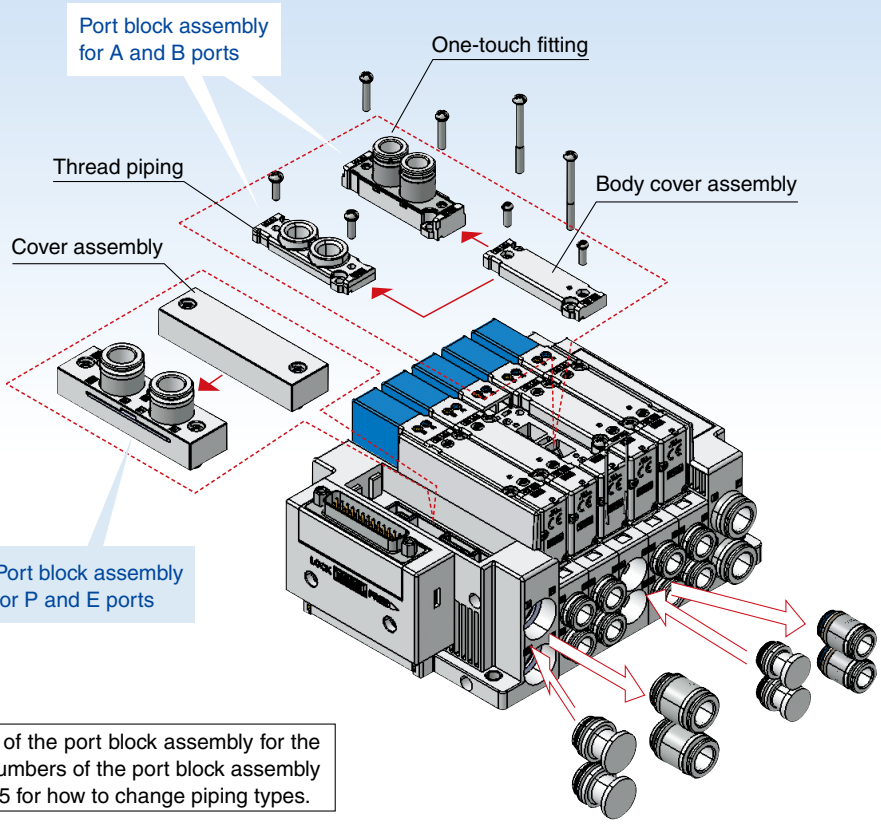

Refer to page 22 for part numbers of the port block assembly for the A and B ports, page 201 for part numbers of the port block assembly for the P and E ports, and page 295 for how to change piping types.

To mount the piping on the side

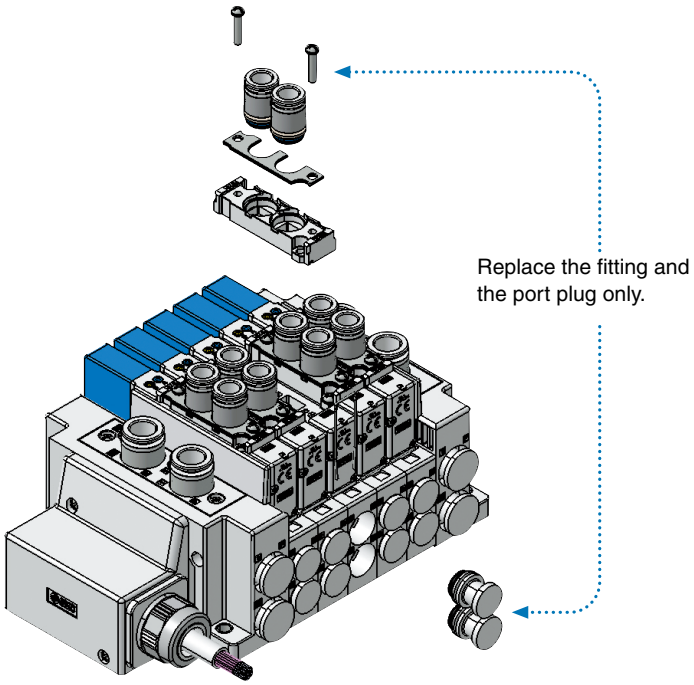

Mixed top-ported and side-ported mounting is possible.

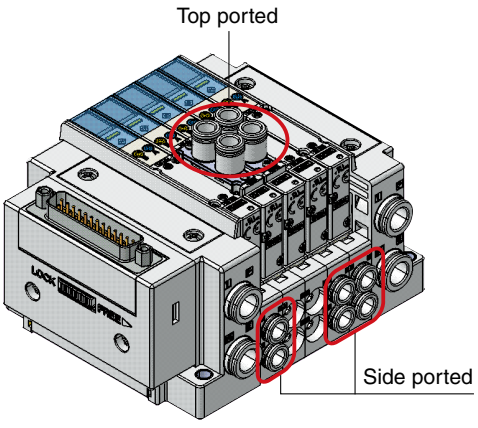

For SY3000 Blanking Plate with Output p. 211

The blanking plate extracts the individual signal of the manifold valve.

Without connector	With M12 connector	With connector
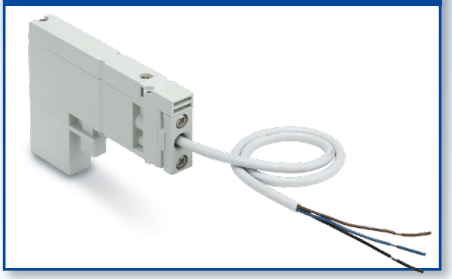	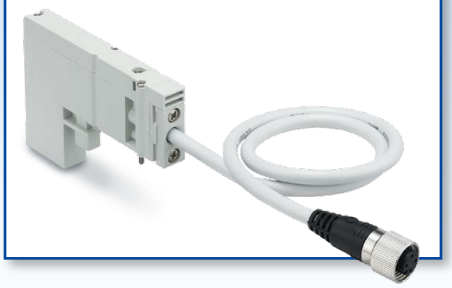	(For the individual wiring of the ZK2 vacuum unit) 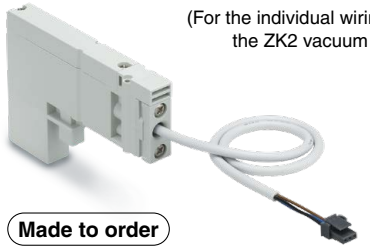 Made to order

Application Examples

For the control of separately mounted valves

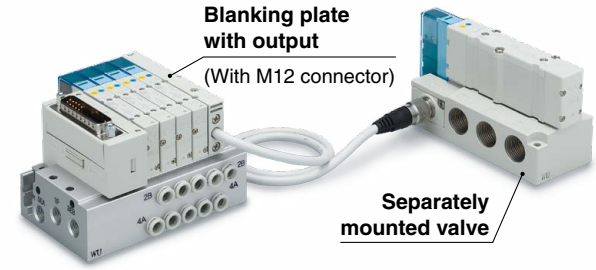

For the control of vacuum ejectors by means of Fieldbus unit signals

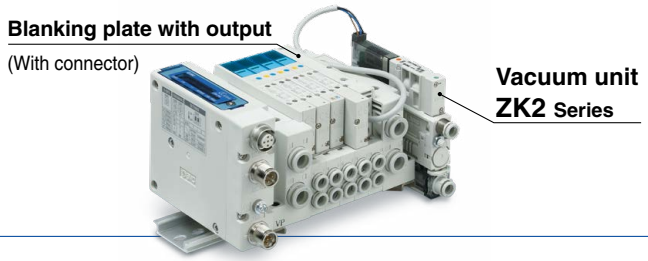

Valve with Pressure Sensor p. 32

Monitoring the output pressure of the solenoid valve contributes to preventive maintenance.

- The output pressure of the 4(A) and 2(B) ports can be detected.
- Detects errors such as incorrect switching, response delay, back pressure interference, pressure drop, etc.
- Identifies faulty parts of actuators, solenoid valves, etc.

Space saving, Reduced installation labor

- The required amount of space and installation labor can be reduced by directly mounting pressure switches on the solenoid valves.

Mountable manifolds

Metal base	Side ported/Type 50☐ Bottom ported/Type 51☐
Connector connecting base	Side ported/Type 10☐ Bottom ported/Type 11☐

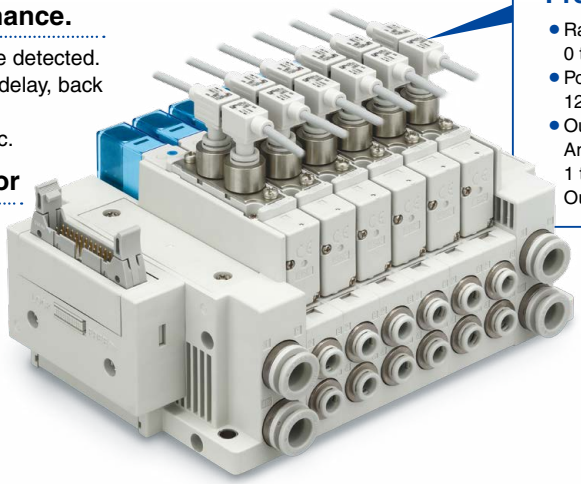

Pressure sensor

- Rated pressure range: 0 to 1 MPa
- Power supply voltage: 12 to 24 VDC ±10%
- Output specifications: Analog output 1 to 5 V (In rated pressure range) Output impedance: Approx. 1 kΩ

Application Examples

For the detection of output pressure

Operation can be checked by monitoring the pressure required to open or close air operated valves.

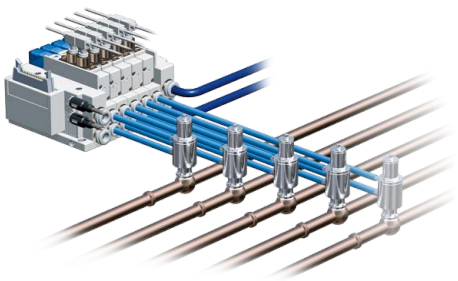

For the identification of faulty parts

A faulty part can quickly be identified by monitoring the operation of solenoid valves.

Solenoid valve

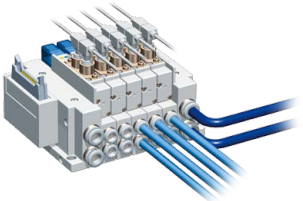

Actuator

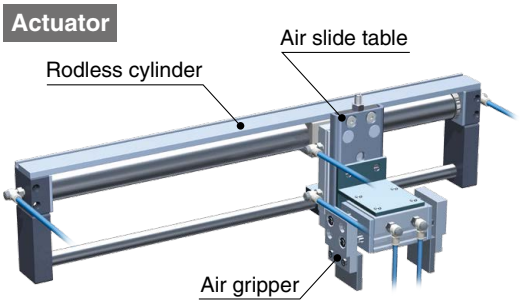

5-Port Solenoid Valve

Only for External Pilot Vacuum Release Valve with Restrictor SY$^{3}_{5}$A□R Series p. 26

Vacuum suction and release can be controlled with a single valve!

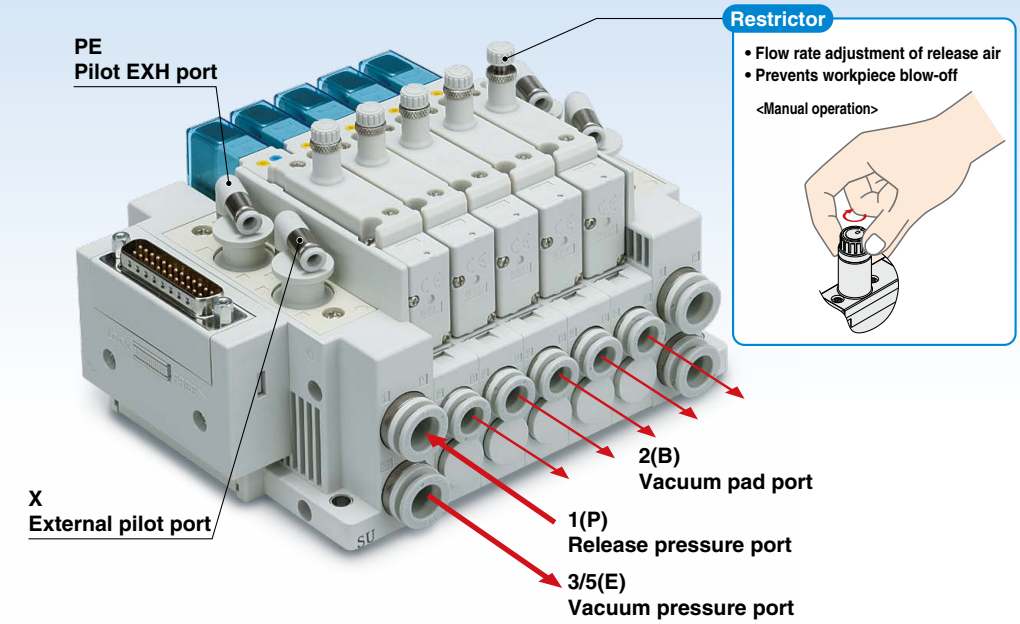

■ Can be mounted on the same manifold as standard valves

＊ When an individual EXH spacer is used

■ Example

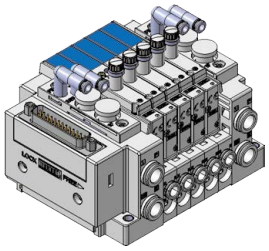

Mountable manifolds





Connector connecting base

Metal base

Side ported	Bottom ported	Top ported
Type 10	Type 11	Type 12
Type 50		Type 52

＊ External pilot specification

Applicable to EX600-W Series Wireless Systems

p. 113 p. 123 p. 165 p. 169 p. 177

Noise resistance

- Uses the 2.4 GHz ISM frequency band
- Frequency hopping: Every 5 ms

High-speed connection

- From the remote power supply ON to start of communication: **Min. 250 ms**

Communication response

- Wireless communication signal Response time: **5 ms**

Communication cables not required

- Reduced wiring work, space, and cost
- Minimized disconnection risk

Number of I/O points

- Max. 1280 inputs/1280 outputs

(Max. 128 inputs/128 outputs per module)

Compatible protocol

EtherNet/IP PROFINET





Application Examples

For tool changing

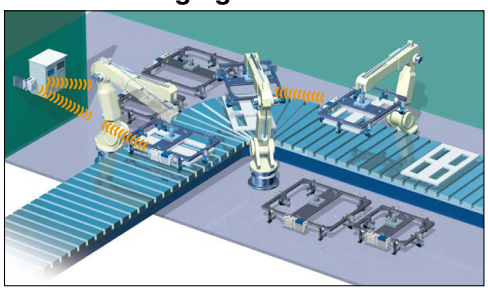

For spot welding

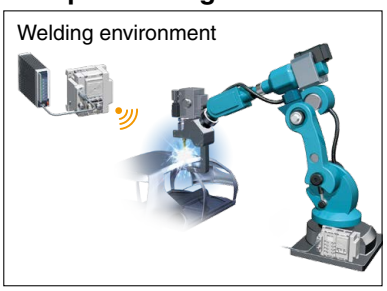

For rotary tables

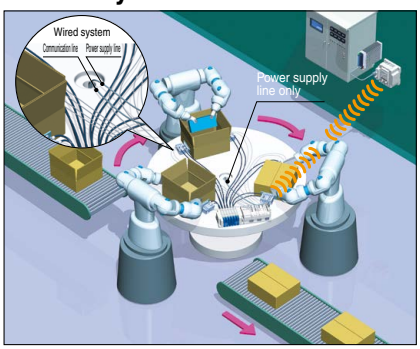

The EX260 series supports safety communication (PROFIsafe).

p. 135-1

This is a Fieldbus unit which supports safety standard ISO 13849-compliant safety circuit constructions.

PROFIsafe

PROFIsafe is established as an international standard (IEC 61784-3-3). It is a communication protocol that transmits safety-related data by PROFINET communication and can be used up until safety standards ISO 13849-1 PL e and IEC 61508/IEC 62061 SIL 3.

Using the safety communication protocol

Refer to the EX260 **Web Catalog** for details on units that support the safety communication protocol.
When using a manifold valve within an ISO 13849-compliant safety system, the device needs to be considered from both the pneumatic circuit and the electric side.
Devices (including valves) need to be selected based on whether their functions are in line with the safety level of the equipment as a whole.
The use of valves that have been validated as being compliant with ISO 13849-2 may be required.
For details on valves that have been validated, please contact SMC.
In addition, refer to “Safety Instructions” for precautions on model selection.

5-Port Solenoid Valve

Variations

Variations				Valve Series / 5 ports	Wiring: Connection: D-sub connector	Flat ribbon cable	Terminal block box (Spring type)	Terminal block box	Lead wire	Circular connector	M12 connector	Serial transmission: EX510	EX500 (128 points)	EX500 (64 points)	EX600	EX245	EX250	EX260	EX126	EX120	EX180	Common specification: Positive common	Negative common	A, B: M5	1/8	1/4	3/8	C2: Straight piping
Plug-in Connector Connecting Base	Manifold	Side ported	 Type 10□ From p. 41	SY3□0□	●	●	●	●	●	●	—	—	●	●	●	●	●	●	●	●	●	●	●	—	—	—	—	●
				SY5□0□	p. 41	p. 41	p. 59	p. 67	p. 77	p. 87			p. 97	p. 103	p. 113	p. 124-1	p. 125	p. 133	p. 141	p. 149	p. 156-1								—
				SY7□0□																									
		Bottom ported	 Type 11□ From p. 41	SY5□0□	●	●	●	●	●	●	—	—	●	●	●	●	●	●	●	●	●	●	●	—	—	—	—	—
				SY7□0□	p. 41	p. 41	p. 59	p. 67	p. 77	p. 87			p. 97	p. 103	p. 113	p. 124-1	p. 125	p. 133	p. 141	p. 149	p. 156-1								
		Top ported	 Type 12□ From p. 53	SY3□3□	●	●	●	●	●	●	—	—	●	●	●	●	●	●	●	●	●	●	●	●	—	—	—	●
				SY5□3□	p. 53	p. 53	p. 64	p. 73	p. 83	p. 93			p. 109	p. 111	p. 123	p. 124-5	p. 131	p. 139	p. 147	p. 155	p. 156-7			—	●	—	—	—
				SY7□3□																				—	—	●		
Plug-in Metal Base		Side ported	 Type 50□ From p. 223	SY3□0□	●	●	—	—	—	—	—	●	—	—	—	—	—	—	—	—	●	●	●	●	—	—	●
				SY5□0□	p. 223	p. 223						p. 251												—	●	●	—	—
				SY7□0□																					—	●		
		Bottom ported	 Type 51□ From p. 223	SY3□0□	●	●	—	—	—	—	—	●	—	—	—	—	—	—	—	—	●	●	●	●	—	—	●
				SY5□0□	p. 223	p. 223						p. 251												—	●	●	—	—
				SY7□0□																					—	●		
		Top ported	 Type 52□ From p. 243	SY3□3□	●	●	—	—	—	—	—	●	—	—	—	—	—	—	—	—	●	●	●	●	—	—	●
				SY5□3□	p. 243	p. 243						p. 261												—	●	●	—	—
				SY7□3□																					—	●		
Plug-in Sub-plate			 M12 connector From p. 282	SY3□$^{0}_{3}$□	—	—	—	—	—	—	●	—	—	—	—	—	—	—	—	—	●	●	—	—	—	—	●	—
				SY5□$^{0}_{3}$□																					—	●		
				SY7□$^{0}_{3}$□																					—	—	●	

● Standard ○ Option ▲ Made to order (Refer to page 34.)

Port Size												Manifold Options pp. 203-218																					Manifold Options pp. 268-278					Valve Options									Valves with Function		
One-touch fittings																																															
C3 (N1)	C4 (N3)		C6 (N7)		C8 (N9)		C10 (N11)		C12																																								
Straight piping	Straight piping	Elbow piping*1	Straight piping	Elbow piping*1	Straight piping	Elbow piping*1	Straight piping	Elbow piping*1	Straight piping	Elbow piping*1	Individual SUP spacer	Individual EXH spacer	SUP stop valve spacer with residual pressure release valve	Double check spacer with residual pressure release valve	Blanking plate	Interface regulator	Individual SUP block assembly	Individual EXH block assembly	Blanking plate with output	SUP/EXH blocking disk	Label for blocking disk	Back pressure check valve assembly (Manifold installed type)	Dual flow fitting	Silencer (One-touch fitting connection type)	Plug	Name plate	SY3000/5000 mixed mounting	SY5000/7000 mixed mounting	Oil resistant (Other than designated turbine oil)	Vacuum/Low-pressure specification	Different pressures	Reverse pressure	Mixed fitting sizes	Enclosure IP67	With residual pressure release valve	Vacuum release valve with restrictor	With pressure sensor
●	●	●	●	●	—	—	—	—	—	—	○	○	○	○	○	○	○	○	○	○	○	○	○	○	○	○	● p. 165	—	▲	● External Pilot	○ Individual SUP	● External Pilot	●	● *2	● *3	● *4	—
—	●	●	●	●	●	●	—	—	—	—									—				—				—	● p. 169									●
	—	—	●	●	●	●	●	●	●	—																																			
—	●	—	●	—	●	—	—	—	—	—	○	○	○	○	○	○	○	○	○	○	○	○	—	○	○	○	● p. 165	—	▲	● External Pilot	○ Individual SUP	● External Pilot	●	● *2	● *3	● *4	●
																			—								—	● p. 169									●
●	●		●		—		—		—																																			
—	●	—	●	—	●	—	—	—	—	—	○	○	○	—	○	○	○	○	○	○	○	○	—	○	○	○	● p. 177	—	▲	● External Pilot	○ Individual SUP	● External Pilot	●	● *2	—	● *4	—
																			—								—	● p. 177									—
●	●		●		—		—		—																																			
—	●	—	●	—	●	—	—	—	—	—	○	○	○	○	○	○	—	—	○	—	—	—	—	—	○	—	—	—	▲	● External Pilot	○ Individual SUP	● External Pilot	●	—	● *3	● *4	●
	—																		—																										
●	●		●		—		—		—																																			
—	●	—	●	—	●	—	—	—	—	—	○	○	○	—	○	○	—	—	○	—	—	—	—	—	○	—	—	—	▲	● External Pilot	○ Individual SUP	● External Pilot	●	—	● *3	—	●
																			—																										
●	●		●		—		—		—																																			
—	●	—	●	—	●	—	—	—	—	—	○	○	○	—	○	○	—	—	○	—	—	—	—	—	○	—	—	—	▲	● External Pilot	○ Individual SUP	● External Pilot	●	—	—	● *4	—
																			—																										
—	—	—	—	—	—	—	—	—	—	—	—	—	○	○	—	○	—	—	—	—	—	—	—	—	—	—	—	—	▲	● External Pilot	—	● External Pilot	—	●	● *3	—	—

*1 For elbow piping, the size can only be specified in millimeters for certain port sizes. Refer to “How to Order Manifolds” for details.
*2 Refer to the “Manifold Specifications” on page 37 for details on IP67.
*3 Only the SY5000/7000 applies.
*4 Only the SY3000/5000 applies.

● One-touch fittings

Straight piping

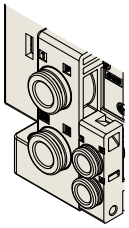

Elbow piping
(Upward)

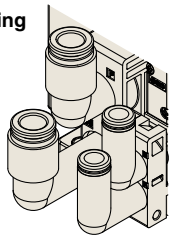

CONTENTS

Optimum Actuation Size Chart of Air Cylinder ····· p. 13

Valve Specifications (Specifications, Response Time, Weight) ····· p. 15

Valve Construction ····· p. 19

Manifold

Plug-in **Connector Connecting Base** p. 36

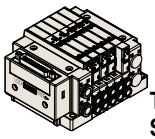
Type 10/ Side ported

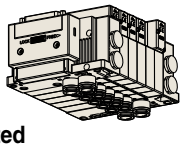
Type 11/ Bottom ported

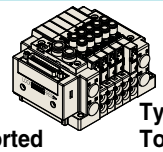
Type 12/ Top ported

Type 10/Side Ported, Type 11/Bottom Ported, Type 12/Top Ported


D-sub connector


Flat ribbon cable


Terminal block box


Lead wire


Terminal block box (Spring type)


Circular connector


EX500


EX600


EX245


EX250


EX260


EX126

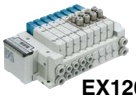
EX120


EX180


Mixed mounting

Plug-in Connector Connecting Base ····· p. 37

D-sub Connector, Flat Ribbon Cable [IP40/67] ····· p. 41

Terminal Block Box (Spring Type) [IP67] ····· p. 59

Terminal Block Box [IP67] ····· p. 64

Lead Wire [IP67] ····· p. 77

Circular Connector [IP67] ····· p. 87

EX500 Gateway Decentralized System 2 (128 Points) [IP67] ····· pp. 97, 109

EX500 Gateway Decentralized System (64 Points) [IP67] ····· pp. 103, 111

EX600 Integrated Type (For Input/Output) Serial Transmission System (Fieldbus System) [IP67] ···· p. 113

EX245 Integrated Type (For Input/Output) Serial Transmission System [IP65] ····· p. 124-1

EX250 Integrated Type (For Input/Output) Serial Transmission System [IP67] ····· p. 125

EX260 Integrated Type (For Output) Serial Transmission System [IP67] ····· p. 133

EX126 Integrated Type (For Output) Serial Transmission System [IP67] ····· p. 141

EX120 Integrated Type (For Output) Serial Transmission System [IP20] ····· p. 149

EX180 Integrated Type (For Output) Serial Transmission System [IP20] ····· p. 156-1

Type 10/Side Ported: Common Dimensions
(External Pilot, Silencer, Elbow Fittings, Slide Locking Manual Override) ····· p. 157

Type 11/Bottom Ported: Common Dimensions ····· p. 160

Type 12/Top Ported: Common Dimensions ····· p. 162

Plug-in Mixed Mounting Type Manifold ····· p. 165

Manifold Exploded View [Exploded View, Manifold Parts Nos.] ····· p. 181

How to Increase Connector Type Manifolds ····· p. 197

One-touch Fitting, Plug Assembly Part Nos. ····· p. 202

Manifold Options ····· p. 203

Manifold

Plug-in Metal Base p. 220

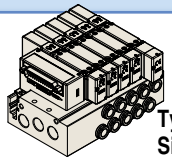
Type 50/
Side ported

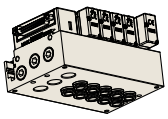
Type 51/
Bottom ported

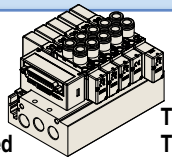
Type 52/
Top ported


D-sub connector


Flat ribbon cable

Type 50/Side Ported, Type 51/Bottom Ported, Type 52/Top Ported

Plug-in Metal Base ..... p. 221

D-sub Connector, Flat Ribbon Cable [IP40]

Type 50/Side Ported ..... p. 223

Type 51/Bottom Ported ..... p. 223

Type 52/Top Ported ..... p. 243


EX510

Wiring Specifications ..... p. 248

EX510 Gateway Type Serial Transmission System [IP20]

Type 50/Side Ported ..... p. 251

Type 51/Bottom Ported ..... p. 251

Type 52/Top Ported ..... p. 261

Manifold Exploded View [Exploded View, Manifold Parts Nos.] ..... p. 266

One-touch Fitting, Plug Assembly Part Nos. ..... p. 267

Manifold Options ..... p. 268

Sub-plate

Plug-in Sub-plate p. 280

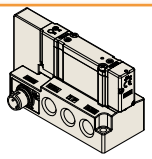
M12 connector



Plug-in Sub-plate Specifications (M12 Connector) ..... p. 281

Sub-plate Parts Nos. ..... p. 283

Valve Replacement Parts ..... p. 22

With Residual Pressure Release Valve ..... p. 24

Vacuum Release Valve with Restrictor ..... p. 26

Valve with Pressure Sensor ..... p. 32

Made to Order for Valves ..... p. 34

Specific Product Precautions ..... p. 290

Model Index ..... p. 298

Optimum Actuation Size Chart of Air Cylinder

Applicable cylinder speed	Main valve seal type	Series	Applicable cylinder					
			ø6	ø10	ø16	ø20	ø25	
100 mm/s or less	Rubber seal	SY3000						
		SY5000						
		SY7000						
	Metal seal	SY3000						
		SY5000						
		SY7000						
300 mm/s or less	Rubber seal	SY3000						
		SY5000						
		SY7000						
	Metal seal	SY3000						
		SY5000						
		SY7000						
500 mm/s or less	Rubber seal	SY3000						
		SY5000						
		SY7000						
	Metal seal	SY3000					●	
		SY5000						
		SY7000						

[Common conditions]
- Pressure: 0.5 MPa
- Piping length: 1 m
- Load ratio: 50%
- Stroke: 200 mm

Connector type manifold (for the side and bottom-ported types)

∗ Use as a guide for selection.
Please check the actual conditions with SMC Model Selection Software.

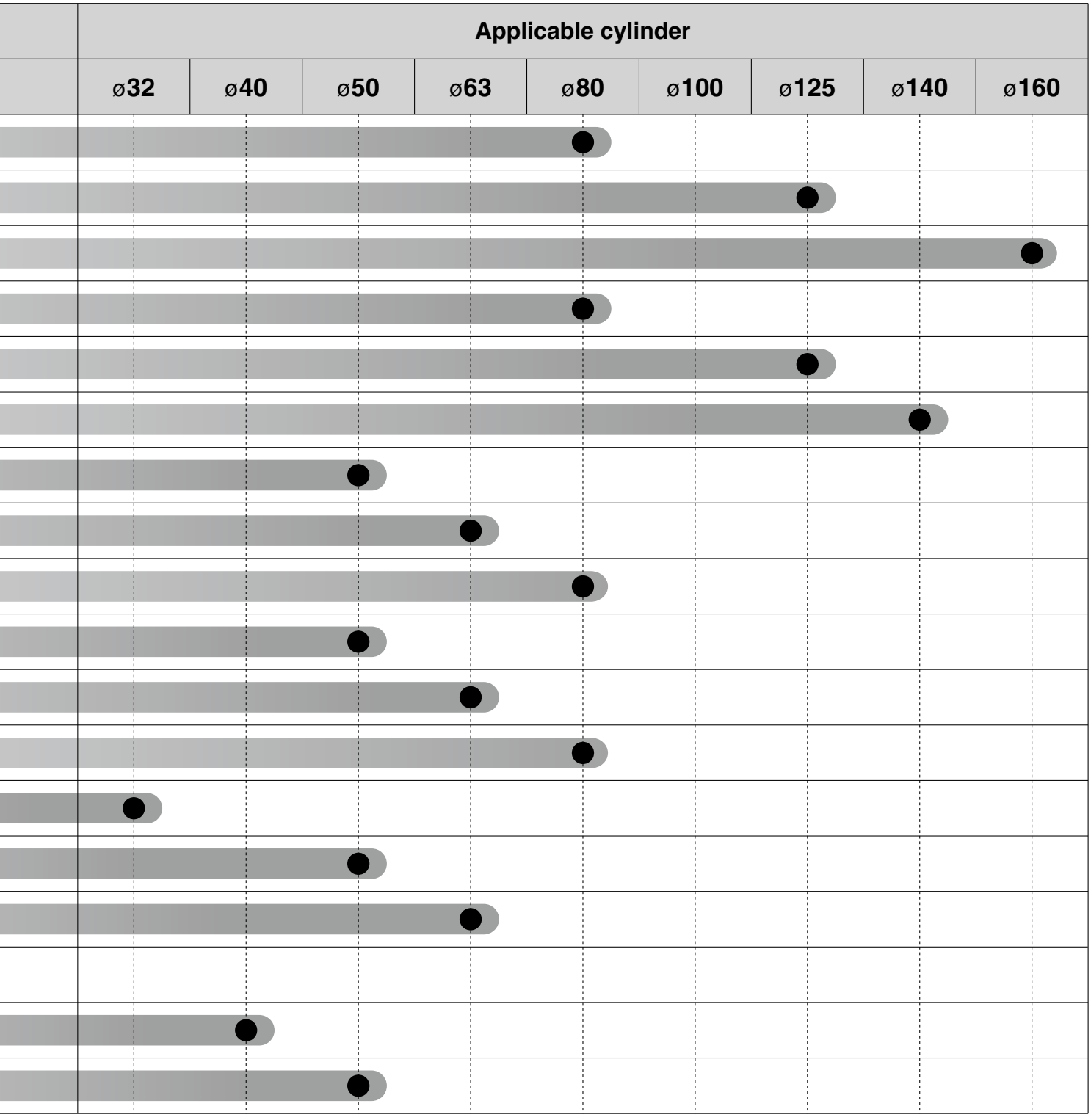
Applicable cylinder
ø32
ø40
ø50
ø63
ø80
ø100
ø125
ø140
ø160

SY3000/5000/7000 Series
Valve Specifications

Valve Specifications

Valve type			Rubber seal	Metal seal
Fluid			Air	
Internal pilot operating pressure range [MPa]	**2-position single**		0.15 to 0.7	0.1 to 0.7 (High pressure type: 0.1 to 1)
	2-position double		0.1 to 0.7	
	3-position		0.2 to 0.7	
	4-position dual 3-port valve		0.15 to 0.7	—
External pilot operating pressure range [MPa]	**Operating pressure range**		–100 kPa to 0.7 (4-position: –100 kPa to 0.6)	–100 kPa to 0.7 (High pressure type: –100 kPa to 1)
	Pilot pressure range	**2-position single**	0.25 to 0.7	0.1 to 0.7 (High pressure type: 0.1 to 1)
		2-position double		
		3-position		
		4-position dual 3-port valve	Operating pressure + 0.1 or more (Min. 0.25) to 0.7	—
Ambient and fluid temperatures [°C]			–10 to 50 (No freezing)	
Max. operating frequency [Hz]	**SY3000 SY5000**	**2-position single/double**	5	20∗1
		4-position dual 3-port valve		
		3-position	3	10∗1
	SY7000	**2-position single/double**	5	10∗1
		4-position dual 3-port valve	3	—
		3-position	3	10∗1
Manual override			Non-locking push type	
			Push-turn locking slotted type	
			Push-turn locking lever type	
			Slide locking type	
Pilot exhaust type	**Internal pilot**		Main/Pilot valve common exhaust	Main/Pilot valve individual exhaust
	External pilot		Pilot valve individual exhaust	
Lubrication			Not required	
Mounting orientation∗2			Unrestricted	Single: Unrestricted Double/3-position: Main valve is horizontal.
Impact/Vibration resistance∗2 **[m/s²]**			150/30	
Enclosure			IP67 (Based on IEC60529)∗3	
Coil rated voltage [DC]			24, 12 V	
Allowable voltage fluctuation [V]			±10% of rated voltage∗4	
Power consumption [W]	**Standard**		0.35 (With indicator light: 0.4)	
	High pressure type, Quick response type		0.9 (With indicator light: 0.95)	
	With power saving circuit		Standard: 0.1∗5 (With indicator light only) [Inrush 0.4, Holding 0.1], High pressure type: 0.4∗5 (With indicator light only) [Inrush 0.95, Holding 0.4]	
Surge voltage suppressor			Diode (Varistor for non-polar type)	
Indicator light			LED	

∗1 Use below 5 Hz for with the power saving circuit.

∗2 Impact resistance: No malfunction occurred when it is tested in the axial direction and at the right angles to the main valve and armature in both energized and de-energized states every once for each condition. (Values at the initial period)
Vibration resistance: No malfunction occurred in a one-sweep test between 45 and 2000 Hz. The test was performed at both energized and de-energized states in the axial direction and at the right angles to the main valve and armature. (Values at the initial period)
Refer to page 295 for the fixation of DIN rail mounting type manifold.

∗3 In the case of a metal seal, there are restrictions in the operating environment. Refer to the “Specific Product Precautions” on page 290.

∗4 Due to voltage drops by the internal circuit in S/Z type and T type (with power saving circuit), use within the allowable voltage fluctuation as follows.

S/Z type { 24 VDC: –7% to +10%; 12 VDC: –4% to +10% } T type { 24 VDC: –8% to +10%; 12 VDC: –6% to +10% }

∗5 For details, refer to page 292.

Response Time

Series	Seal type	Model	Type of actuation	Response time [ms] (at 0.5 MPa)*1					
				Standard			Quick response type		
				Without light/ surge voltage suppressor	With light/surge voltage suppressor		Without light/ surge voltage suppressor	With light/surge voltage suppressor	
					S/Z type	R/U type		S/Z type	R/U type
SY3000	Rubber seal	**SY31□0**	2-position single	15 or less	20 or less	15 or less	12 or less	15 or less	12 or less
	Metal seal	**SY31□1**		15 or less	20 or less	15 or less	12 or less	15 or less	12 or less
	Rubber seal	**SY32□0**	2-position double	12 or less	15 or less	12 or less	10 or less	13 or less	10 or less
	Metal seal	**SY32□1**		12 or less	15 or less	12 or less	10 or less	13 or less	10 or less
	Rubber seal	**SY33/4/5□0**	3-position	18 or less	22 or less	18 or less	14 or less	18 or less	14 or less
	Metal seal	**SY33/4/5□1**		18 or less	22 or less	18 or less	14 or less	18 or less	14 or less
	Rubber seal	**SY3A/B/C□0**	4-position dual 3-port valve	18 or less	22 or less	18 or less	15 or less	19 or less	15 or less
SY5000	Rubber seal	**SY51□0**	2-position single	24 or less	31 or less	24 or less	18 or less	25 or less	18 or less
	Metal seal	**SY51□1**		24 or less	31 or less	24 or less	18 or less	25 or less	18 or less
	Rubber seal	**SY52□0**	2-position double	12 or less	15 or less	12 or less	10 or less	13 or less	10 or less
	Metal seal	**SY52□1**		12 or less	15 or less	12 or less	10 or less	13 or less	10 or less
	Rubber seal	**SY53/4/5□0**	3-position	30 or less	34 or less	30 or less	24 or less	28 or less	24 or less
	Metal seal	**SY53/4/5□1**		28 or less	30 or less	28 or less	23 or less	25 or less	23 or less
	Rubber seal	**SY5A/B/C□0**	4-position dual 3-port valve	35 or less	42 or less	35 or less	28 or less	35 or less	28 or less
SY7000	Rubber seal	**SY71□0**	2-position single	47 or less	58 or less	53 or less	42 or less	52 or less	44 or less
	Metal seal	**SY71□1**		39 or less	48 or less	39 or less	34 or less	43 or less	34 or less
	Rubber seal	**SY72□0**	2-position double	18 or less	19 or less	19 or less	18 or less	17 or less	17 or less
	Metal seal	**SY72□1**		17 or less	17 or less	16 or less	16 or less	16 or less	16 or less
	Rubber seal	**SY73/4/5□0**	3-position	52 or less	54 or less	47 or less	42 or less	46 or less	40 or less
	Metal seal	**SY73/4/5□1**		38 or less	45 or less	39 or less	33 or less	38 or less	34 or less
	Rubber seal	**SY7A/B/C□0**	4-position dual 3-port valve	52 or less	60 or less	54 or less	49 or less	53 or less	48 or less

*1 Based on dynamic performance test, JIS B 8419-2010 (Coil temperature: 20°C, at rated voltage)
Since the response time of the external pilot type of the 4-position dual 3-port valve differs from the above table, please contact SMC.

Valve Weight

SY3000 series

Valve model	Seal type	Type of actuation		Weight [g]
SY3□00	Rubber seal	2-position	Single	74
			Double	83
		3-position	Closed center	87
			Exhaust center	
			Pressure center	
		4-position	Dual 3-port valve	83

Valve model	Seal type	Type of actuation		Weight [g]
SY3□01	Metal seal	2-position	Single	76
			Double	86
		3-position	Closed center	90
			Exhaust center	
			Pressure center	

Valve model	Seal type	Type of actuation		Port size 4, 2 (A, B)	Weight [g]
SY3□30-M5	Rubber seal	2-position	Single	M5 x 0.8	74
			Double		83
		3-position	Closed center		87
			Exhaust center		
			Pressure center		
		4-position	Dual 3-port valve		83
SY3□30-C2		2-position	Single	C2 ø2 One-touch fitting	82
			Double		91
		3-position	Closed center		95
			Exhaust center		
			Pressure center		
		4-position	Dual 3-port valve		91
SY3□30-C3		2-position	Single	C3 ø3.2 One-touch fitting	85
			Double		94
		3-position	Closed center		98
			Exhaust center		
			Pressure center		
		4-position	Dual 3-port valve		94
SY3□30-C4		2-position	Single	C4 ø4 One-touch fitting	77
			Double		86
		3-position	Closed center		90
			Exhaust center		
			Pressure center		
		4-position	Dual 3-port valve		86
SY3□30-C6		2-position	Single	C6 ø6 One-touch fitting	80
			Double		89
		3-position	Closed center		93
			Exhaust center		
			Pressure center		
		4-position	Dual 3-port valve		89

Valve model	Seal type	Type of actuation		Port size 4, 2 (A, B)	Weight [g]
SY3□31-M5	Metal seal	2-position	Single	M5 x 0.8	76
			Double		86
		3-position	Closed center		90
			Exhaust center		
			Pressure center		
SY3□31-C2		2-position	Single	C2 ø2 One-touch fitting	84
			Double		94
		3-position	Closed center		98
			Exhaust center		
			Pressure center		
SY3□31-C3		2-position	Single	C3 ø3.2 One-touch fitting	87
			Double		97
		3-position	Closed center		101
			Exhaust center		
			Pressure center		
SY3□31-C4		2-position	Single	C4 ø4 One-touch fitting	79
			Double		89
		3-position	Closed center		93
			Exhaust center		
			Pressure center		
SY3□31-C6		2-position	Single	C6 ø6 One-touch fitting	82
			Double		92
		3-position	Closed center		96
			Exhaust center		
			Pressure center		

SY5000 series

Valve model	Seal type	Type of actuation		Weight [g]
SY5□00	Rubber seal	2-position	Single	82
			Double	90
		3-position	Closed center	100
			Exhaust center	
			Pressure center	
		4-position	Dual 3-port valve	90

Valve model	Seal type	Type of actuation		Weight [g]
SY5□01	Metal seal	2-position	Single	91
			Double	101
		3-position	Closed center	111
			Exhaust center	
			Pressure center	

Valve model	Seal type	Type of actuation		Port size 4, 2 (A, B)	Weight [g]
SY5□30-01	Rubber seal	2-position	Single	1/8	102
			Double		110
		3-position	Closed center		120
			Exhaust center		
			Pressure center		
		4-position	Dual 3-port valve		110
SY5□30-C4		2-position	Single	C4 ø4 One-touch fitting	115
			Double		123
		3-position	Closed center		133
			Exhaust center		
			Pressure center		
		4-position	Dual 3-port valve		123
SY5□30-C6		2-position	Single	C6 ø6 One-touch fitting	110
			Double		118
		3-position	Closed center		128
			Exhaust center		
			Pressure center		
		4-position	Dual 3-port valve		118
SY5□30-C8		2-position	Single	C8 ø8 One-touch fitting	99
			Double		107
		3-position	Closed center		117
			Exhaust center		
			Pressure center		
		4-position	Dual 3-port valve		107

Valve model	Seal type	Type of actuation		Port size 4, 2 (A, B)	Weight [g]
SY5□31-01	Metal seal	2-position	Single	1/8	111
			Double		121
		3-position	Closed center		131
			Exhaust center		
			Pressure center		
SY5□31-C4		2-position	Single	C4 ø4 One-touch fitting	124
			Double		134
		3-position	Closed center		144
			Exhaust center		
			Pressure center		
SY5□31-C6		2-position	Single	C6 ø6 One-touch fitting	120
			Double		130
		3-position	Closed center		140
			Exhaust center		
			Pressure center		
SY5□31-C8		2-position	Single	C8 ø8 One-touch fitting	108
			Double		118
		3-position	Closed center		128
			Exhaust center		
			Pressure center		

Valve Weight

SY7000 series

Valve model	Seal type	Type of actuation		Weight [g]
SY7□00	Rubber seal	2-position	Single	110
			Double	118
		3-position	Closed center	133
			Exhaust center	
			Pressure center	
		4-position	Dual 3-port valve	114

Valve model	Seal type	Type of actuation		Weight [g]
SY7□01	Metal seal	2-position	Single	122
			Double	133
		3-position	Closed center	150
			Exhaust center	
			Pressure center	

Valve model	Seal type	Type of actuation		Port size 4, 2 (A, B)	Weight [g]
SY7□30-02	Rubber seal	2-position	Single	1/4	125
			Double		133
		3-position	Closed center		147
			Exhaust center		
			Pressure center		
		4-position	Dual 3-port valve		129
SY7□30-C6		2-position	Single	C6 ø6 One-touch fitting	163
			Double		171
		3-position	Closed center		186
			Exhaust center		
			Pressure center		
		4-position	Dual 3-port valve		167
SY7□30-C8		2-position	Single	C8 ø8 One-touch fitting	151
			Double		159
		3-position	Closed center		174
			Exhaust center		
			Pressure center		
		4-position	Dual 3-port valve		155
SY7□30-C10		2-position	Single	C10 ø10 One-touch fitting	136
			Double		144
		3-position	Closed center		159
			Exhaust center		
			Pressure center		
		4-position	Dual 3-port valve		140
SY7□30-C12		2-position	Single	C12 ø12 One-touch fitting	146
			Double		154
		3-position	Closed center		169
			Exhaust center		
			Pressure center		
		4-position	Dual 3-port valve		150

Valve model	Seal type	Type of actuation		Port size 4, 2 (A, B)	Weight [g]
SY7□31-02	Metal seal	2-position	Single	1/4	136
			Double		148
		3-position	Closed center		164
			Exhaust center		
			Pressure center		
SY7□31-C6		2-position	Single	C6 ø6 One-touch fitting	174
			Double		186
		3-position	Closed center		202
			Exhaust center		
			Pressure center		
SY7□31-C8		2-position	Single	C8 ø8 One-touch fitting	162
			Double		174
		3-position	Closed center		190
			Exhaust center		
			Pressure center		
SY7□31-C10		2-position	Single	C10 ø10 One-touch fitting	148
			Double		159
		3-position	Closed center		176
			Exhaust center		
			Pressure center		
SY7□31-C12		2-position	Single	C12 ø12 One-touch fitting	157
			Double		169
		3-position	Closed center		185
			Exhaust center		
			Pressure center		

SY3000/5000/7000 Series
Valve Construction

Rubber Seal

2-position single

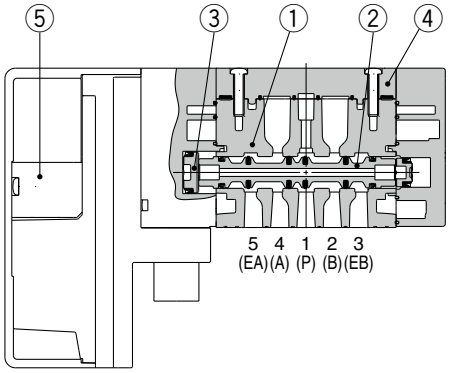

Top ported

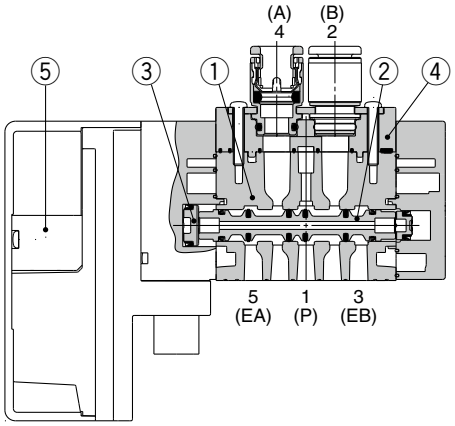

2-position single

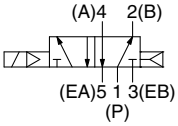

2-position double

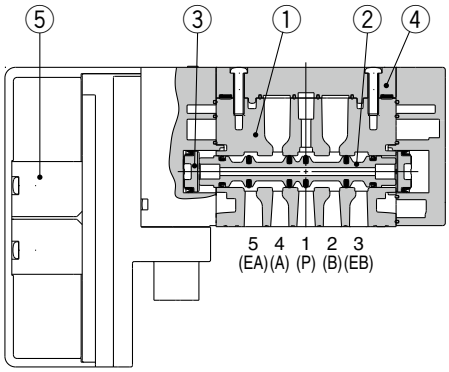

2-position double

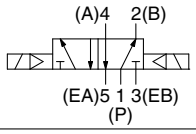

3-position closed center/exhaust center/pressure center

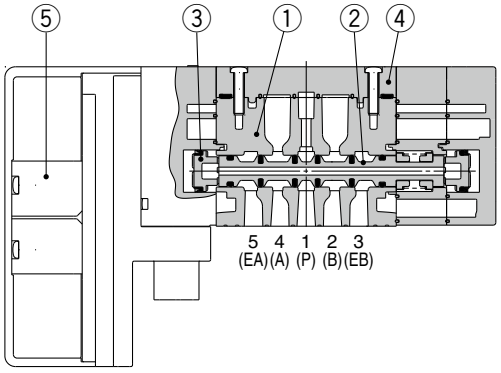

3-position closed center

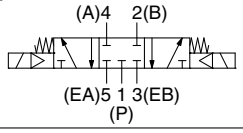

3-position exhaust center

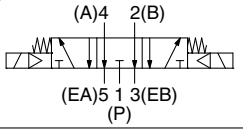

3-position pressure center

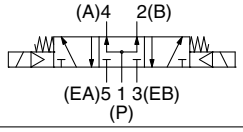

Component Parts

No.	Description	Material	Note
1	**Body**	SY3000: Zinc die-casted SY5000/SY7000: Aluminum die-casted	
2	**Spool valve**	Special resin/HNBR (3-position valve: Aluminum/HNBR)	
3	**Piston**	Resin	
4	**Body cover assembly**	Resin	For the side/bottom-ported type
	Port block assembly	SY3000: Resin SY5000: Zinc die-casted (Thread piping) SY5000: Resin (Fitting) SY7000: Aluminum die-casted	For the top-ported type
5	**Pilot valve assembly**	—	Refer to page 23.

Rubber Seal

4-position dual 3-port valve

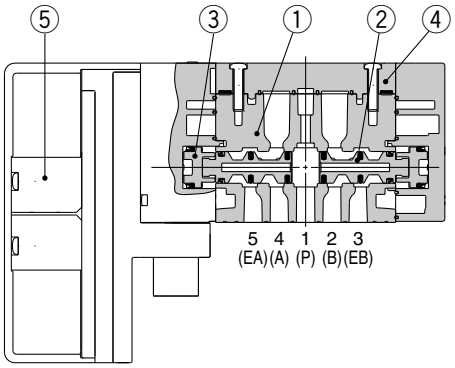

4-position dual 3-port valve

N.C. valve x 2 pcs.

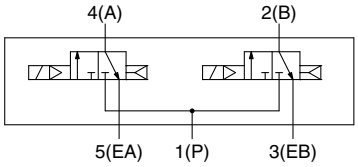

N.O. valve x 2 pcs.

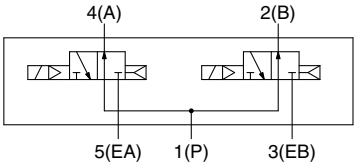

N.C. valve, N.O. valve 1 pc. of each

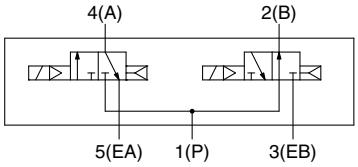

2-position double with back pressure check valve (Built-in valve type)

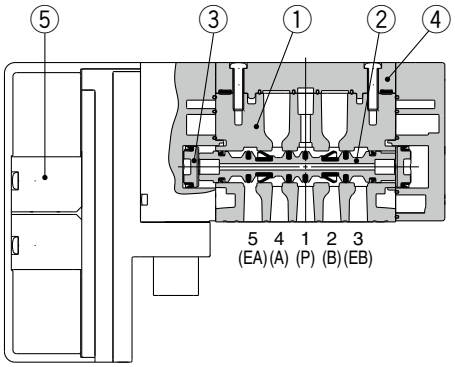

2-position double with back pressure check valve

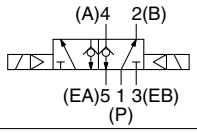

∗ The built-in valve type back pressure check valve is not available for the SY7000.

4-position dual 3-port valve with back pressure check valve (Built-in valve type)

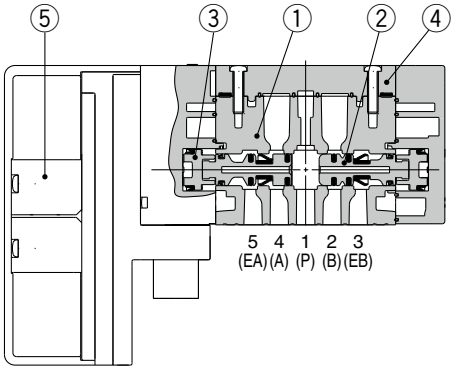

4-position dual 3-port valve with back pressure check valve

N.C. valve x 2 pcs.

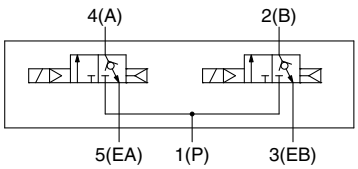

N.O. valve x 2 pcs.

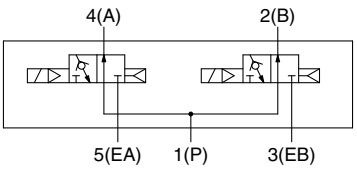

N.C. valve, N.O. valve 1 pc. of each

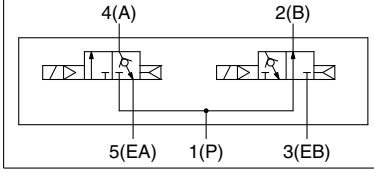

∗ The built-in valve type back pressure check valve is not available for the SY7000.

Metal Seal

2-position single

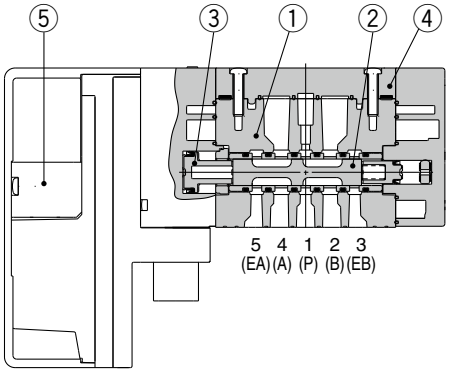

Top ported

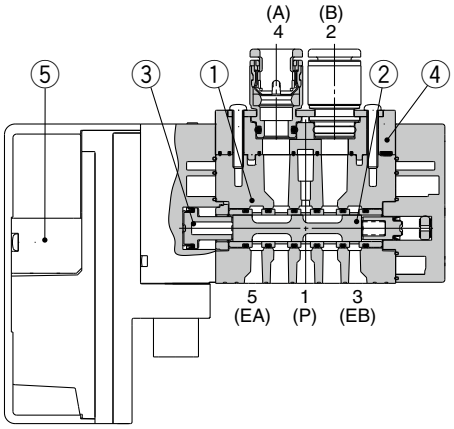

2-position single

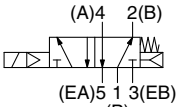

2-position double

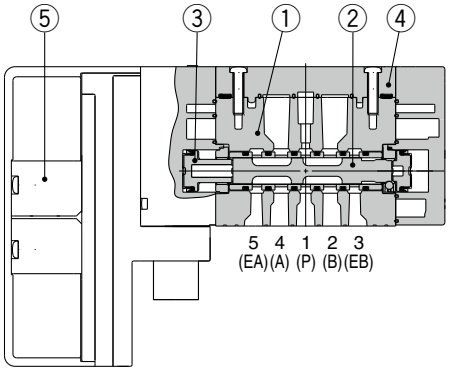

2-position double

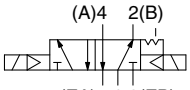

3-position closed center/exhaust center/pressure center

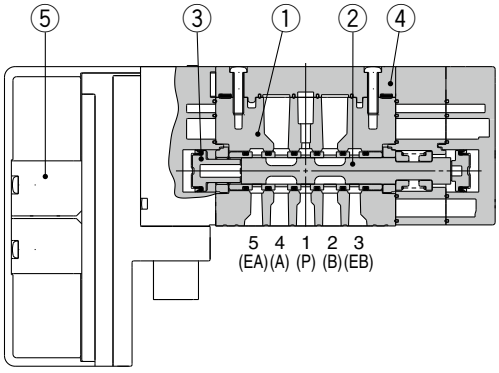

3-position closed center

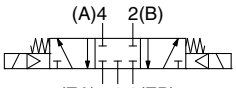

3-position exhaust center

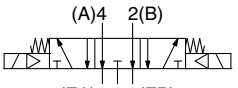

3-position pressure center

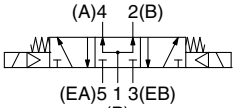

Component Parts

No.	Description	Material	Note
1	**Body**	SY3000: Zinc die-casted SY5000/7000: Aluminum die-casted	
2	**Spool, Sleeve**	Stainless steel/HNBR	
3	**Piston**	Resin	
4	**Body cover assembly**	Resin	For the side/bottom-ported type
	Port block assembly	SY3000: Resin SY5000: Zinc die-casted (Thread piping) SY5000: Resin (Fitting) SY7000: Aluminum die-casted	For the top-ported type
5	**Pilot valve assembly**	—	Refer to page 23.

SY3000/5000/7000 Series
Valve Replacement Parts

How to Order Port Block Assembly

SY □0V-6A□-□-□□

Series

3	3000
5	5000
7	7000

Pilot type

Nil	Internal pilot
R	External pilot

Option for mounting

Nil	Standard (Valve mounting screw without drop prevention)
1	Drop prevention type valve mounting screw

Thread type

Nil	Rc
F	G
N	NPT
T	NPTF

∗ Except M5

A, B port size
Thread piping

Symbol	Port size	Applicable series
M5	M5 x 0.8	**SY3000**
01	1/8	**SY5000**
02	1/4	**SY7000**

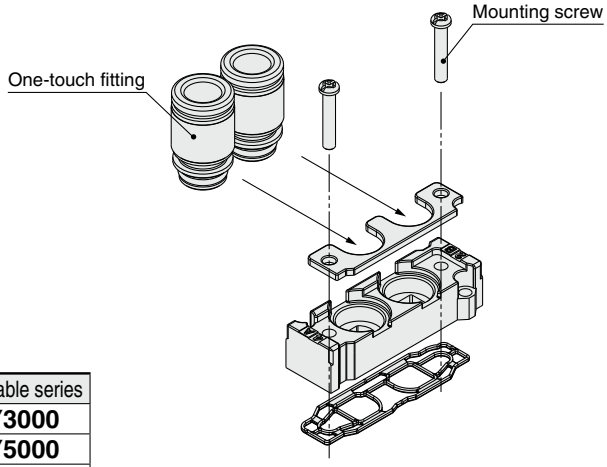

Metric size (One-touch fitting)

Symbol	Port size	Applicable series		
		SY3000	**SY5000**	**SY7000**
C2	ø2	●	—	—
C3	ø3.2	●	—	—
C4	ø4	●	●	—
C6	ø6	●	●	●
C8	ø8	—	●	●
C10	ø10	—	—	●
C12	ø12	—	—	●

Inch size (One-touch fitting)

Symbol	Port size	Applicable series		
		SY3000	**SY5000**	**SY7000**
N1	ø1/8"	●	—	—
N3	ø5/32"	●	●	—
N7	ø1/4"	●	●	●
N9	ø5/16"	—	●	●
N11	ø3/8"	—	—	●

● Possible to replace only the One-touch fitting

Port size		SY3000	SY5000	SY7000
Metric size	ø2	VVQ1000-50A-C2	—	—
	ø3.2	VVQ1000-50A-C3	—	—
	ø4	VVQ1000-50A-C4	VVQ1000-51A-C4	—
	ø6	VVQ1000-50A-C6	VVQ1000-51A-C6	VVQ2000-51A-C6
	ø8	—	VVQ1000-51A-C8	VVQ2000-51A-C8
	ø10	—	—	VVQ2000-51A-C10
	ø12	—	—	KQ2H12-17-X224
Inch size	ø1/8"	VVQ1000-50A-N1	—	—
	ø5/32"	VVQ1000-50A-N3	VVQ1000-51A-N3	—
	ø1/4"	VVQ1000-50A-N7	VVQ1000-51A-N7	VVQ2000-51A-N7
	ø5/16"	—	VVQ1000-51A-N9	VVQ2000-51A-N9
	ø3/8"	—	—	VVQ2000-51A-N11

Refer to pages 295 and 296 for how to replace the port block assembly, One-touch fitting, and body cover assembly.

Body Cover Assembly

∗ Used when the top-ported type is changed to the side or bottom-ported type

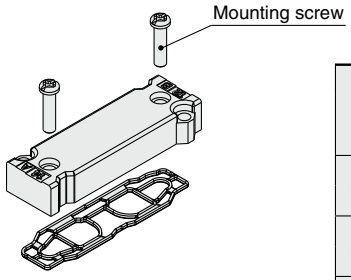

Series		Part no.	
		Standard (Valve mounting screw without drop prevention)	Drop prevention type valve mounting screw
SY3000	Internal pilot	SY30V-16A	SY30V-16A-1
	External pilot	SY30V-16AR	SY30V-16AR-1
SY5000	Internal pilot	SY50V-16A	SY50V-16A-1
	External pilot	SY50V-16AR	SY50V-16AR-1
SY7000	Internal pilot	SY70V-16A	SY70V-16A-1
	External pilot	SY70V-16AR	SY70V-16AR-1

∗ The part number is not indicated on the product.

How to Order Pilot Valve Assembly (With a gasket and two mounting screws)

V112□□–□A

Pilot valve option

Nil	Standard (0.7 MPa)
B	Quick response type (0.7 MPa)
K	High pressure type (1.0 MPa)∗1

∗1 Only the metal seal type is available for the high pressure type. (1.0 MPa)

Coil type

Nil	Standard
T	With power saving circuit

Rated voltage

5	24 VDC
6	12 VDC

⚠Caution

1. The coil specification and voltage (including light/surge voltage suppressor) cannot be changed by changing the pilot valve assembly.
2. When selecting the coil type with power saving circuit, it is not possible to change to high pressure/power saving circuit type.

How to replace pilot valves

Pilot cover assembly

Series	Part no.
SY3000	SY30V-25A
SY5000	SY50V-25A
SY7000	

∗ Pilot cover x 1 + B tight flat head screw x 1

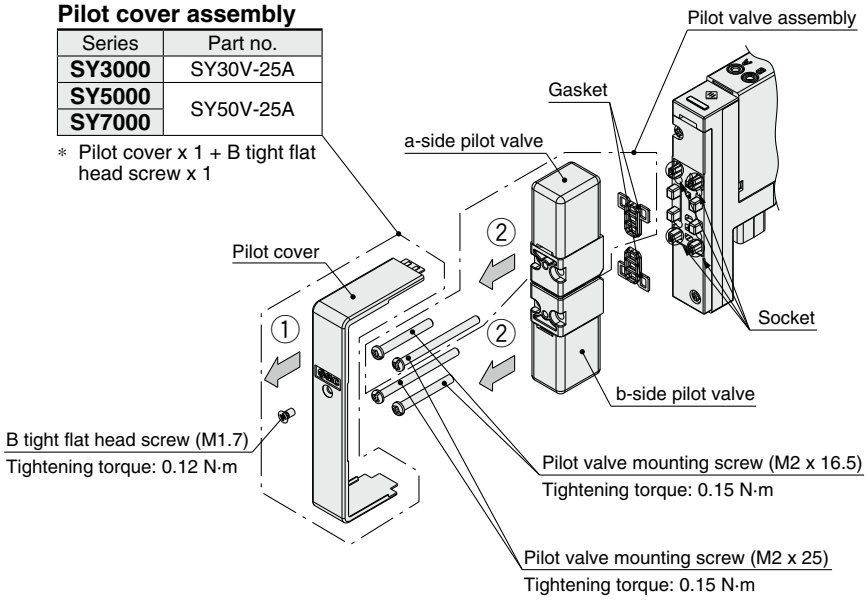

- Loosen B tight flat head screw to remove the pilot cover in the direction indicated by the arrow ①.
- Remove the pilot valve mounting screws.
- Remove the pilot valve in the direction indicated by the arrow ②.

∗ Assemble by following the removal procedure in reverse.

∗ Ensure the gasket is mounted, and take care not to bend the socket.
∗ Be noted for mounting that there are two types of lengths for the pilot valve mounting screws.

SY5000/7000 Series

With Residual Pressure Release Valve

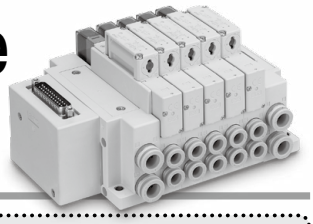

Mountable manifold
SS5Y5/7-50/51 type manifold
SS5Y5/7-(M)10/11 type manifold
Sub-plate single unit (Except top-ported type)

How to Order (With mounting screw)

SY 5 3 0 0 □ □ – 5 □ □ 1 – E – □ – □ □ □

❶ ❷ ❸ ❹ ❺ ❻

Series

5	SY5000
7	SY7000

Type of actuation

3	3-position closed center*1

*1 Only the closed center type is available.

Base mounted
(The top-ported type is not available.)

With residual pressure release valve

E	With residual pressure release valve*1

*1 Mounting screw types, hexagon socket head cap screw B and drop prevention type K, H are not available.

⚠ Protective class class Ⅲ (Mark: ⟨Ⅲ⟩)

Thread type

Port size

Port location

Wiring specification

With sub-plate

With sub-plate
* Make selections for items 15 to 18 on page 282.

❶ Seal type

0	Rubber seal
1	Metal seal

❷ Pilot valve option

Nil	Standard (0.7 MPa)
B	Quick response type (0.7 MPa)
K*1	High pressure type (1.0 MPa)

*1 Only the metal seal type is available for the high pressure type.

❸ Coil type

Nil	Standard
T	With power saving circuit (Continuous duty type)

* Be sure to select the power saving circuit type if the valve is to be continuously energized for long periods of time.
* Be careful of the energizing time when the power saving circuit is selected. Refer to page 292 for details.

❹ Rated voltage

5	24 VDC
6	12 VDC

* The applicable rated voltage varies depending on the manifold wiring type. Refer to the "How to Order Manifolds" pages.

❺ Light/surge voltage suppressor and common specification

Symbol	With light	Surge voltage suppressor	Common specification
Nil	—	—	Non-polar
R	—	●	
U	●		
S	—		Positive common
Z	●		
NS	—		Negative common
NZ	●		

* For the non-polar type, be careful of surge voltage intrusion. Refer to page 293 for details. (Excludes when an SI unit manifold is used)
* Only "Z" and "NZ" types are available with a power saving circuit.

❻ Manual override

Nil: Non-locking push type 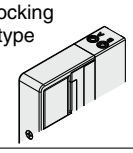	**D**: Push-turn locking slotted type 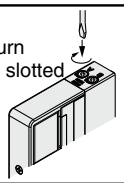
E: Push-turn locking lever type 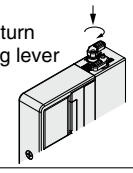	**F**: Slide locking type 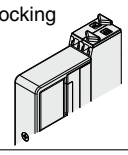

* Refer to page 34 for the safety slide locking manual override.
* **When ordering a valve individually, the base gasket is not included.**
Since the base gasket is attached to the manifold, please order the base gasket separately if it is needed for maintenance.
Refer to page 198 or 266 for base gasket part numbers.
Refer to Table 1 for mounting screw part numbers.

Table 1. Valve mounting screw

SY5000	SY7000
SY5000-221-2A (2 pcs.)	SY7000-221-10A (3 pcs.)

Valve Specifications

Valve construction		Rubber seal	Metal seal
		3-position closed center valve with residual pressure release valve*1	
Fluid		Air	
Operating pressure range [MPa]*2		0.3 to 0.7	0.3 to 0.7 (High pressure: 0.3 to 1)
Weight [g]	**SY5000**	117	128
	SY7000	156	177

*1 Rubber seal is used for the residual pressure release valve.
*2 Internal pilot type only
* Other specifications are common to the valve specifications on page 15.
* When using in combination with an individual SUP/EXH spacer or an interface regulator, the length of the required mounting screws will differ. Please contact SMC for details.

Symbol

<When the 1(P) port is exhausted>

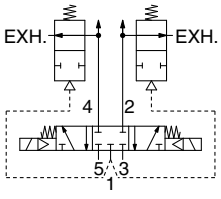

<When the 1(P) port is pressurized>

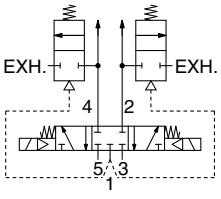

A mechanism is used that exhausts the pressure of the cylinder port when the P port supply pressure of the 3-position closed center valve is exhausted.

Dimensions

SY5000

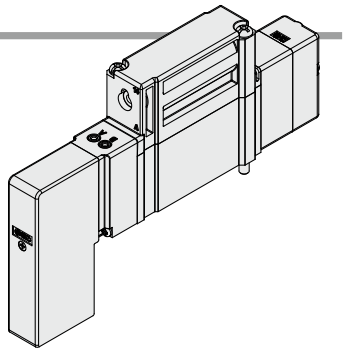

SY7000

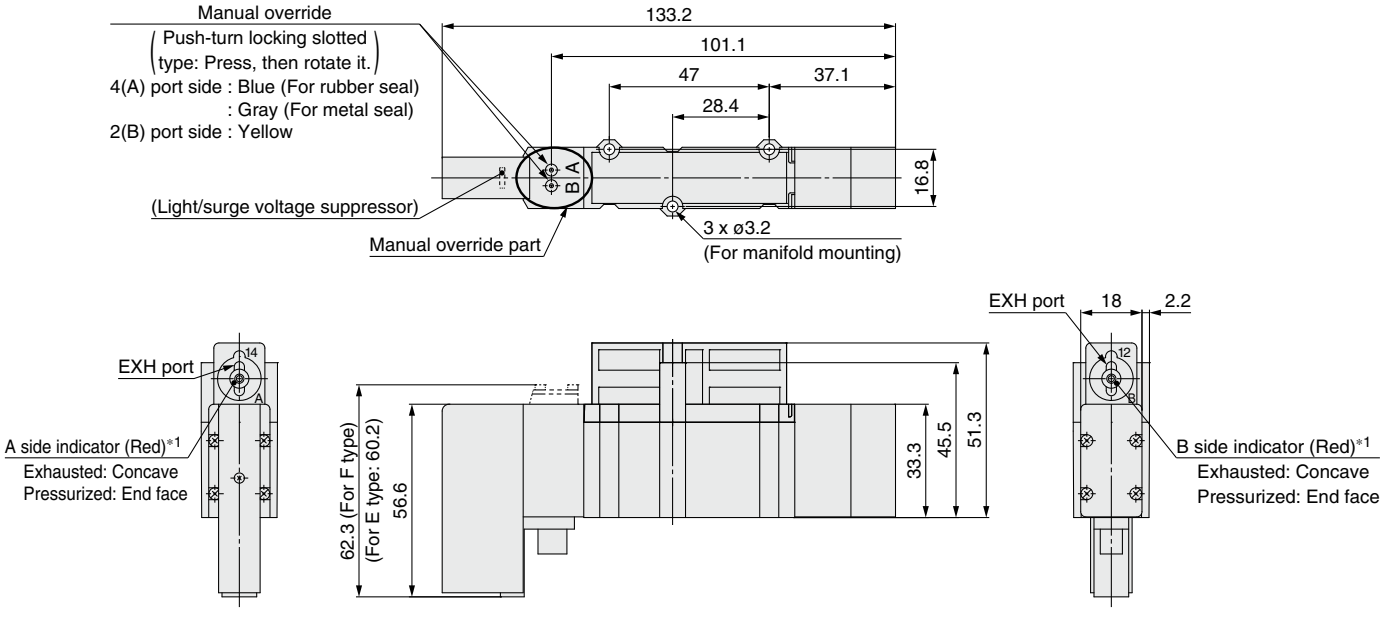

*1 The indicator shows the pressurization status. Do not push it.

SY3000/5000 Series

Only for External Pilot

Vacuum Release Valve with Restrictor

RoHS

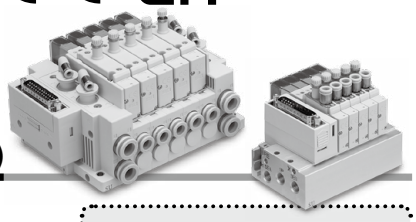

Mountable manifold [External pilot]
SS5Y3/5-50/52 type manifold
SS5Y3/5-(M)10/11/12 type manifold
Sub-plate single unit (Except SS5Y3-11 type)

How to Order (With mounting screw)

Side ported/ Bottom ported

SY 3 A 0 R □ – 5 □ □ 1 – □

Top ported

SY 3 A 3 R □ – 5 □ □ 1 – C6 – □

❶ ❷ ❸ ❹ ❺ ❻ ❼ ❽

Thread type
Port size
Port location
Wiring specification

With sub-plate
∗ Make selections for items 15 to 18 on page 282.

With sub-plate

❶ Series

3	SY3000
5	SY5000

❷ Pilot type

R	External pilot

❹ Rated voltage

5	24 VDC
6	12 VDC

❻ Manual override

Nil: Non-locking push type

D: Push-turn locking slotted type

E: Push-turn locking lever type

F: Slide locking type

∗ Refer to page 34 for the safety slide locking manual override.

❸ Coil type

Nil	Standard
T	With power saving circuit (Continuous duty type)

∗ Be sure to select the power saving circuit type if the valve is to be continuously energized for long periods of time.
∗ Be careful of the energizing time when the power saving circuit is selected.
Refer to page 292 for details.

Protective class
class Ⅲ (Mark: ⧼Ⅲ⧽)

❺ Light/surge voltage suppressor and common specification

Symbol	With light	Surge voltage suppressor	Common specification
Nil	—	—	Non-polar
R	—	●	
U	●		
S	—		Positive common
Z	●		
NS	—		Negative common
NZ	●		

∗ For the non-polar type, be careful of surge voltage intrusion. Refer to page 293 for details. (Excludes when an SI unit manifold is used)
∗ Only "Z" and "NZ" types are available with a power saving circuit.

How to Order Manifold Assembly

Example (SS5Y3-10F1-□□R)

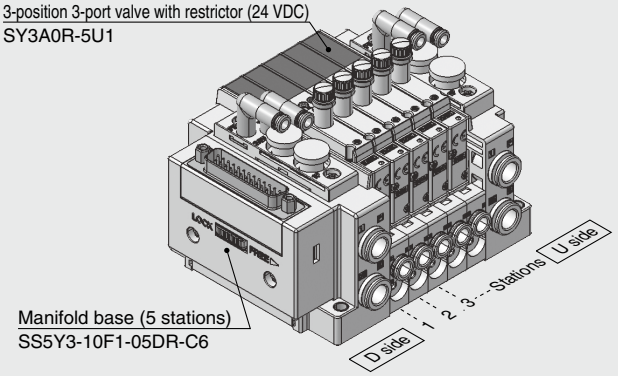

SS5Y3-10F1-05DR-C6···1 set (Type 10 5-station manifold base part no.)
∗SY3A0R-5U1 (3-position 3-port with restrictor part no.)····5 sets
→ The asterisk denotes the symbol for the assembly. Prefix it to the part numbers of the valve, etc.

- For the valve arrangement, the valve closest to the D side is considered the 1st station.
- Under the manifold part number, state the valves to be mounted in order starting with the 1st station as shown in the figure above. If the arrangement becomes too complicated, specify the details on a manifold specification sheet.

❼ B port size

One-touch fitting (Metric size)

Symbol	B port	SY3000	SY5000
C4	ø4 One-touch fitting	●	●
C6	ø6 One-touch fitting	●	●
C8	ø8 One-touch fitting	—	●

One-touch fitting (Inch size)

Symbol	B port	SY3000	SY5000
N3	ø5/32" One-touch fitting	●	●
N7	ø1/4" One-touch fitting	●	●
N9	ø5/16" One-touch fitting	—	●

∗ When selecting the port size for each station, specify on a manifold specification sheet separately.
∗ When mounting on the manifold base or sub-plate, the A port is plugged. When a manifold base or sub-plate is ordered separately, mount a plug on the A port.

❽ Type of mounting screw

Nil	Round head combination screw
B	Hexagon socket head cap screw

∗ **When ordering a valve individually, the base gasket is not included.**
Since the base gasket is attached to the manifold, please order the base gasket separately if it is needed for maintenance.
Refer to page 198 or 266 for base gasket and mounting screw part numbers.
∗ "B" and "H" cannot be selected for the individual SUP/EXH spacer assembly or interface regulator.

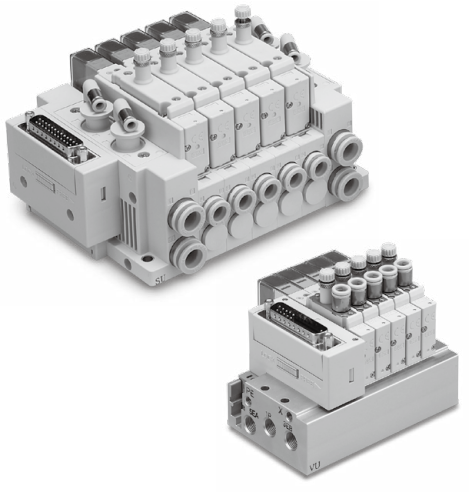

Valve Specifications

Valve construction		3-position 3-port valve with restrictor
Seal		Rubber seal
Fluid		Air
Type of actuation		Normally closed
Operating pressure range [MPa]	**Release pressure port 1(P)**	0 to 0.6
	Vacuum pressure port 3(EB), 3/5(E)	–100 kPa to 0.7∗1
	Pilot X port	Release pressure + 0.1 or more (Min. 0.25) to 0.7
Restrictor operation		Manual

∗1 Can be used with positive pressure to suit the application
∗ Other specifications are common to the valve specifications on page 15.
∗ Quick response type is not available.

Weight

Valve model	Weight [g]
SY3A0R	90

Valve model	Port size	Weight [g]
	2(B) port	
SY3A3R	C4	91
	C6	93

Valve model	Weight [g]
SY5A0R	94

Valve model	Port size	Weight [g]
	2(B) port	
SY5A3R	C4	118
	C6	115
	C8	121

Symbol

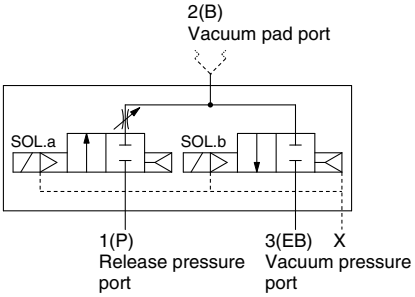

Response Time

Valve model	Without light/surge voltage suppressor	With light/surge voltage suppressor	
		S/Z type	R/U type
SY3A□R	18	26	18
SY5A□R	27	32	27

∗ P = 0.1 MPa X = 0.5 MPa

Manifold Flow Rate Characteristics∗1

Flow Rate Characteristics (When restrictor is fully open)

① Plug-in Metal Base

Manifold type	Port size		Valve flow rate characteristics			
	1, 3 (P, EB)	2 (B)	1→2 (P→B)		2→3 (B→EB)	
			C [dm³/(s·bar)]	b	C [dm³/(s·bar)]	b
SS5Y3-50R (Side ported)	1/8	C6	0.7	0.24	1.0	0.16
SS5Y3-52R (Top ported)	1/8	C6	1.0	0.25	1.1	0.25
SS5Y5-50R (Side ported)	1/4	C8	1.0	0.30	2.3	0.10
SS5Y5-52R (Top ported)	1/4	C8	1.4	0.16	2.4	0.14

② Plug-in Connector Connecting Base

Manifold type	Port size		Valve flow rate characteristics			
	1, 3 (P, EB)	2 (B)	1→2 (P→B)		2→3 (B→EB)	
			C [dm³/(s·bar)]	b	C [dm³/(s·bar)]	b
SS5Y3-10R (Side ported)	C8	C6	0.7	0.36	1.2	0.22
SS5Y3-12R (Top ported)	C8	C6	1.0	0.26	1.2	0.20
SS5Y5-10R (Side ported)	C10	C8	1.0	0.20	2.9	0.17
SS5Y5-11R (Bottom ported)	C10	C8	1.0	0.30	3.3	0.24
SS5Y5-12R (Top ported)	C10	C8	1.4	0.15	2.6	0.24

∗1 The value is for manifold base with 5 stations.
∗ Calculation of effective area S and sonic conductance C: S = 5.0 x C

Restrictor Flow Rate Characteristics [Fluid passage: 1(P)→2(B)]

SY3A0R

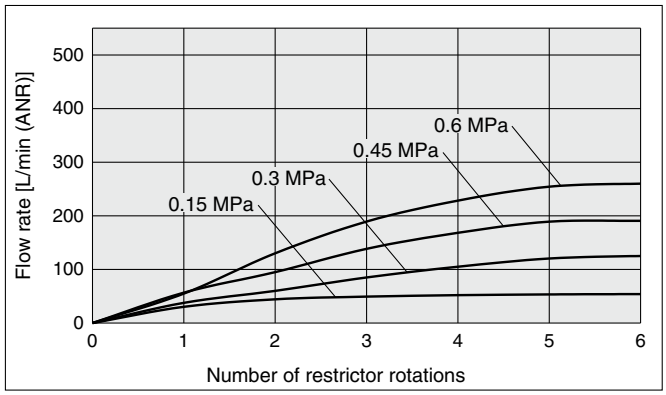

SY5A0R

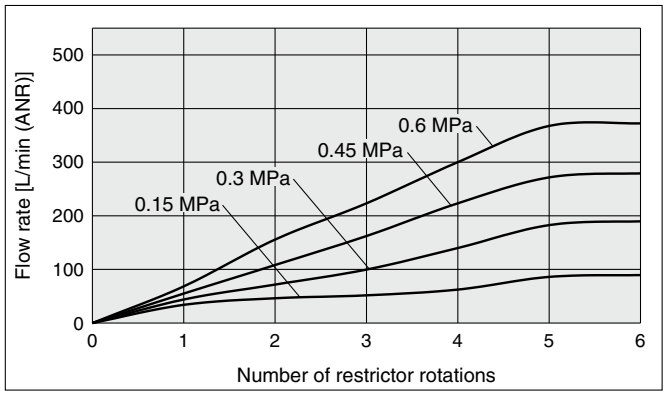

SY3A3R-C4

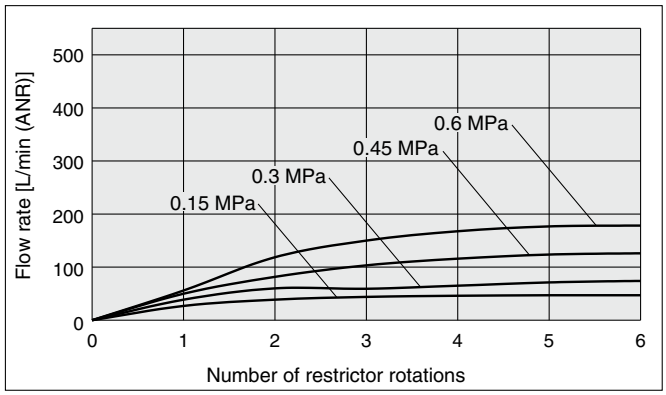

SY5A3R-C4

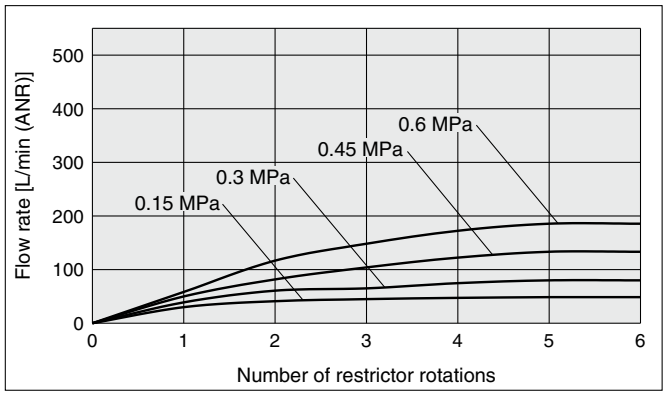

SY3A3R-C6

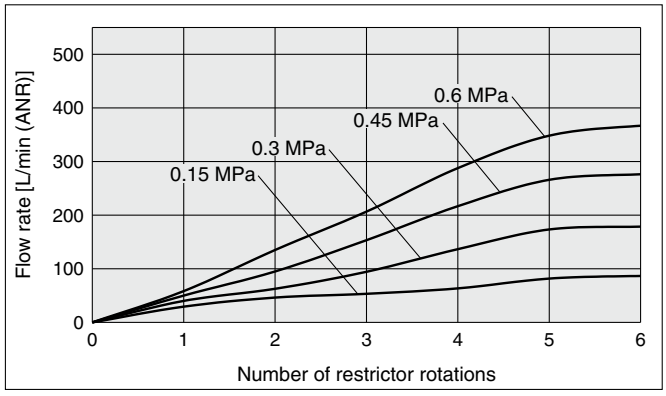

SY5A3R-C6

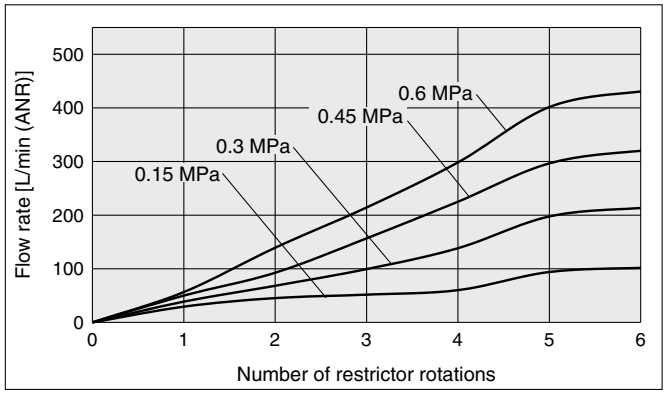

SY5A3R-C8

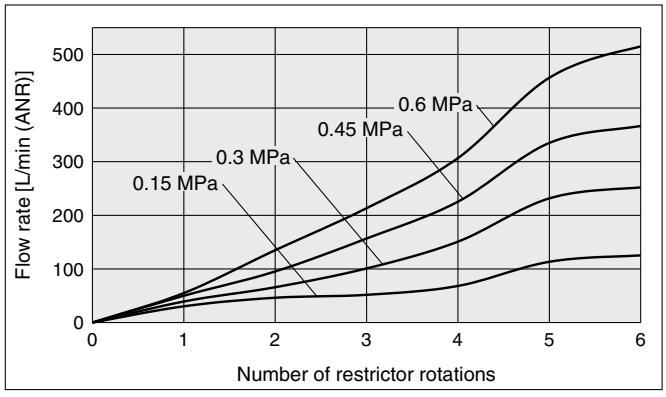

Circuit Example

<Example 1: When the 2-position double solenoid valve is combined with the individual EXH spacer>

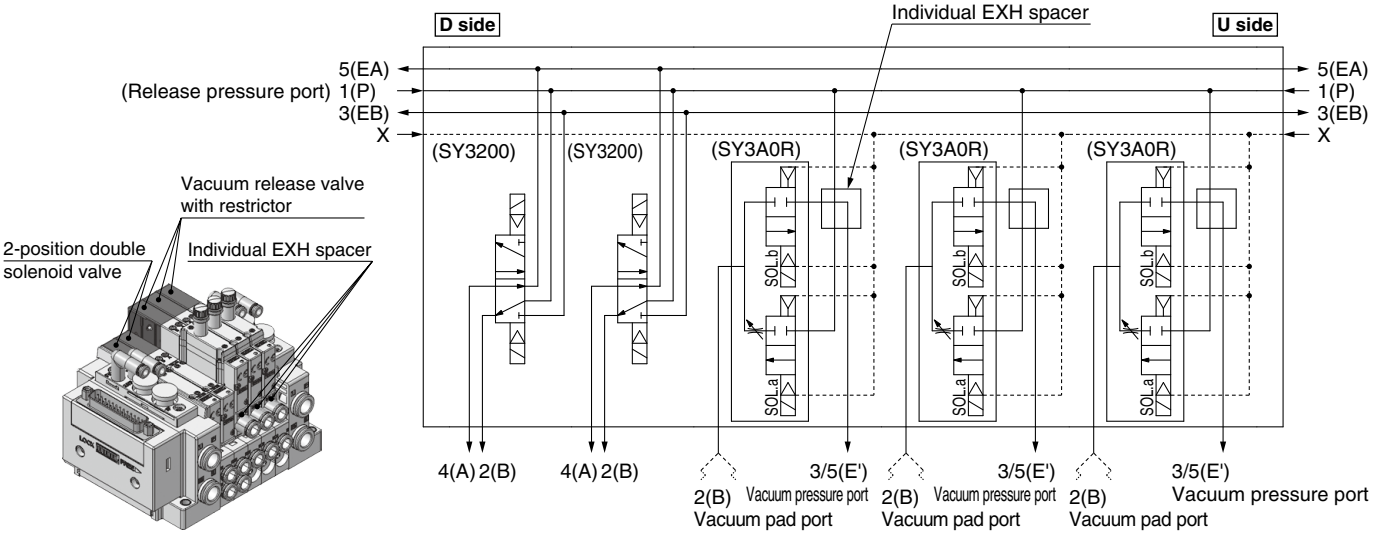

<Example 2: When the 2-position double solenoid valve is combined with the individual EXH block and blocking disk>

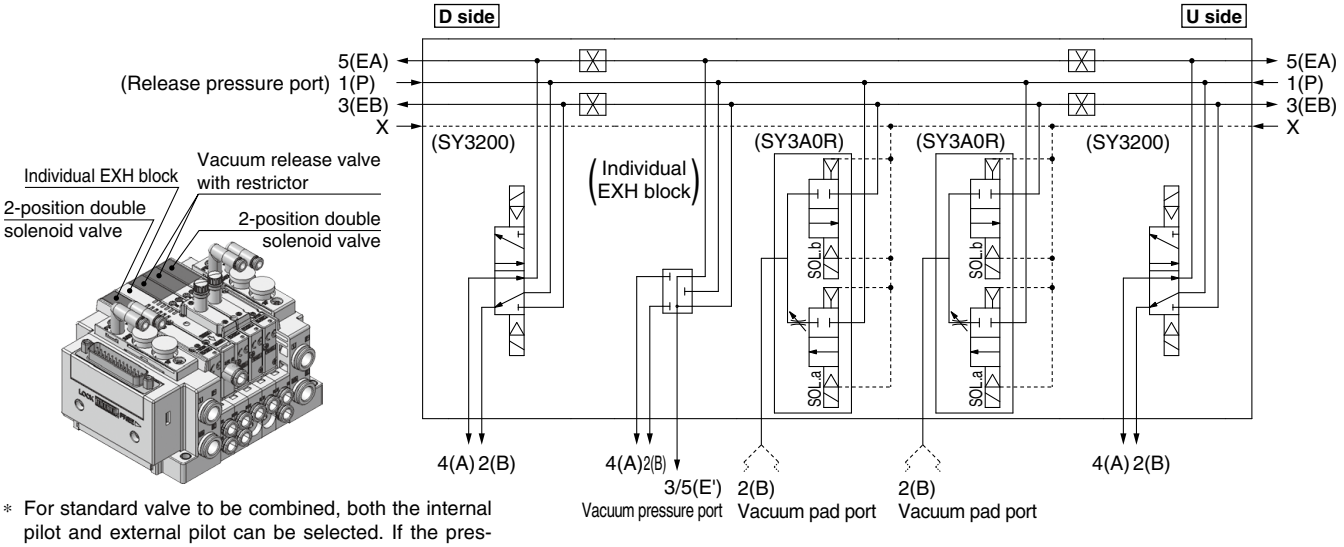

* For standard valve to be combined, both the internal pilot and external pilot can be selected. If the pressure drop may occur when the 1(P) port releases the vacuum, use the external pilot type.

Dimensions: SY3000

Side ported SY3A0R

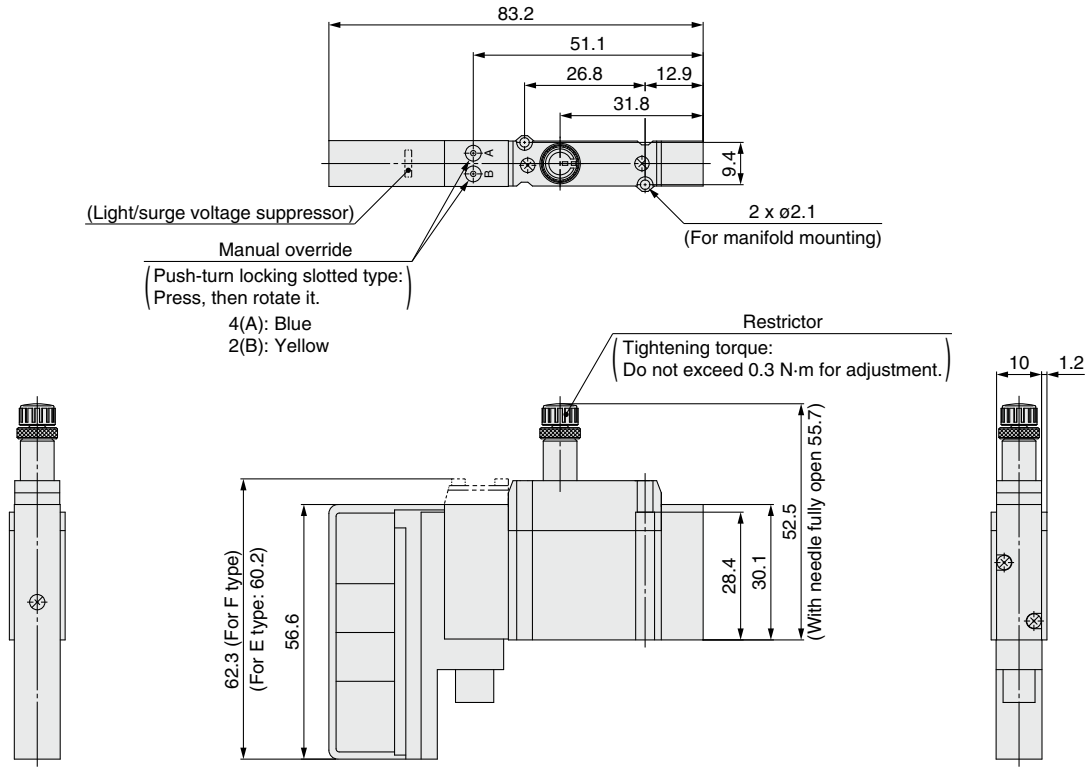

Top ported SY3A3R

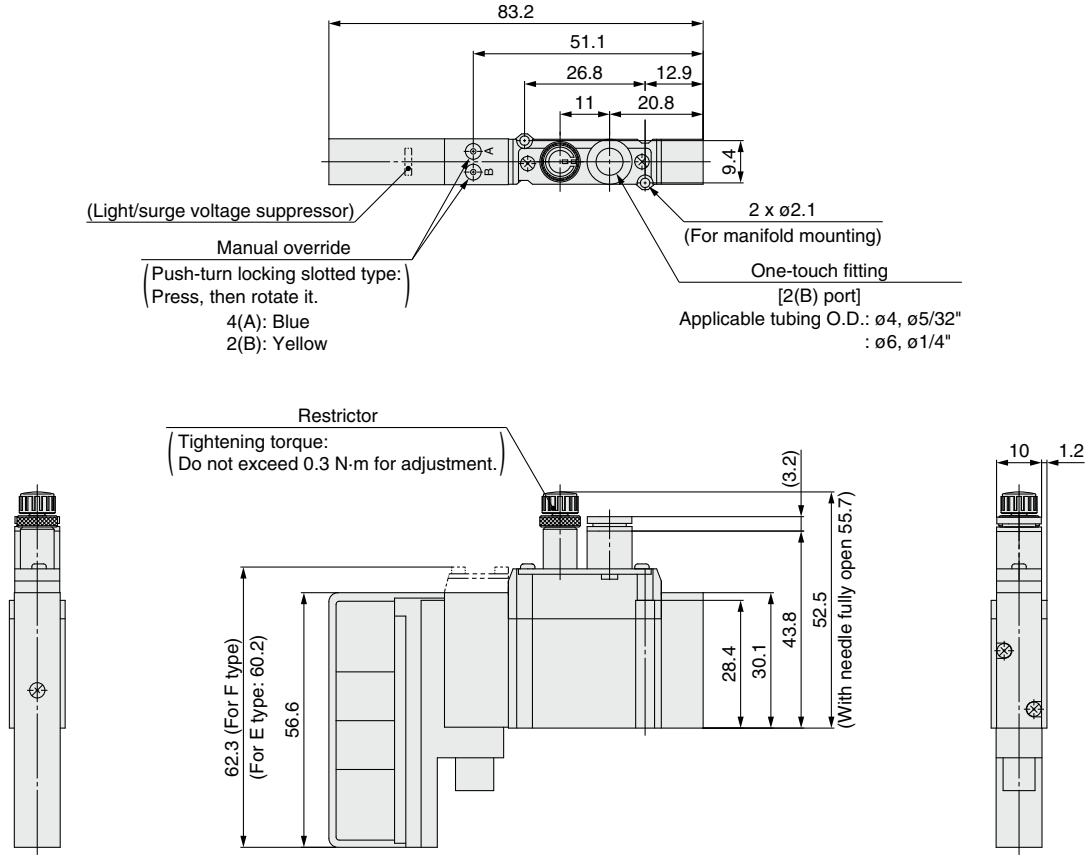

Dimensions: SY5000

Side ported
Bottom ported
SY5A0R

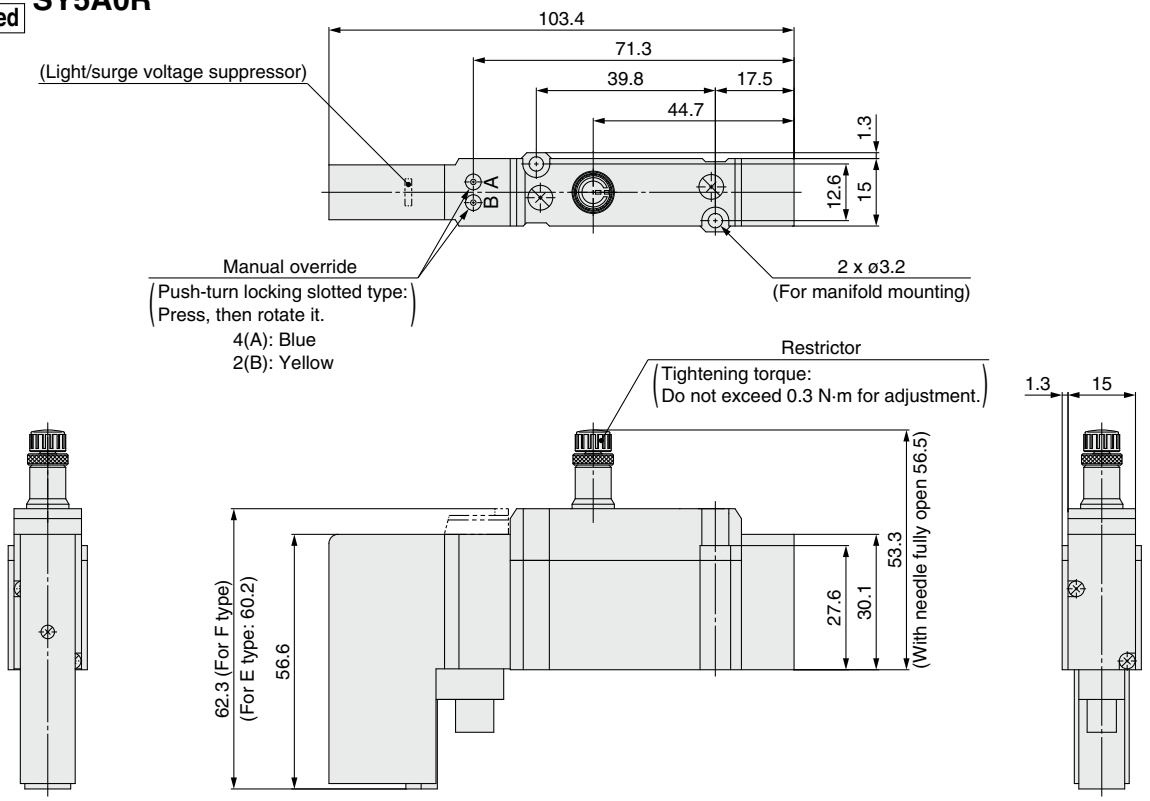

Top ported
SY5A3R

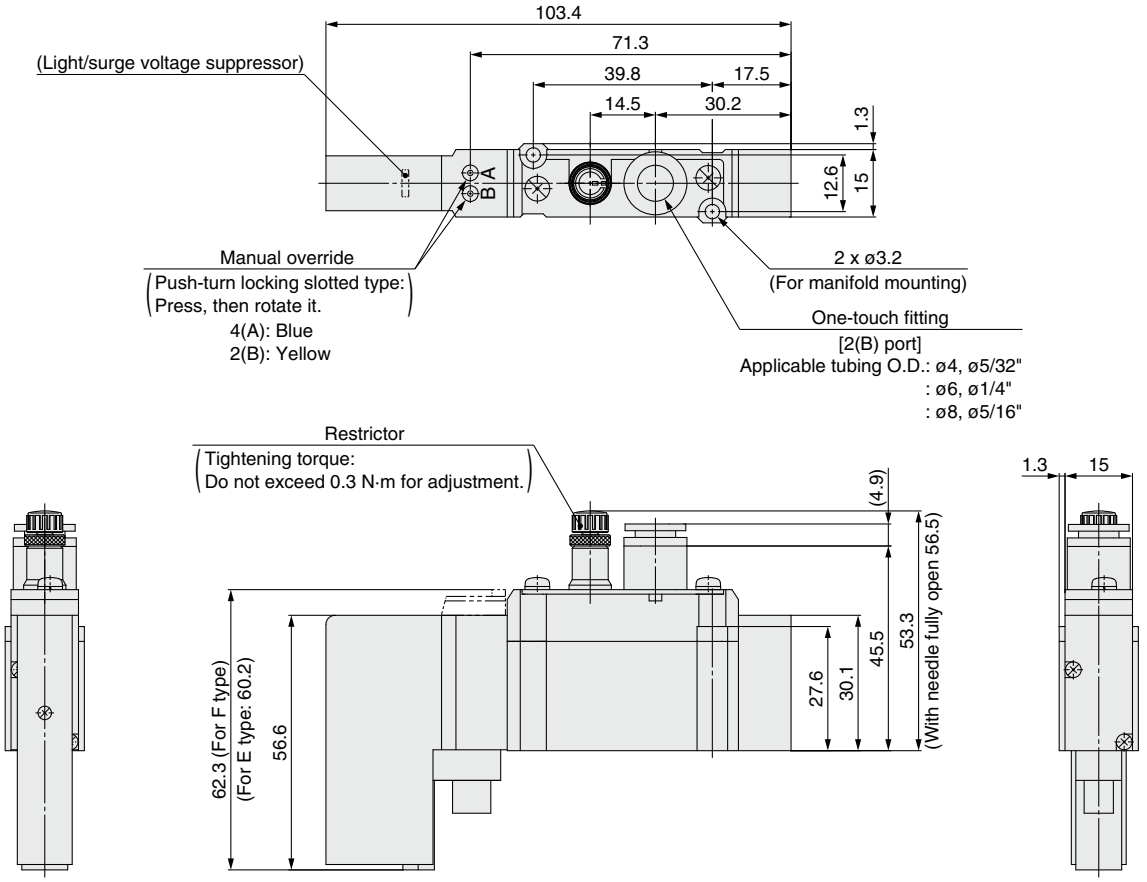

SY5000/7000 Series
Valve with Pressure Sensor

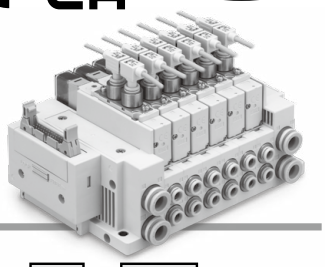

Mountable manifold
Metal base: SS5Y5/7-50/51 type manifold
Connector connecting base: SS5Y5/7-10/11 type manifold

How to Order Valves (With mounting screw)

SY 5 1 3 0 □ □ □ □ – 5 □ □ 1 – C6 – □ – P2

❶ ❷ ❸ ❹ ❺ ❻ ❼ ❽ ❾ ❿ ⓫ ⓬ ⓭

• Top ported

❶ Series

5	SY5000
7	SY7000

❷ Type of actuation

1	2-position	Single
2		Double
3	3-position	Closed center
4		Exhaust center
5		Pressure center
A*1	4-position dual 3-port	N.C./N.C.
B*1		N.O./N.O.
C*1		N.C./N.O.

*1 Only the rubber seal type is available for the 4-position dual 3-port valve.

❸ Seal type

0	Rubber seal
1	Metal seal

❹ Pilot type

Nil	Internal pilot
R	External pilot

❺ Back pressure check valve (Built-in valve type)

Nil	None
H	Built-in

* Only the rubber seal type is available. A manifold installed type is available if a back pressure check valve with a metal seal is required. Refer to page 212 for ordering examples. However, it is not recommended to use the built-in valve type and the manifold installed type at the same time because it will reduce the flow.
* The built-in valve type back pressure check valve is not available for the 3-position type or the SY7000.

❻ Pilot valve option

Nil	Standard (0.7 MPa)
B	Quick response type (0.7 MPa)
K*1	High pressure type (1.0 MPa)

*1 Only the metal seal type is available for the high pressure type.

❼ Coil type

Nil	Standard
T	With power saving circuit (Continuous duty type)

* Be sure to select the power saving circuit type if the valve is to be continuously energized for long periods of time.
* Be careful of the energizing time when the power saving circuit is selected. Refer to page 292 for details.

❽ Rated voltage

5	24 VDC
6	12 VDC

* The applicable rated voltage varies depending on the manifold wiring type.

❾ Light/surge voltage suppressor and common specification

Symbol	With light	Surge voltage suppressor	Common specification
Nil	—	—	Non-polar
R	—	●	
U	●		
S	—		Positive common
Z	●		
NS	—		Negative common
NZ	●		

* For the non-polar type, be careful of surge voltage intrusion. Refer to page 293 for details. (Excludes when an SI unit manifold is used)
* Only "Z" and "NZ" are available with a power saving circuit.
* Select "R," "U," "S," or "Z" for the valve when the SI unit output polarity is positive common. Select "R," "U," "NS," or "NZ" for the valve when the SI unit output polarity is negative common.

❿ Manual override

Nil: Non-locking push type

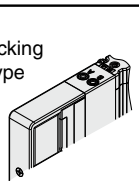

D: Push-turn locking slotted type

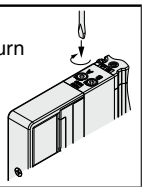

E: Push-turn locking lever type

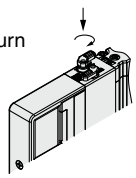

F: Slide locking type

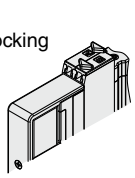

⓫ A, B port size

One-touch fitting (Metric)

Symbol	A, B port	SY5000	SY7000
C6	ø6	●	●

⓬ Type of mounting screw

Nil	Round head combination screw
B	Hexagon socket head cap screw
K	Round head combination screw (Drop prevention type)
H	Hexagon socket head cap screw (Drop prevention type)

* For "K" and "H," the valve body cover has a drop prevention construction to stop the mounting screws from falling out when the valve is removed for maintenance, etc.
* **When ordering a valve individually, the base gasket is not included.**
  Since the base gasket is attached to the manifold, please order the base gasket separately if it is needed for maintenance. Refer to page 198 for base gasket and mounting screw part numbers
* "B" and "H" cannot be selected for the individual SUP/EXH spacer assembly or interface regulator.

⓭ Pressure sensor

Symbol	Included quantity
P1	1 pc.
P2	2 pcs.

* The top-ported type valve and the C6 (ø6) One-touch fitting are used.
* The PSE540-R06 pressure sensor is included in the product package.
* When "P1" is selected, one plug (KQ2P-06) is included in the product package.

How to Order Manifold Assembly

Example (SS5Y5-10F1-□)

SS5Y5-10F1-05D-C8
…1 set (Type 10 5-station manifold base part no.)
***SY5130-5U1-C6-P1**
…2 sets (2-position single part no.)
***SY5130-5U1-C6-P2**
…1 set (2-position double part no.)
***SY5230-5U1-C6-P2**
…1 set (2-position double part no.)
***SY5330-5U1-C6-P2**
…1 set (3-position closed center part no.)
→ The asterisk denotes the symbol for the assembly. Prefix it to the part numbers of the valve, etc.

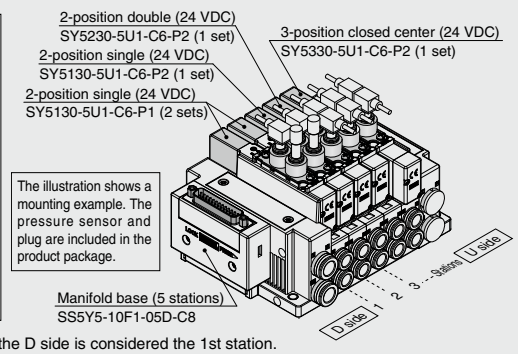

· For the valve arrangement, the valve closest to the D side is considered the 1st station.
· Under the manifold part number, state the valves to be mounted in order starting with the 1st station as shown in the figure above. If the arrangement becomes too complicated, specify the details on a manifold specification sheet.

Pressure Sensor Specifications

Model		PSE540
Rated pressure range		0 to 1 MPa*1
Power supply voltage		12 to 24 VDC ±10%, Ripple (p-p) 10% or less (with reverse connection protection)
Current consumption		15 mA or less
Output specifications		Analog output 1 to 5 V (within rated pressure range), 0.6 to 1 V (within extension analog output range), Output impedance: Approx. 1 kΩ
Linearity		±0.7% F.S. or less
Environment	**Enclosure***2	IP40
Temperature characteristics		±2% F.S. (25°C reference)
Sensor cable		Oilproof heavy-duty vinyl cable (ellipse), 3 cores, 2.7 x 3.2, 3 m, Conductor area: 0.15 mm², Insulator O.D.: 0.9 mm

*1 Set the pressure within the operating pressure range of the valve.
*2 Please note that even if the manifold is IP67, the product will remain IP40.

Dimensions

SY5000-P2

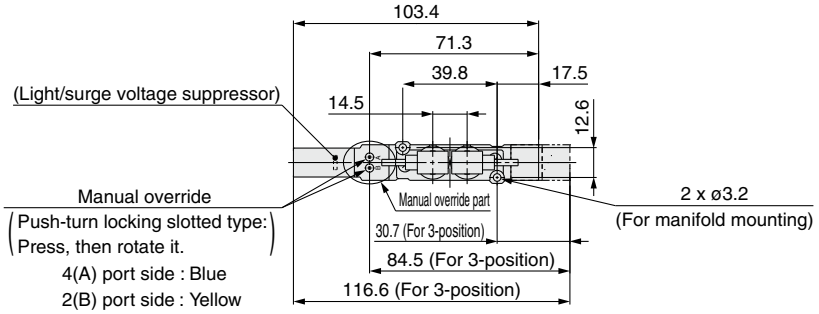

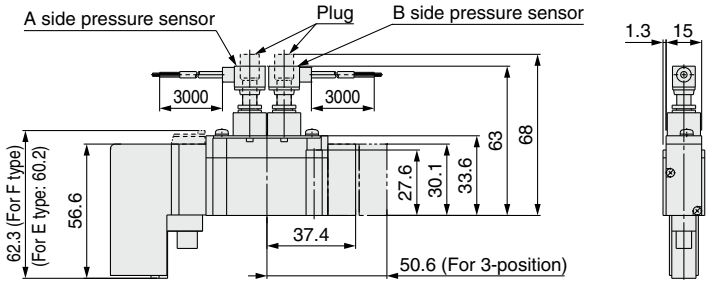

SY7000-P2

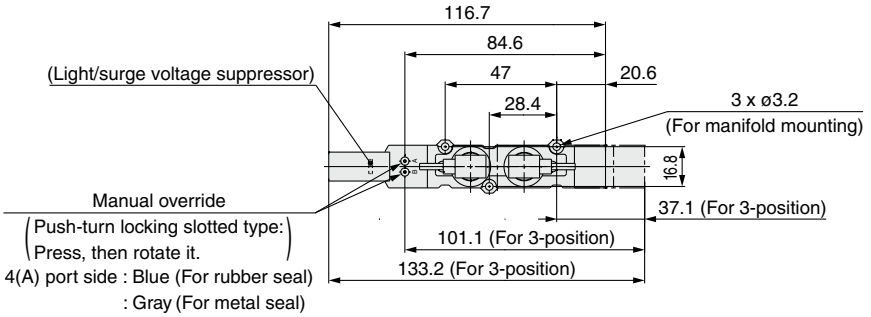

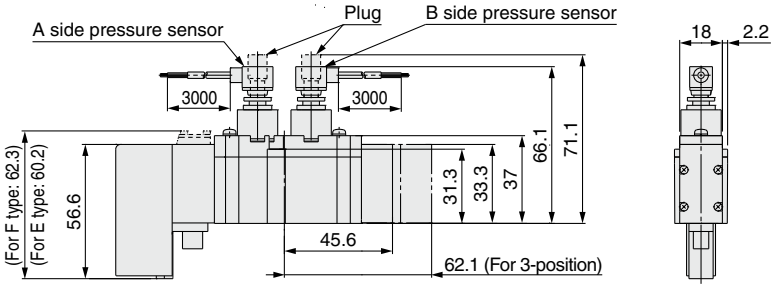

SY3000/5000/7000 Series
Made to Order

Please contact SMC for detailed dimensions, specifications, and lead times.

Made to Order

1 Main Valve Fluororubber Specification

Symbol **-X90**

Fluororubber is used for rubber parts of the main valve to allow use in applications such as the following.

· When using a lubricant other than the recommended turbine oil, and there is a possibility of malfunction due to swelling of the spool valve seals.

Applicable valves series **SY3□$^{0}_{3}$0, SY5□$^{0}_{3}$0, SY7□$^{0}_{3}$0** (Only rubber seal type)

SY$^{3}_{5}_{7}$□$^{0}_{3}$0□□□□−□□□1−□□−□−X90

● **Entry is the same as standard products.**
Specifications and performance are the same as standard products.

2 With Safety Slide Locking Manual Override

Symbol **-X13**

A safety lock is added to the slide locking manual override.
(Refer to page 4.)

SY$^{3}_{5}_{7}$□00 31□□□□−□□G1−□−X13

● **Entry is the same as standard products.**
Specifications and performance are the same as standard products.

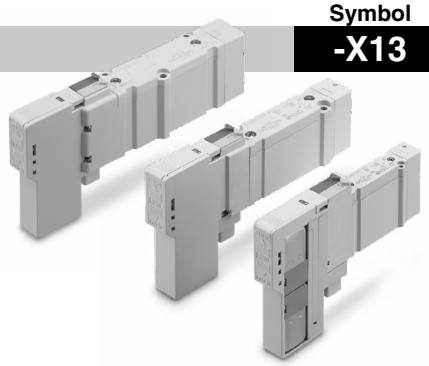

3 2-Position Single Solenoid Valve with Built-in Return Spring (Only rubber seal type)

Symbol **-X350**

A 2-position single solenoid valve with a spring built into the main valve
The main valve returns to origin (the OFF position) via the spring when it is not pressurized.

SY$^{3}_{5}_{7}$1$^{0}_{3}$0□□□□−□□1−□□−□−X350

Rubber seal type

● **Entry is the same as standard products.**
Specifications and performance are the same as standard products.

Internal pilot type

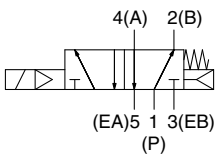

External pilot type

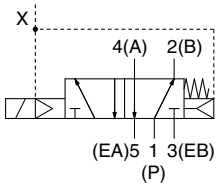

∗ For the external pilot type, exhaust the external pilot (X) port and the main pressure simultaneously.
If the main pressure cannot be exhausted due to the system specifications, please contact SMC separately.

∗ The manual option is only applicable to the non-locking push type.

Plug-in Connector Connecting Base

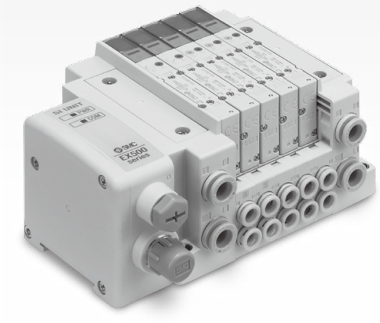

Side ported

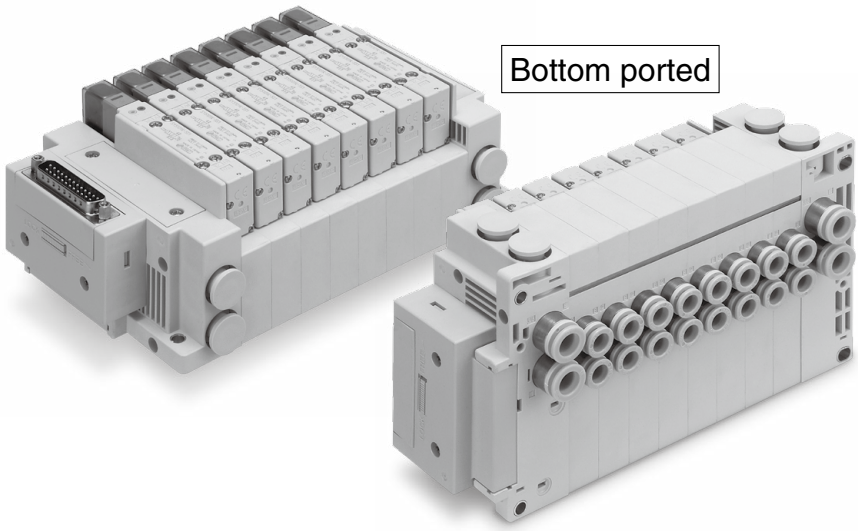

Bottom ported

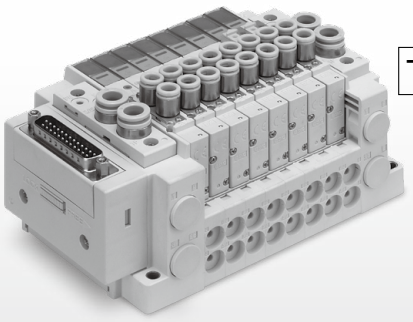

Top ported

Plug-in Connector Connecting Base



Manifold Specifications

Model			D-sub connector		Flat ribbon cable			Terminal block box (Spring type)	Terminal block box	Lead wire	Circular connector	Serial wiring				
			F type	FW type	P type	PG type	PH type	TC type	T type	L type	M type	S6□ type (EX600)	SA□ type (EX245)	SA2 type (EX500) S4□ type (EX126)	SA3 type (EX500) S□ type (EX250) (EX260)	S3□ type (EX120) S8□ type (EX180)
Manifold type			Plug-in connector connecting base													
SUP/EXH port type			Common SUP/EXH (Common for 3/5 port)													
Valve stations			2 to 24 stations			2 to 18 stations	2 to 8 stations	2 to 24 stations	2 to 20 stations	2 to 24 stations				2 to 16 stations	2 to 24 stations	2 to 16 stations (EX120) 2 to 24 stations (EX180)
Applicable connector			D-sub connector Conforming to MIL-C-24308 JIS-X-5101 (Refer to page 55.)	Dedicated connector (Refer to page 55.)	Flat ribbon cable connector with strain relief Conforming to MIL-C-83503 (Refer to page 57.) Socket: 26 pins MIL type	Socket: 20 pins MIL type	Socket: 10 pins MIL type	—								
Internal wiring			Positive common, Negative common										Negative common	Positive common, Negative common		
Port size	**1(P), 3/5(E) port**	**SY3000**	ø8 One-touch fitting ø5/16" One-touch fitting													
		SY5000	ø10 One-touch fitting ø3/8" One-touch fitting													
		SY7000	ø12 One-touch fitting ø1/2" One-touch fitting													
	4(A), 2(B) port	**SY3000**	ø2 One-touch fitting, ø3.2 One-touch fitting, ø4 One-touch fitting, ø6 One-touch fitting ø1/8" One-touch fitting, ø5/32" One-touch fitting, ø1/4" One-touch fitting													
		SY5000	ø4 One-touch fitting, ø6 One-touch fitting, ø8 One-touch fitting ø5/32" One-touch fitting, ø1/4" One-touch fitting, ø5/16" One-touch fitting													
		SY7000	ø6 One-touch fitting, ø8 One-touch fitting, ø10 One-touch fitting, ø12 One-touch fitting ø1/4" One-touch fitting, ø5/16" One-touch fitting, ø3/8" One-touch fitting													
Enclosure (Based on IEC60529)			IP40	IP67*1	IP40			IP67*1				IP67*1 (I/O Unit: partially IP40)	IP65	IP67*1 (EX500 GW Unit, Input Unit: IP65)	IP67*1 (EX260 D-sub communication connector: IP40) (EX500 GW Unit: IP65)	IP20

*1 In the case of a metal seal, there are restrictions in the operating environment. Refer to the “Specific Product Precautions” on page 290.

Manifold Flow Rate Characteristics*1/Manifold Weight

Valve Seal Type: Rubber Seal
Side Ported (Type 10)

Manifold model	Valve model	Port size		Flow rate characteristics				Weight: W [g]*2 (n: stations)
		1, 3/5 (P, E)	4, 2 (A, B)	1 → 4/2 (P → A/B)		4/2 → 3/5 (A/B → E)		
				C [dm³/(s·bar)]	b	C [dm³/(s·bar)]	b	
SS5Y3	SY3100 SY3200	C8	C6	1.4	0.30	1.6	0.19	28.9 n + 293
	SY3300			1.3	0.28	1.2	0.40	
	SY3400			1.2	0.27	1.6	0.29	
	SY3500			1.4	0.31	1.1	0.36	
	SY3A00			1.3	0.26	1.5	0.27	
	SY3B00			1.3	0.26	1.5	0.27	
	SY3C00			1.3	0.26	1.5	0.27	
SS5Y5	SY5100 SY5200	C10	C8	3.3	0.30	3.6	0.17	74.7 n + 398
	SY5300			3.1	0.32	2.9	0.31	
	SY5400			3.1	0.32	3.7	0.23	
	SY5500			3.4	0.32	2.9	0.31	
	SY5A00			2.9	0.32	3.2	0.25	
	SY5B00			2.8	0.31	2.9	0.26	
	SY5C00			2.9	0.32	3.1	0.25	
SS5Y7	SY7100 SY7200	C12	C12	6.2	0.23	5.9	0.20	106.6 n + 496
	SY7300			4.8	0.25	4.4	0.36	
	SY7400			4.8	0.25	6.6	0.27	
	SY7500			7.1	0.25	4.4	0.36	
	SY7A00			5.4	0.25	5.1	0.29	
	SY7B00			5.4	0.24	5.1	0.31	
	SY7C00			5.4	0.25	5.1	0.29	

Valve Seal Type: Rubber Seal
Bottom Ported (Type 11)

Manifold model	Valve model	Port size		Flow rate characteristics				Weight: W[g]*2 (n: stations)
		1, 3/5 (P, E)	4, 2 (A, B)	1 → 4/2 (P → A/B)		4/2 → 3/5 (A/B → E)		
				C [dm³/(s·bar)]	b	C [dm³/(s·bar)]	b	
SS5Y5	SY5100 SY5200	C10	C8	3.3	0.29	4.2	0.26	76.8 n + 445
SS5Y7	SY7100 SY7200	C12	C12	6.2	0.25	6.6	0.21	117.9 n + 532

Valve Seal Type: Rubber Seal
Top Ported (Type 12)

Manifold model	Valve model	Port size		Flow rate characteristics				Weight: W [g]*2 (n: stations)
		1, 3/5 (P, E)	4, 2 (A, B)	1 → 4/2 (P → A/B)		4/2 → 3/5 (A/B → E)		
				C [dm³/(s·bar)]	b	C [dm³/(s·bar)]	b	
SS5Y3	SY3130 SY3230	C8	C6	1.2	0.29	1.3	0.19	25.1 n + 314
SS5Y5	SY5130 SY5230	C10	C8	2.8	0.27	3.8	0.23	66.3 n + 417
SS5Y7	SY7130 SY7230	C12	C12	5.6	0.31	5.7	0.24	84.1 n + 519

*1 The value is for manifold base with 5 stations and individually operated 2-position type.
*2 Weight: W is the value of the internal pilot, and D-sub connector manifold with One-touch fitting straight piping type.
To obtain the weight with valves attached, add the valve weights given on page 17 for the appropriate number of stations.

* Calculation of effective area S and sonic conductance C: S = 5.0 x C

Manifold Flow Rate Characteristics*1/Manifold Weight

Valve Seal Type: Metal Seal
Side Ported (Type 10)

Manifold model	Valve model	Port size		Flow rate characteristics				Weight: W [g]*2 (n: stations)
		1, 3/5 (P, E)	4, 2 (A, B)	1 → 4/2 (P → A/B)		4/2 → 3/5 (A/B → E)		
				C [dm³/(s·bar)]	b	C [dm³/(s·bar)]	b	
SS5Y3	SY3101 SY3201	C8	C6	1.2	0.19	1.3	0.18	28.9 n + 293
	SY3301			0.8	0.19	0.8	0.35	
	SY3401			0.8	0.19	1.1	0.26	
	SY3501			0.9	0.21	0.7	0.32	
SS5Y5	SY5101 SY5201	C10	C8	2.7	0.24	3.1	0.17	74.7 n + 398
	SY5301			2.3	0.21	2.0	0.24	
	SY5401			2.3	0.21	2.7	0.18	
	SY5501			2.5	0.21	2.0	0.24	
SS5Y7	SY7101 SY7201	C12	C12	4.4	0.14	4.4	0.17	106.6 n + 496
	SY7301			3.4	0.12	3.3	0.24	
	SY7401			3.4	0.12	4.9	0.18	
	SY7501			5.0	0.12	3.3	0.24	

Valve Seal Type: Metal Seal
Bottom Ported (Type 11)

Manifold model	Valve model	Port size		Flow rate characteristics				Weight: W [g]*2 (n: stations)
		1, 3/5 (P, E)	4, 2 (A, B)	1 → 4/2 (P → A/B)		4/2 → 3/5 (A/B → E)		
				C [dm³/(s·bar)]	b	C [dm³/(s·bar)]	b	
SS5Y5	SY5101 SY5201	C10	C8	2.8	0.25	3.5	0.15	76.8 n + 445
SS5Y7	SY7101 SY7201	C12	C12	4.6	0.16	4.7	0.18	117.9 n + 532

Valve Seal Type: Metal Seal
Top Ported (Type 12)

Manifold model	Valve model	Port size		Flow rate characteristics				Weight: W [g]*2 (n: stations)
		1, 3/5 (P, E)	4, 2 (A, B)	1 → 4/2 (P1 → A/B)		4/21 → 3/5 (A/B1 → E)		
				C [dm³/(s·bar)]	b	C [dm³/(s·bar)]	b	
SS5Y3	SY3131 SY3231	C8	C6	1.2	0.16	1.3	0.18	25.1 n + 314
SS5Y5	SY5131 SY5231	C10	C8	2.6	0.18	3.0	0.16	66.3 n + 417
SS5Y7	SY7131 SY7231	C12	C12	3.9	0.21	4.1	0.14	84.1 n + 519

*1 The value is for manifold base with 5 stations and individually operated 2-position type.
*2 Weight: W is the value of the internal pilot, and D-sub connector manifold with One-touch fitting straight piping type.
To obtain the weight with valves attached, add the valve weights given on page 17 for the appropriate number of stations.

* Calculation of effective area S and sonic conductance C: S = 5.0 x C

Connector Wiring Layout

For both serial and parallel wiring, additional valves are sequentially assigned pins on the connector.
This makes it completely unnecessary to disassemble the connector unit.

■ Single solenoid valve is installed to all double wiring. (in the case of all double wiring) (Manifold specification sheet is not necessary.)

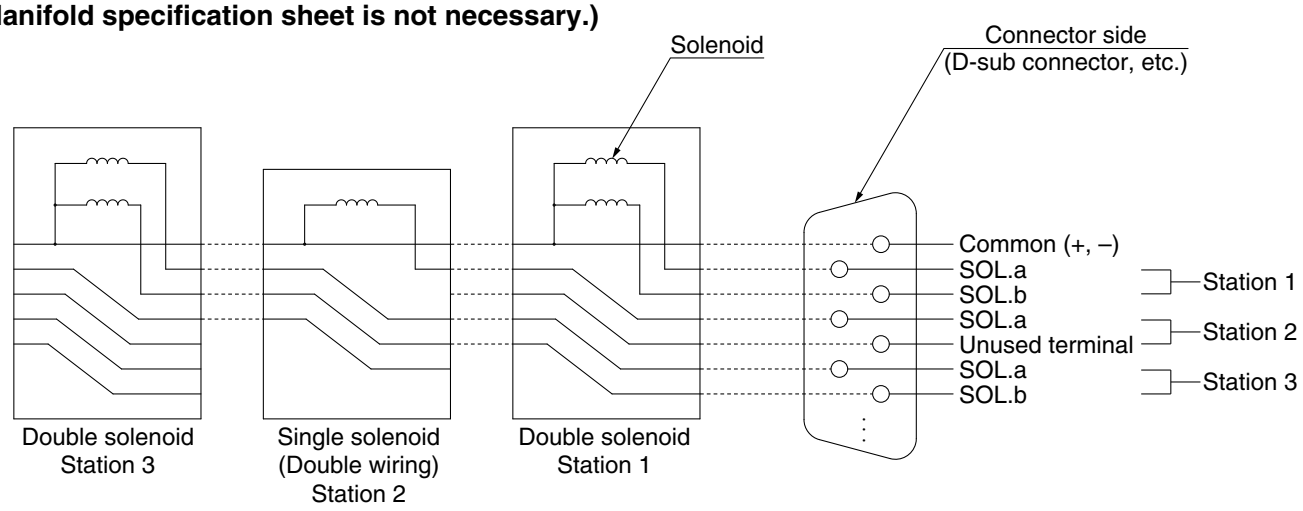

■ Single/double wiring are mixed. (Manifold specification sheet is necessary.)

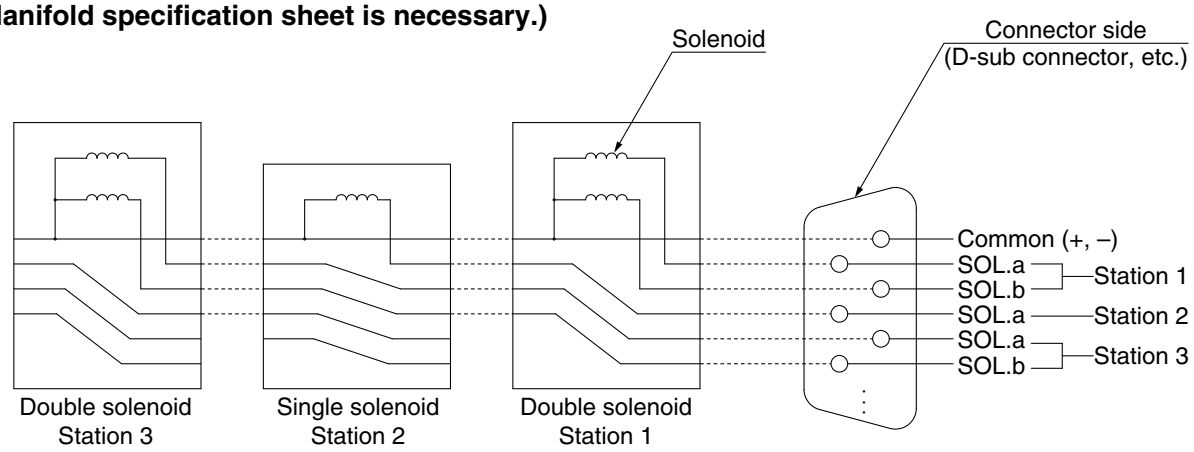

∗ These diagrams are for the purpose of explanation, and differ from the connector wiring used for testing.

Type 10
Side Ported

Type 11
Bottom Ported

Plug-in Connector Connecting Base

D-sub Connector | Flat Ribbon Cable

SY3000/5000/7000 Series

How to Order Manifolds

Refer to pages 160 (SY5000) and 161 (SY7000) for the dimensions of Type 11/Bottom-ported type.

SS5Y **3** – **10** **F** **1** – **05** **U** □ – **C6** □

❶ ❷ ❸ ❹ ❺ ❻ ❼ ❽ ❾

❶ Series

3	SY3000
5	SY5000
7	SY7000

❷ Type

10	Side ported
11	Bottom ported*1

*1 The SY5000 manifold base is used for the bottom-ported SY3000. When ordering, refer to the "Plug-in Mixed Mounting Type Manifold" (from page 165).

❸ Connector type

F: D-sub connector <IP40> (25 pins)

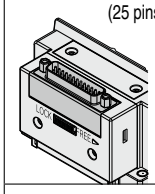

FW: D-sub connector <IP67> (25 pins)

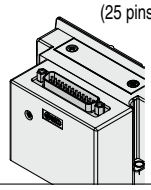

P: Flat ribbon cable (26 pins)

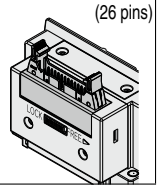

PG: Flat ribbon cable (20 pins)

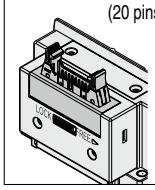

PH: Flat ribbon cable (10 pins)

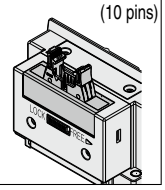

❹ Connector entry direction

1: Upward	**2**: Lateral
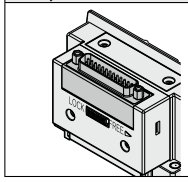	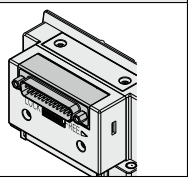

* The connector entry direction for connector type "FW" D-sub connector <IP67> cannot be rotated. If it is necessary to change, order the connector block assembly (page 183) separately.

❺ Valve stations

F/FW: D-sub connector (25 pins)

Symbol	Stations	Note
02	2 stations	Double wiring*1
⋮	⋮	
12	12 stations	
02	2 stations	Specified layout*2 (Up to 24 solenoids available)
⋮	⋮	
24	24 stations	

P: Flat ribbon cable (26 pins)

Symbol	Stations	Note
02	2 stations	Double wiring*1
⋮	⋮	
12	12 stations	
02	2 stations	Specified layout*2 (Up to 24 solenoids available)
⋮	⋮	
24	24 stations	

PG: Flat ribbon cable (20 pins)

Symbol	Stations	Note
02	2 stations	Double wiring*1
⋮	⋮	
09	9 stations	
02	2 stations	Specified layout*2 (Up to 18 solenoids available)
⋮	⋮	
18	18 stations	

PH: Flat ribbon cable (10 pins)

Symbol	Stations	Note
02	2 stations	Double wiring*1
⋮	⋮	
04	4 stations	
02	2 stations	Specified layout*2 (Up to 8 solenoids available)
⋮	⋮	
08	8 stations	

*1 Double wiring: 2-position single, double, 3-position, and 4-position valves can be used on all manifold stations. Use of a 2-position single solenoid will result in an unused control signal. If this is not desired, order with a specified layout.

*2 Specified layout: Indicate the wiring specifications on the manifold specification sheet. (Note that 2-position double, 3-position, and 4-position valves cannot be used where single wiring has been specified.)

* This also includes the number of the blanking plate assembly.

How to Order Manifold Assembly

Example (SS5Y3-10F1-□)

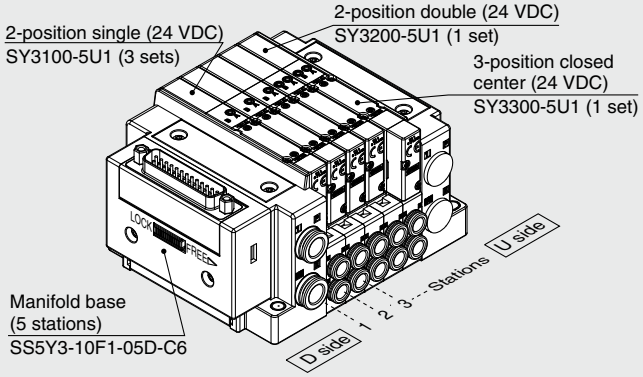

SS5Y3-10F1-05D-C6 ··· 1 set (Type 10 5-station manifold base part no.)
***SY3100-5U1 ····· 3 sets (2-position single part no.)**
***SY3200-5U1 ····· 1 set (2-position double part no.)**
***SY3300-5U1 ····· 1 set (3-position closed center part no.)**
→ **The asterisk denotes the symbol for the assembly. Prefix it to the part numbers of the valve, etc.**

- For the valve arrangement, the valve closest to the D side is considered the 1st station.
- Under the manifold part number, state the valves to be mounted in order starting with the 1st station as shown in the figure above. If the arrangement becomes too complicated, specify the details on a manifold specification sheet.

* When mixing top-ported configurations, select from those listed on page 54. In such cases, use caution as there is also output on the A and B ports on the base side. Specify on the manifold specification sheet if plugs are required for the A and B ports on the base side.

❻ P, E port entry

U	U side (2 to 10 stations)
D	D side (2 to 10 stations)
B	Both sides (2 to 24 stations)

❼ SUP/EXH block assembly

Nil	Internal pilot
S	Internal pilot, Built-in silencer
R	External pilot

∗ 3/5(E) port is plugged for the built-in silencer type.

❾ Mounting and Option

Symbol	Mounting	Option	
		Name plate	Station number
Nil	Direct mounting	—	—
AA		●	●
BA		●	—
D□	DIN rail mounting	—	—
A□		●	●
B□		●	—

DIN Rail Option

Nil	Direct mounting	
0	Without DIN rail (with bracket)	
3	For 3 stations	Specify a longer rail than the total length of specified stations.
⋮	⋮	
24	For 24 stations	

∗ Enter the number of stations inside □ when it is larger than the number of valve stations. (Refer to "DIN Rail Option" above.)
∗ Only direct mounting is available for the type 11 bottom-ported type.
∗ Refer to page 295 for the fixation of DIN rail mounting type manifold.

❽ A, B port size (Metric/One-touch fitting)

Symbol	A, B port		Type 10/Side ported			Type 11/Bottom ported	
			SY3000	SY5000	SY7000	SY5000	SY7000
C2	Straight	ø2	●	—	—	—	—
C3		ø3.2	●	—	—	—	—
C4		ø4	●	●	—	●	—
C6		ø6	●	●	●	●	●
C8		ø8	—	●	●	●	●
C10		ø10	—	—	●	—	●
C12		ø12	—	—	●	—	●
CM∗1		Straight port, mixed sizes	●	●	●	●	●
L4	Elbow∗2 Upward	ø4	●	●	—	—	—
L6		ø6	●	●	●	—	—
L8		ø8	—	●	●	—	—
L10		ø10	—	—	●	—	—
L12		ø12	—	—	●	—	—
B4	Elbow∗2 Downward	ø4	●	●	—	—	—
B6		ø6	●	●	●	—	—
B8		ø8	—	●	●	—	—
B10		ø10	—	—	●	—	—
B12		ø12	—	—	●	—	—
LM∗1		Elbow port, mixed sizes (Including upward and downward piping)	●	●	●	—	—
P, E port size (One-touch fittings)			ø8	ø10	ø12	ø10	ø12

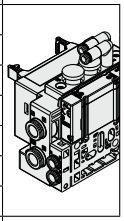
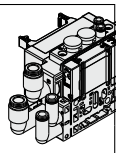
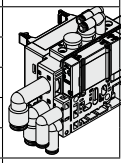

A, B port size (Inch/One-touch fitting)

Symbol	A, B port		Type 10/Side ported			Type 11/Bottom ported	
			SY3000	SY5000	SY7000	SY5000	SY7000
N1	Straight	ø1/8"	●	—	—	—	—
N3		ø5/32"	●	●	—	●	—
N7		ø1/4"	●	●	●	●	●
N9		ø5/16"	—	●	●	●	●
N11		ø3/8"	—	—	●	—	●
CM∗1		Straight port, mixed sizes	●	●	●	●	●
LN3	Elbow∗2 Upward	ø5/32"	●	—	—	—	—
LN7		ø1/4"	●	●	—	—	—
LN9		ø5/16"	—	●	—	—	—
LN11		ø3/8"	—	—	●	—	—
BN3	Elbow∗2 Downward	ø5/32"	●	—	—	—	—
BN7		ø1/4"	●	●	—	—	—
BN9		ø5/16"	—	●	—	—	—
BN11		ø3/8"	—	—	●	—	—
LM∗1		Elbow port, mixed sizes (Including upward and downward piping)	●	●	●	—	—
P, E port size (One-touch fittings)			ø5/16"	ø3/8"	ø1/2"	ø3/8"	ø1/2"

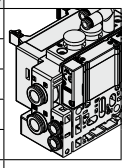
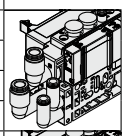
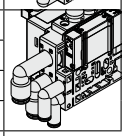

∗1 Indicate the sizes on the manifold specification sheet in the case of "CM" or "LM."
The direction of P, E port fittings is the same as for the A, B port. If selecting "LM," indicate it on the manifold specification sheet for the P, E port fitting direction.
∗2 To avoid interference with the body or piping, select a downward elbow port when mounting the optional spacer assembly (pages 204 to 206).

⚠ Protective class class Ⅲ (Mark: ⧫)

How to Order Valves (With mounting screw)

Refer to page 15 for valve specifications.

SY 3 1 0 0 ❶ ❷ ❸ ❹ ❺ ❻ ❼ – 5 ❽ ❾ ❿ 1 – ⓫

Base mounted

❶ Series

3	SY3000
5	SY5000
7	SY7000

❷ Type of actuation

1	2-position	Single
2		Double
3	3-position	Closed center
4		Exhaust center
5		Pressure center
A*1	4-position dual 3-port	N.C./N.C.
B*1		N.O./N.O.
C*1		N.C./N.O.

*1 Only the rubber seal type is available for the 4-position dual 3-port valve.

❸ Seal type

0	Rubber seal
1	Metal seal

❹ Pilot type

Nil	Internal pilot
R	External pilot

❺ Back pressure check valve (Built-in valve type)

Nil	None
H	Built-in

* Only the rubber seal type is available. A manifold installed type is available if a back pressure check valve with a metal seal is required. Refer to page 212 for ordering examples. However, it is not recommended to use the built-in valve type and the manifold installed type at the same time because it will reduce the flow.
* The built-in valve type back pressure check valve is not available for the 3-position type or the SY7000.

❻ Pilot valve option

Nil	Standard (0.7 MPa)
B	Quick response type (0.7 MPa)
K*1	High pressure type (1.0 MPa)

*1 Only the metal seal type is available for the high pressure type.

❼ Coil type

Nil	Standard
T	With power saving circuit (Continuous duty type)

* Be sure to select the power saving circuit type if the valve is to be continuously energized for long periods of time.
* Be careful of the energizing time when the power saving circuit is selected. Refer to page 292 for details.

❽ Rated voltage

5	24 VDC
6	12 VDC

❾ Light/surge voltage suppressor and common specification

Symbol	With light	Surge voltage suppressor	Common specification
Nil	—	—	Non-polar
R	—	●	
U	●		
S	—		Positive common
Z	●		
NS	—		Negative common
NZ	●		

* For the non-polar type, be careful of surge voltage intrusion. Refer to page 293 for details.
* Only "Z" and "NZ" types are available with a power saving circuit.

❿ Manual override

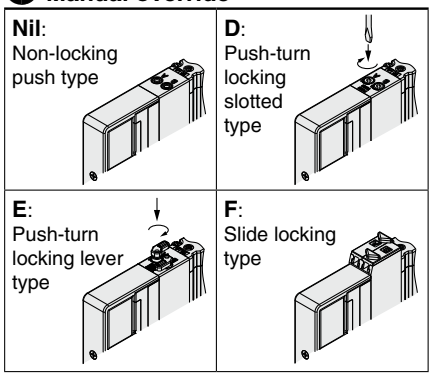

* Refer to page 34 for the safety slide locking manual override.

⓫ Type of mounting screw

Nil	Round head combination screw
B	Hexagon socket head cap screw
K	Round head combination screw (Drop prevention type)
H	Hexagon socket head cap screw (Drop prevention type)

* For "K" and "H," the valve body cover has a drop prevention construction to stop the mounting screws from falling out when the valve is removed for maintenance, etc.
* **When ordering a valve individually, the base gasket is not included.**
  Since the base gasket is attached to the manifold, please order the base gasket separately if it is needed for maintenance. Refer to page 198 for base gasket and mounting screw part numbers.
* "B" and "H" cannot be selected for the individual SUP/EXH spacer assembly, interface regulator, or double check spacer assembly with residual pressure release valve.

Protective class class Ⅲ (Mark: ⧫)

Plug-in Connector Connecting Base | Type 10/Side Ported | D-sub Connector (IP40)

Dimensions: SY3000 Series

SS5Y3-10F$^{1}_{2}$- Stations **U / D / B** - **C2 / C3, N1 / C4, N3 / C6, N7** **(D)**

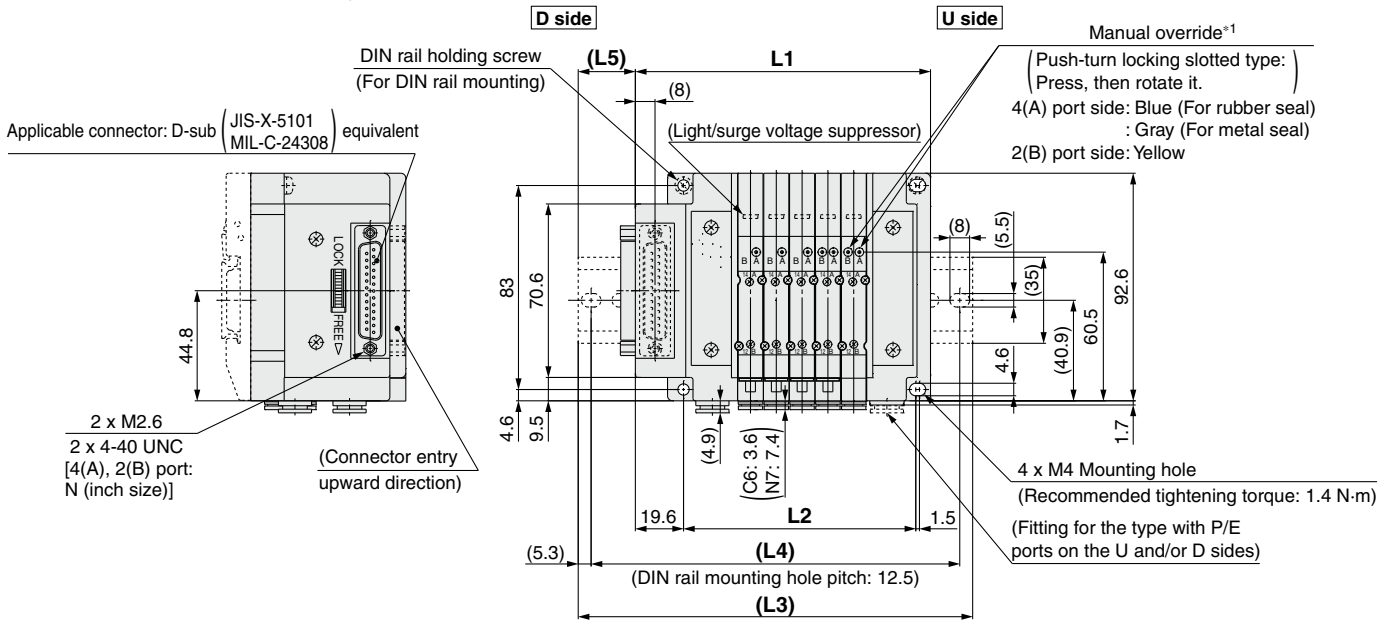

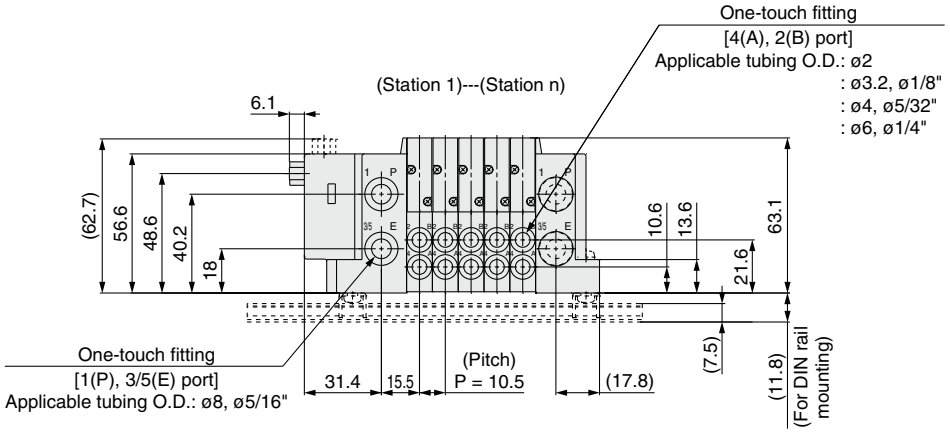

*1 Refer to page 157 for dimensions of the external pilot, silencer, elbow fittings, and slide locking manual override.
* These figures show the "SS5Y3-10F2-05D-C6."
* Refer to page 162 for dimensions of A or B port top-ported type.

n: Stations	2	3	4	5	6	7	8	9	10	11	12	13	14	15	16	17	18	19	20	21	22	23	24
L1	88.6	99.1	109.6	120.1	130.6	141.1	151.6	162.1	172.6	183.1	193.6	204.1	214.6	225.1	235.6	246.1	256.6	267.1	277.6	288.1	298.6	309.1	319.6
L2	63	73.5	84	94.5	105	115.5	126	136.5	147	157.5	168	178.5	189	199.5	210	220.5	231	241.5	252	262.5	273	283.5	294
L3	123	135.5	148	160.5	160.5	173	185.5	198	210.5	223	223	235.5	248	260.5	273	285.5	298	298	310.5	323	335.5	348	360.5
L4	112.5	125	137.5	150	150	162.5	175	187.5	200	212.5	212.5	225	237.5	250	262.5	275	287.5	287.5	300	312.5	325	337.5	350
L5	20.5	21.5	22.5	23.5	18	19	20	21	22	23	18	19	20	21	22	23	23.5	18.5	19.5	20.5	21.5	22.5	23.5

Plug-in Connector Connecting Base | Type 10/Side Ported | D-sub Connector (IP40)

Dimensions: SY5000 Series

SS5Y5-10F$^{1}_{2}$-Stations U C4, N3 / D C6, N7 / B C8, N9 (D)

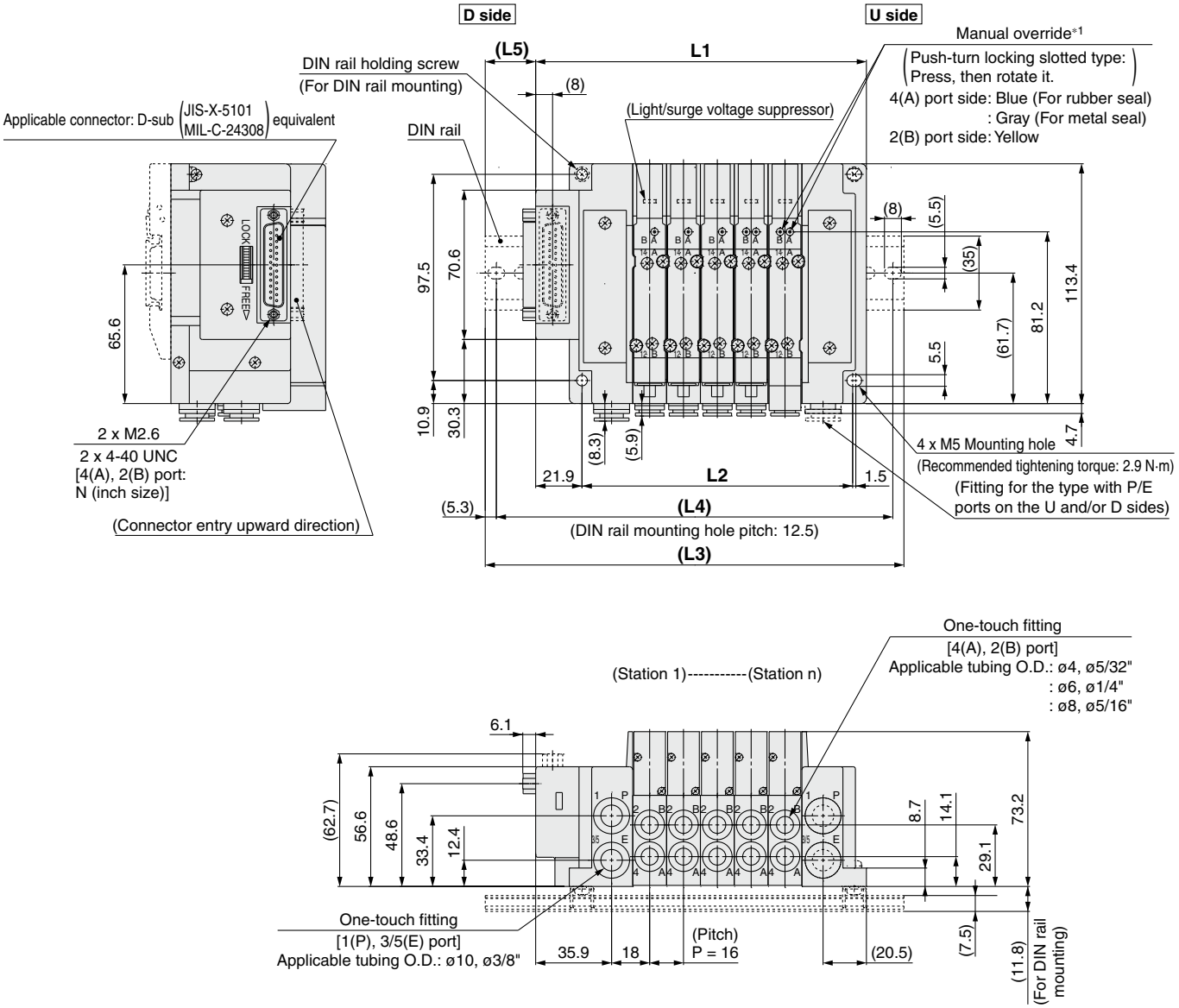

*1 Refer to page 158 for dimensions of the external pilot, silencer, elbow fittings, and slide locking manual override.
* These figures show the "SS5Y5-10F2-05D-C8."
* Refer to page 163 for dimensions of A or B port top-ported type.

n: Stations	2	3	4	5	6	7	8	9	10	11	12	13	14	15	16	17	18	19	20	21	22	23	24
L1	108.4	124.4	140.4	156.4	172.4	188.4	204.4	220.4	236.4	252.4	268.4	284.4	300.4	316.4	332.4	348.4	364.4	380.4	396.4	412.4	428.4	444.4	460.4
L2	80	96	112	128	144	160	176	192	208	224	240	256	272	288	304	320	336	352	368	384	400	416	432
L3	148	160.5	173	198	210.5	223	235.5	260.5	273	285.5	298	323	335.5	348	373	385.5	398	410.5	435.5	448	460.5	485.5	498
L4	137.5	150	162.5	187.5	200	212.5	225	250	262.5	275	287.5	312.5	325	337.5	362.5	375	387.5	400	425	437.5	450	475	487.5
L5	23	21	19.5	24	22	20.5	18.5	23	21.5	19.5	18	22.5	20.5	19	23.5	21.5	20	18	22.5	21	19	23.5	22

Plug-in Connector Connecting Base | Type 10/Side Ported | D-sub Connector (IP40)

Dimensions: SY7000 Series

SS5Y7-10F$^{1}_{2}$-Stations $^{U}_{D}$-$^{C6, N7}_{C8, N9}$ $^{C10, N11}_{C12}$(D)

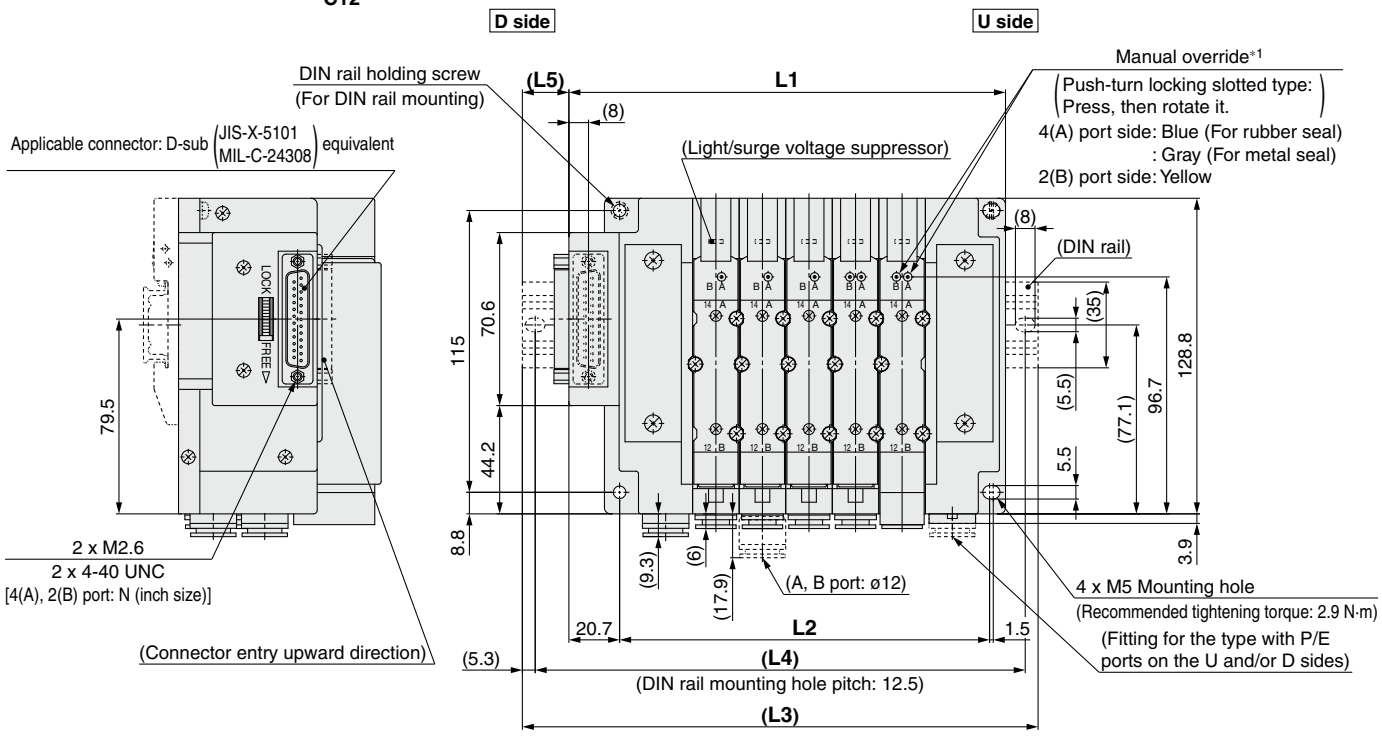

*1 Refer to page 159 for dimensions of the external pilot, silencer, elbow fittings, and slide locking manual override.
* These figures show the "SS5Y7-10F2-05D-C10."
* Refer to page 164 for dimensions of A or B port top-ported type.

n: Stations	2	3	4	5	6	7	8	9	10	11	12	13	14	15	16	17	18	19	20	21	22	23	24
L1	121.2	140.2	159.2	178.2	197.2	216.2	235.2	254.2	273.2	292.2	311.2	330.2	349.2	368.2	387.2	406.2	425.2	444.2	463.2	482.2	501.2	520.2	539.2
L2	94	113	132	151	170	189	208	227	246	265	284	303	322	341	360	379	398	417	436	455	474	493	512
L3	160.5	173	198	210.5	235.5	248	273	285.5	310.5	323	348	360.5	385.5	398	423	435.5	460.5	485.5	498	523	535.5	560.5	573
L4	150	162.5	187.5	200	225	237.5	262.5	275	300	312.5	337.5	350	375	387.5	412.5	425	450	475	487.5	512.5	525	550	562.5
L5	22.5	19.5	22.5	19	22	19	22	18.5	21.5	18.5	21.5	18	21	18	21	17.5	20.5	23.5	20.5	23.5	20	23	20

Plug-in
Connector Connecting Base

Type 10/Side Ported
D-sub Connector (IP67)

Dimensions: SY3000 Series

SS5Y3-10FW$^{1}_{2}$- Stations $^{U}_{D}$ $^{C2}_{C3, N1}$ $^{}_{C4, N3}$ $^{}_{C6, N7}$ (D)

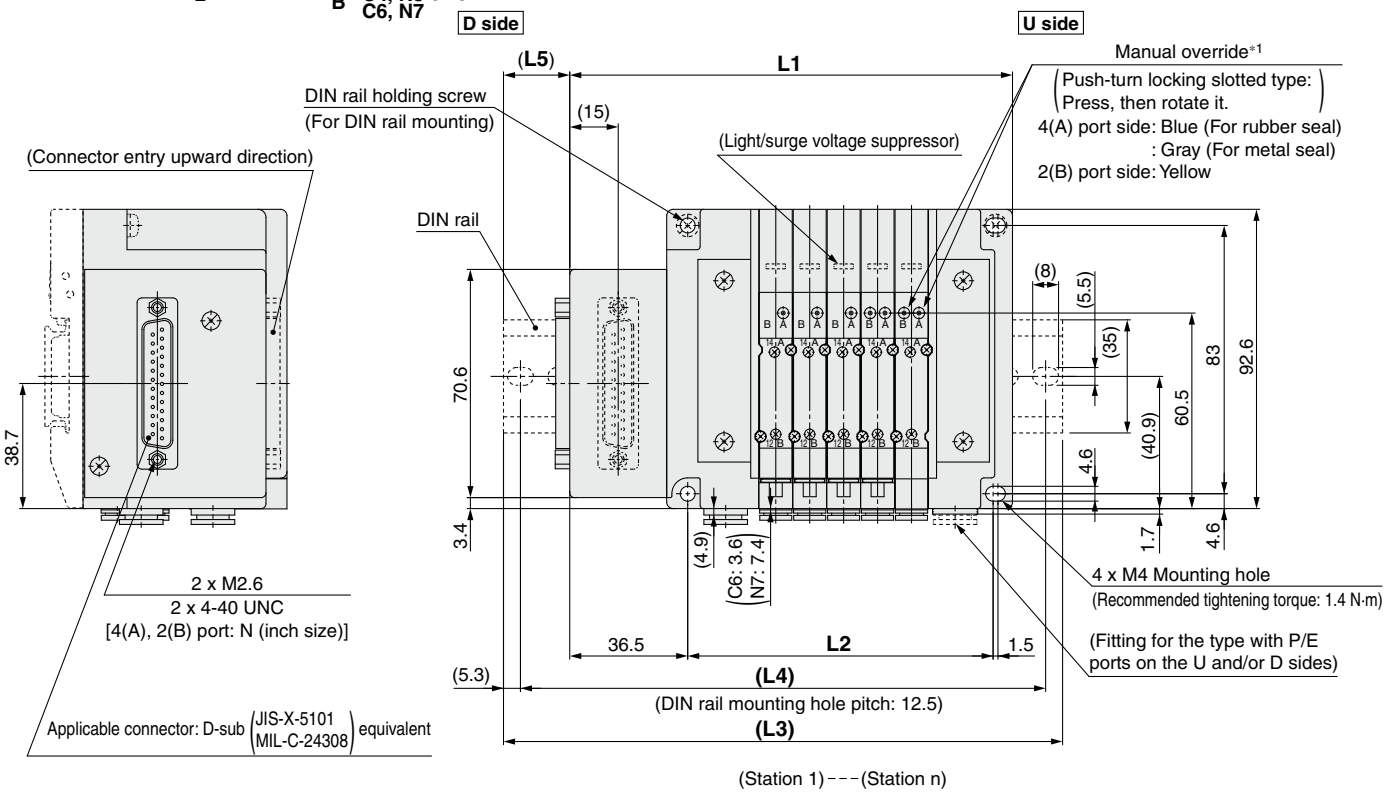

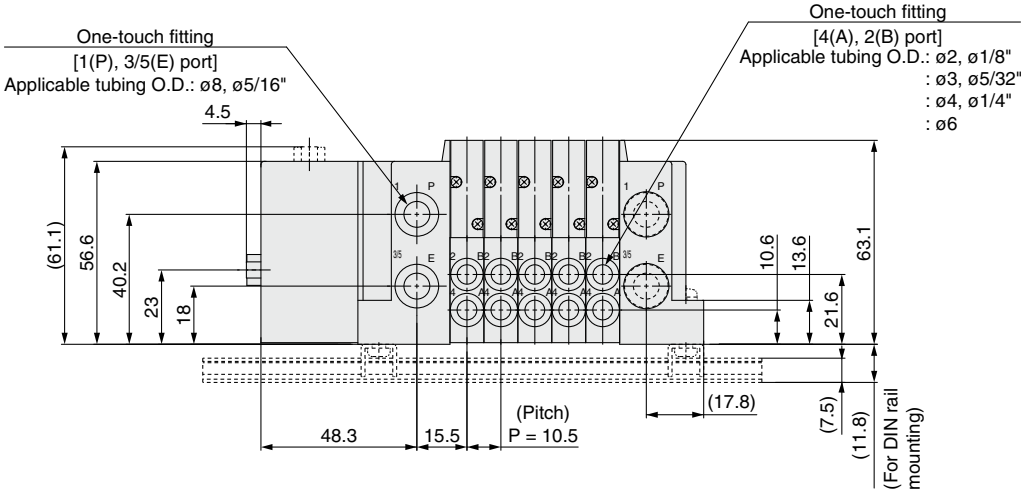

∗1 Refer to page 157 for dimensions of the external pilot, silencer, elbow fittings, and slide locking manual override.
∗ These figures show the "SS5Y3-10FW2-05D-C6."
∗ Refer to page 162 for dimensions of A or B port top-ported type.

n: Stations	2	3	4	5	6	7	8	9	10	11	12	13	14	15	16	17	18	19	20	21	22	23	24
L1	105.5	116	126.5	137	147.5	158	168.5	179	189.5	200	210.5	221	231.5	242	252.5	263	273.5	284	294.5	305	315.5	326	336.5
L2	63	73.5	84	94.5	105	115.5	126	136.5	147	157.5	168	178.5	189	199.5	210	220.5	231	241.5	252	262.5	273	283.5	294
L3	135.5	148	160.5	173	185.5	198	198	210.5	223	235.5	248	260.5	260.5	273	285.5	298	310.5	323	323	335.5	348	360.5	373
L4	125	137.5	150	162.5	175	187.5	187.5	200	212.5	225	237.5	250	250	262.5	275	287.5	300	312.5	312.5	325	337.5	350	362.5
L5	17.5	18.5	19.5	20.5	21.5	22.5	17	18	19	20	21	22	17	18	19	20	21	22	16.5	17.5	18.5	19.5	20.5

Plug-in Connector Connecting Base | Type 10/Side Ported | D-sub Connector (IP67)

Dimensions: SY5000 Series

SS5Y5-10FW$^{1}_{2}$- Stations $^{U\ C4, N3}_{D-\ C6, N7}$ $^{B\ C8, N9}$(D)

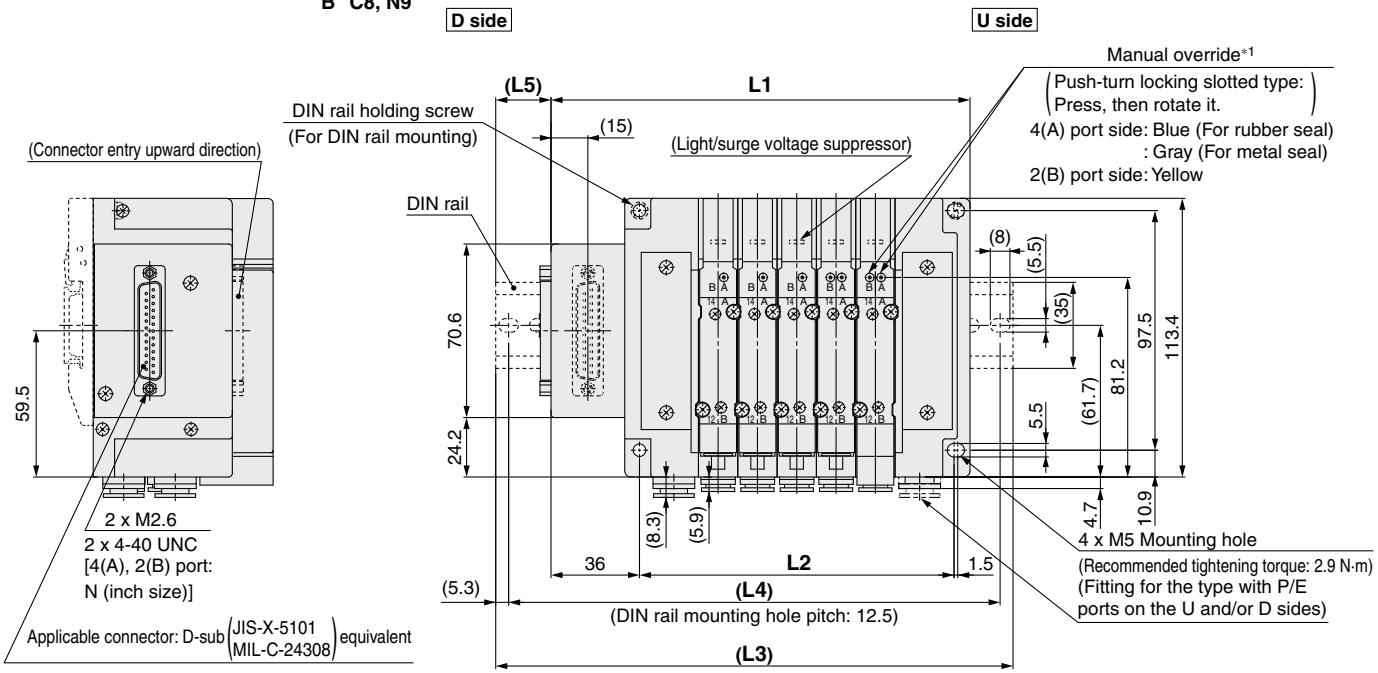

(Station 1)---(Station n)

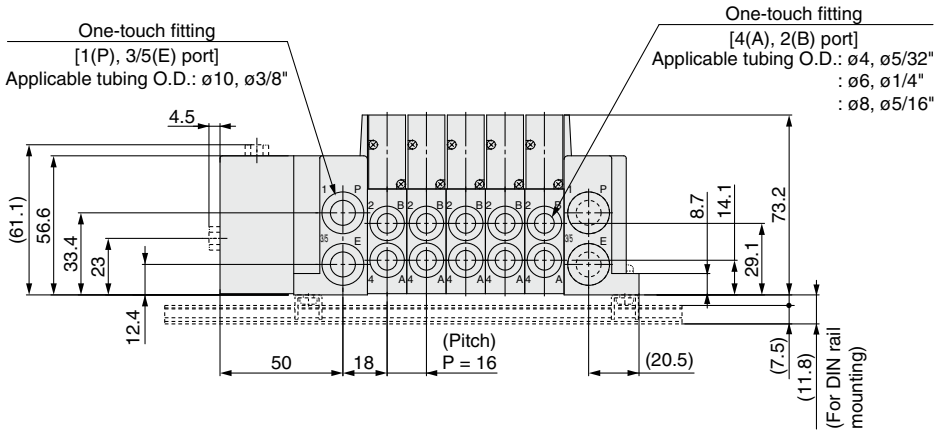

*1 Refer to page 158 for dimensions of the external pilot, silencer, elbow fittings, and slide locking manual override.
* These figures show the "SS5Y5-10FW2-05D-C8."
* Refer to page 163 for dimensions of A or B port top-ported type.

n: Stations	2	3	4	5	6	7	8	9	10	11	12	13	14	15	16	17	18	19	20	21	22	23	24
L1	122.5	138.5	154.5	170.5	186.5	202.5	218.5	234.5	250.5	266.5	282.5	298.5	314.5	330.5	346.5	362.5	378.5	394.5	410.5	426.5	442.5	458.5	474.5
L2	80	96	112	128	144	160	176	192	208	224	240	256	272	288	304	320	336	352	368	384	400	416	432
L3	160.5	173	185.5	210.5	223	235.5	248	273	285.5	298	310.5	335.5	348	360.5	385.5	398	410.5	423	448	460.5	473	498	510.5
L4	150	162.5	175	200	212.5	225	237.5	262.5	275	287.5	300	325	337.5	350	375	387.5	400	412.5	437.5	450	462.5	487.5	500
L5	21.5	19.5	18	22.5	20.5	19	17	21.5	20	18	16.5	21	19	17.5	22	20	18.5	16.5	21	19.5	17.5	22	20.5

Plug-in
Connector Connecting Base

Type 10/Side Ported
D-sub Connector (IP67)

Dimensions: SY7000 Series

SS5Y7-10FW$^{1}_{2}$- Stations **$^{U}_{D}$-$^{C6, N7}_{C8, N9}$ $^{C10, N11}_{C12}$(D)**

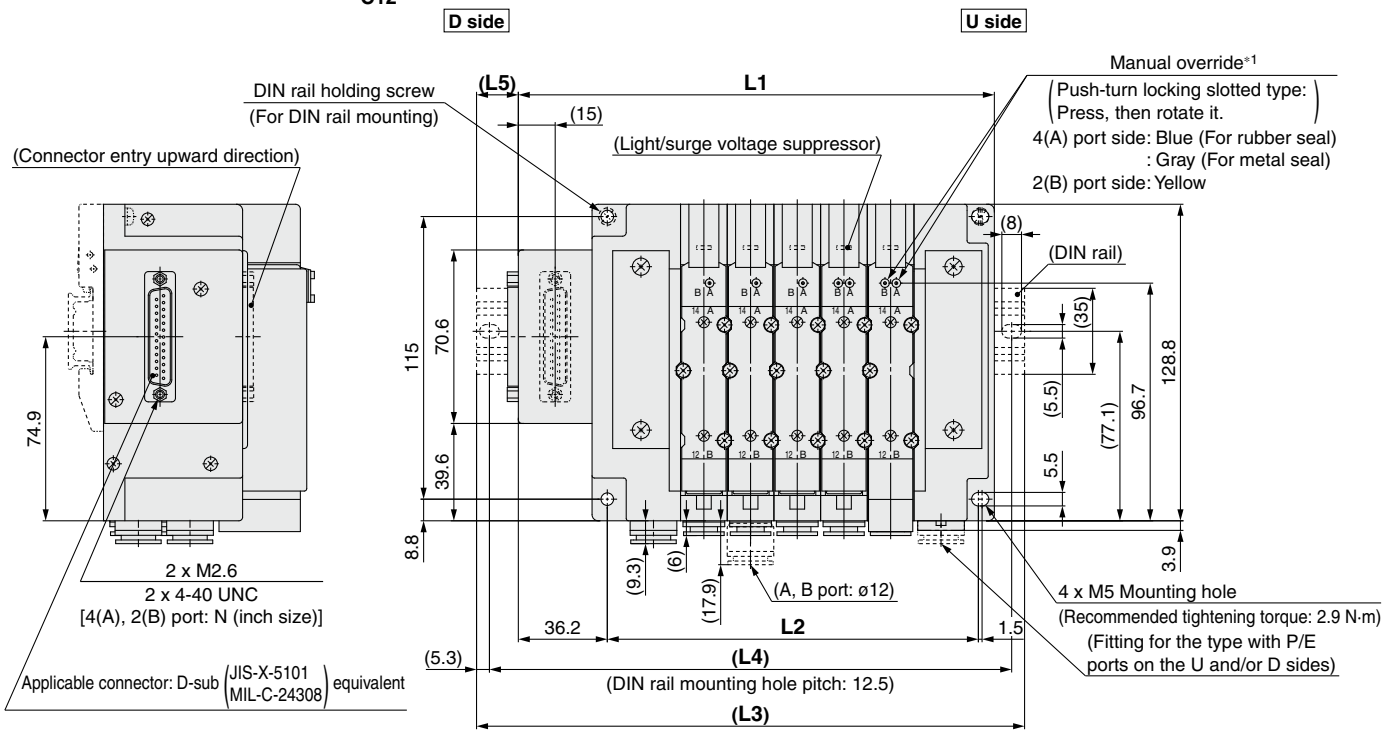

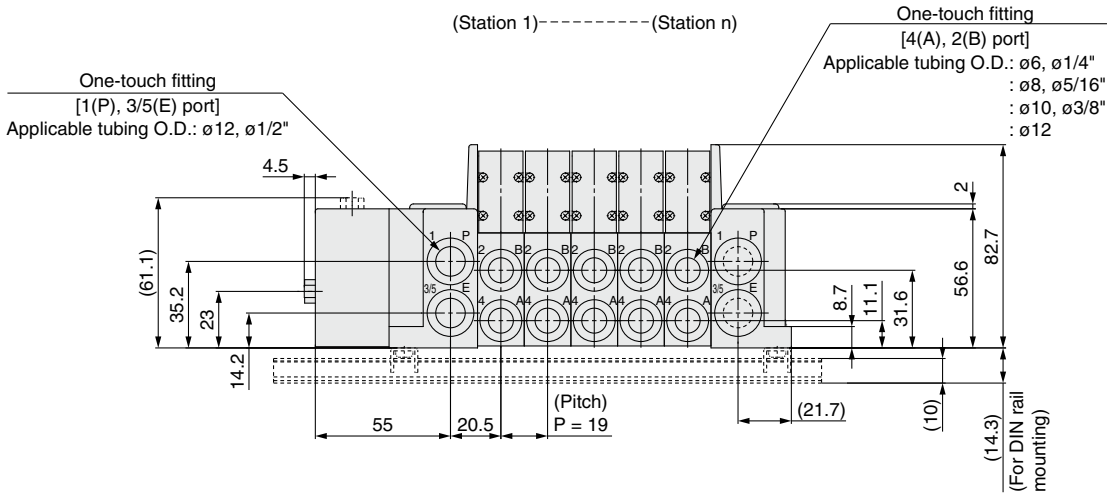

*1 Refer to page 159 for dimensions of the external pilot, silencer, elbow fittings, and slide locking manual override.
* These figures show the "SS5Y7-10FW2-05D-C10."
* Refer to page 164 for dimensions of A or B port top-ported type.

n: Stations	2	3	4	5	6	7	8	9	10	11	12	13	14	15	16	17	18	19	20	21	22	23	24
L1	136.7	155.7	174.7	193.7	212.7	231.7	250.7	269.7	288.7	307.7	326.7	345.7	364.7	383.7	402.7	421.7	440.7	459.7	478.7	497.7	516.7	535.7	554.7
L2	94	113	132	151	170	189	208	227	246	265	284	303	322	341	360	379	398	417	436	455	474	493	512
L3	173	185.5	210.5	223	248	260.5	285.5	298	323	335.5	360.5	385.5	398	423	435.5	460.5	473	498	510.5	535.5	548	573	585.5
L4	162.5	175	200	212.5	237.5	250	275	287.5	312.5	325	350	375	387.5	412.5	425	450	462.5	487.5	500	525	537.5	562.5	575
L5	20.5	17	20	17	20	16.5	19.5	16.5	19.5	16	19	22	19	22	18.5	21.5	18.5	21.5	18	21	18	21	17.5

Plug-in Connector Connecting Base | Type 10/Side Ported | Flat Ribbon Cable

Dimensions: SY3000 Series

SS5Y3-10 P / PG / PH **1** / **2** - **Stations** U / D / B - C2 / C3, N1 / C4, N3 / C6, N7 **(D)**

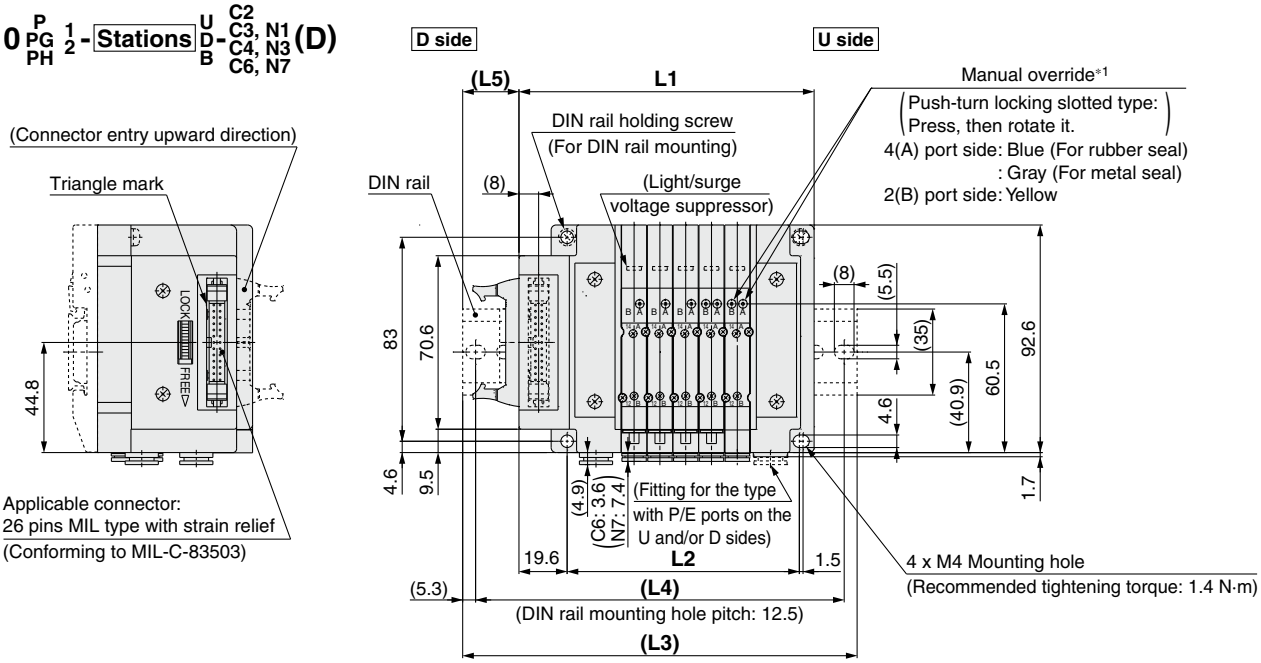

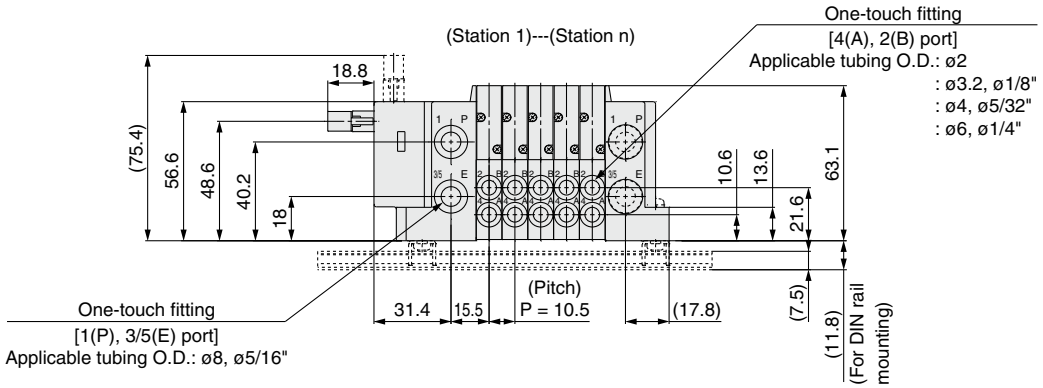

*1 Refer to page 157 for dimensions of the external pilot, silencer, elbow fittings, and slide locking manual override.
* These figures show the "SS5Y3-10P2-05D-C6."
* Refer to page 162 for dimensions of A or B port top-ported type.
* Only connectors are different for 10PG and 10PH. L1 to L5 dimensions are the same as 10P type.

10PG (20 pins)	10PH (10 pins)
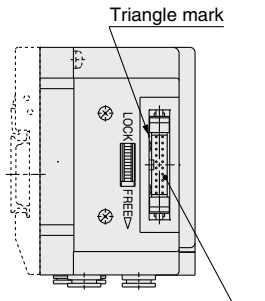	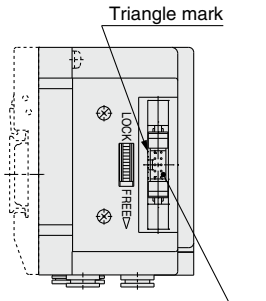
Applicable connector: 20 pins MIL type with strain relief (Conforming to MIL-C-83503)	Applicable connector: 10 pins MIL type with strain relief (Conforming to MIL-C-83503)

n: Stations	2	3	4	5	6	7	8	9	10	11	12	13	14	15	16	17	18	19	20	21	22	23	24
L1	88.6	99.1	109.6	120.1	130.6	141.1	151.6	162.1	172.6	183.1	193.6	204.1	214.6	225.1	235.6	246.1	256.6	267.1	277.6	288.1	298.6	309.1	319.6
L2	63	73.5	84	94.5	105	115.5	126	136.5	147	157.5	168	178.5	189	199.5	210	220.5	231	241.5	252	262.5	273	283.5	294
L3	123	135.5	148	160.5	160.5	173	185.5	198	210.5	223	223	235.5	248	260.5	273	285.5	298	298	310.5	323	335.5	348	360.5
L4	112.5	125	137.5	150	150	162.5	175	187.5	200	212.5	212.5	225	237.5	250	262.5	275	287.5	287.5	300	312.5	325	337.5	350
L5	20.5	21.5	22.5	23.5	18	19	20	21	22	23	18	19	20	21	22	23	23.5	18.5	19.5	20.5	21.5	22.5	23.5

Plug-in Connector Connecting Base | Type 10/Side Ported | Flat Ribbon Cable

Dimensions: SY5000 Series

SS5Y5-10 P/PG/PH 1/2 - Stations U/D/B C4, N3 / C6, N7 / C8, N9 (D)

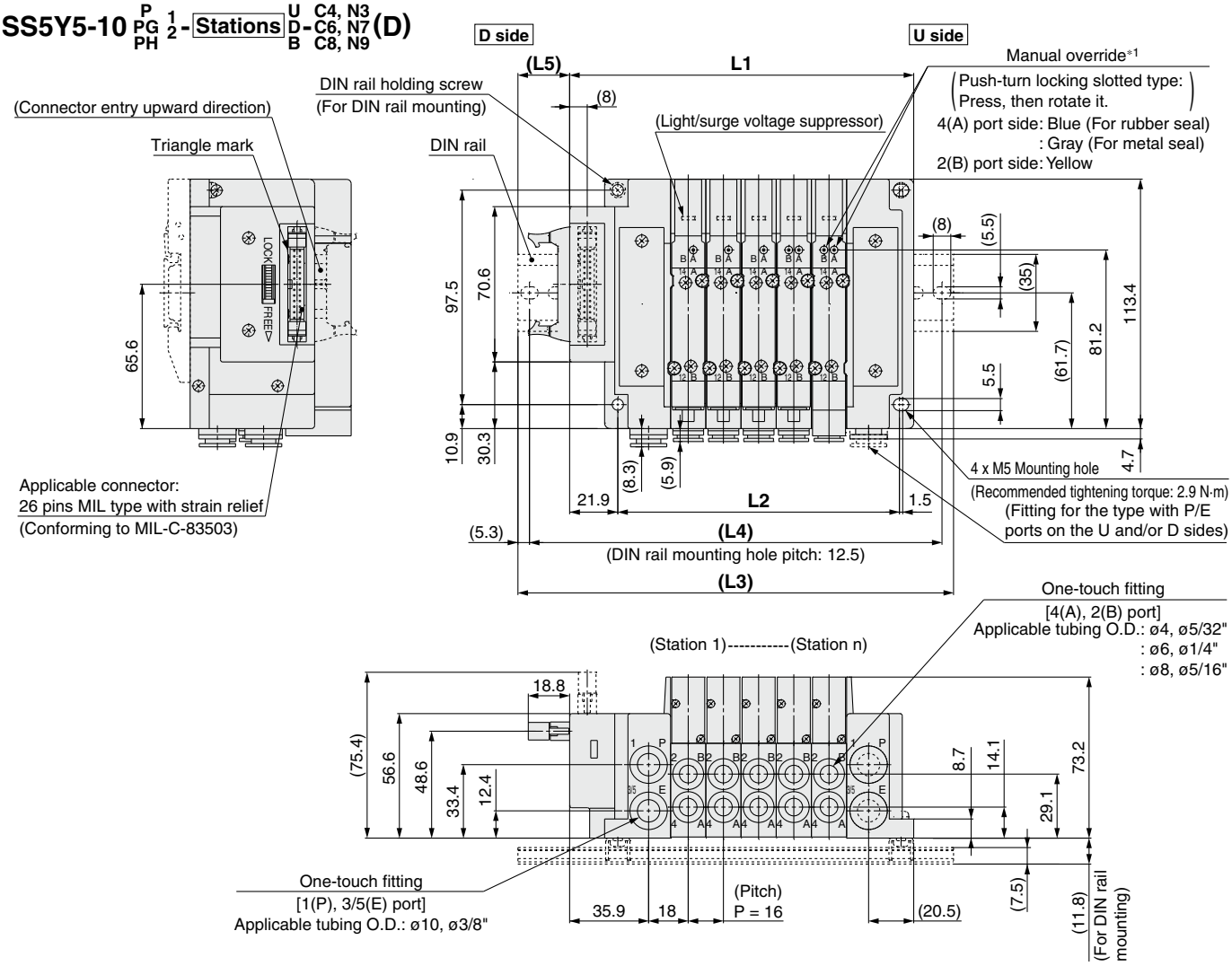

10PG (20 pins)	10PH (10 pins)
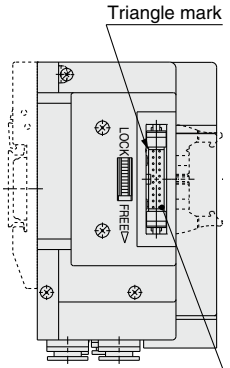	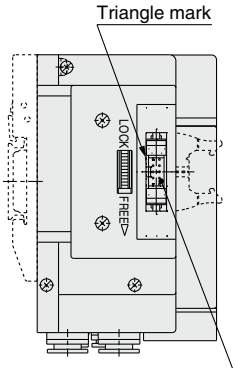
Applicable connector: 20 pins MIL type with strain relief (Conforming to MIL-C-83503)	Applicable connector: 10 pins MIL type with strain relief (Conforming to MIL-C-83503)

*1 Refer to page 158 for dimensions of the external pilot, silencer, elbow fittings, and slide locking manual override.

* These figures show the "SS5Y5-10P2-05D-C8."

* Refer to page 163 for dimensions of A or B port top-ported type.

* Only connectors are different for 10PG and 10PH. L1 to L5 dimensions are the same as 10P type.

n: Stations	2	3	4	5	6	7	8	9	10	11	12	13	14	15	16	17	18	19	20	21	22	23	24
L1	108.4	124.4	140.4	156.4	172.4	188.4	204.4	220.4	236.4	252.4	268.4	284.4	300.4	316.4	332.4	348.4	364.4	380.4	396.4	412.4	428.4	444.4	460.4
L2	80	96	112	128	144	160	176	192	208	224	240	256	272	288	304	320	336	352	368	384	400	416	432
L3	148	160.5	173	198	210.5	223	235.5	260.5	273	285.5	298	323	335.5	348	373	385.5	398	410.5	435.5	448	460.5	485.5	498
L4	137.5	150	162.5	187.5	200	212.5	225	250	262.5	275	287.5	312.5	325	337.5	362.5	375	387.5	400	425	437.5	450	475	487.5
L5	23	21	19.5	24	22	20.5	18.5	23	21.5	19.5	18	22.5	20.5	19	23.5	21.5	20	18	22.5	21	19	23.5	22

Plug-in Connector Connecting Base | Type 10/Side Ported | Flat Ribbon Cable

Dimensions: SY7000 Series

SS5Y7-10 P/PG/PH D 1/2 - Stations U/D/B - C6, N7 / C8, N9 / C10, N11 / C12 (D)

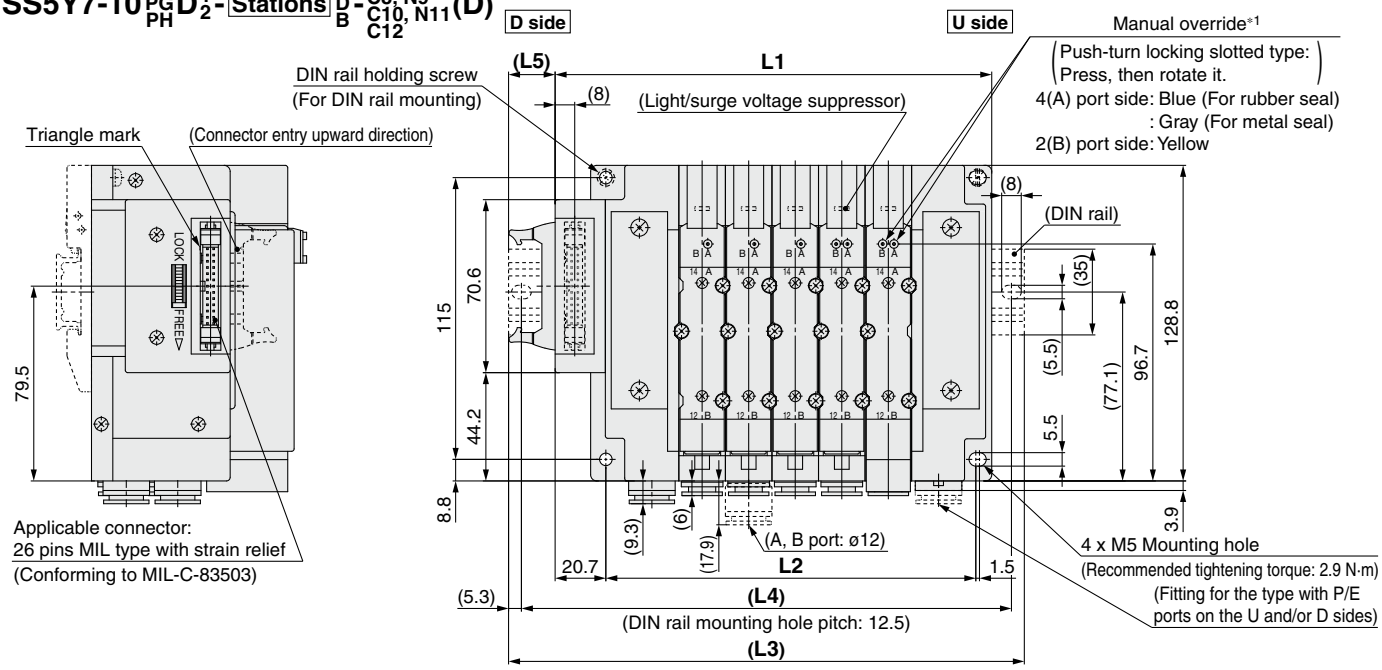

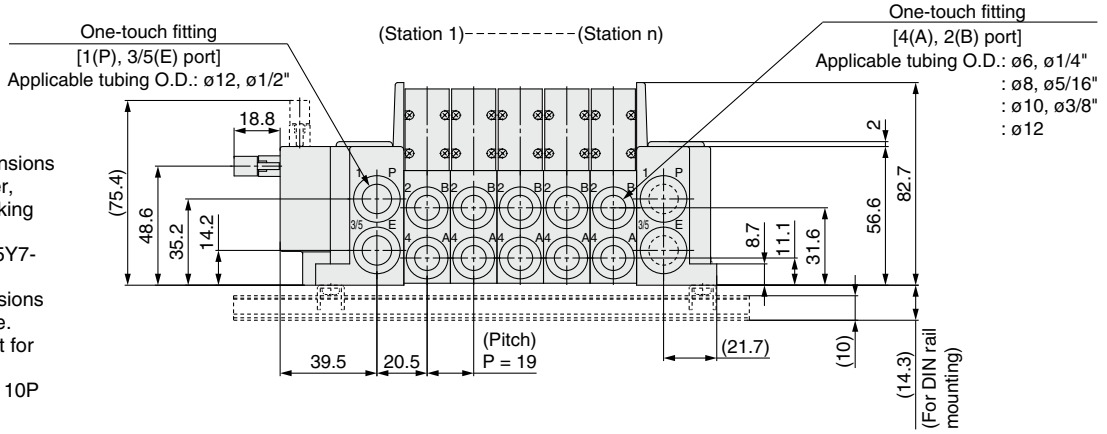

*1 Refer to page 159 for dimensions of the external pilot, silencer, elbow fittings, and slide locking manual override.
* These figures show the "SS5Y7-10P2-05D-C8."
* Refer to page 164 for dimensions of A or B port top-ported type.
* Only connectors are different for 10PG and 10PH. L1 to L5 dimensions are the same as 10P type.

10PG (20 pins)	10PH (10 pins)
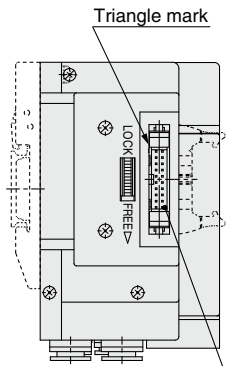	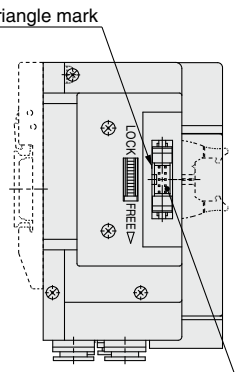
Applicable connector: 20 pins MIL type with strain relief (Conforming to MIL-C-83503)	Applicable connector: 10 pins MIL type with strain relief (Conforming to MIL-C-83503)

n: Stations	2	3	4	5	6	7	8	9	10	11	12	13	14	15	16	17	18	19	20	21	22	23	24
L1	121.2	140.2	159.2	178.2	197.2	216.2	235.2	254.2	273.2	292.2	311.2	330.2	349.2	368.2	387.2	406.2	425.2	444.2	463.2	482.2	501.2	520.2	539.2
L2	94	113	132	151	170	189	208	227	246	265	284	303	322	341	360	379	398	417	436	455	474	493	512
L3	160.5	173	198	210.5	235.5	248	273	285.5	310.5	323	348	360.5	385.5	398	423	435.5	460.5	485.5	498	523	535.5	560.5	573
L4	150	162.5	187.5	200	225	237.5	262.5	275	300	312.5	337.5	350	375	387.5	412.5	425	450	475	487.5	512.5	525	550	562.5
L5	22.5	19.5	22.5	19	22	19	22	18.5	21.5	18.5	21.5	18	21	18	21	17.5	20.5	23.5	20.5	23.5	20	23	20

Plug-in Connector Connecting Base

D-sub Connector | Flat Ribbon Cable

Type 12
Top Ported

SY3000/5000/7000 Series

How to Order Manifolds

Refer to pages 162 to 164 for the dimensions of Type 12/Top-ported type.

SS5Y 3 – 12 F 1 – 05 U □ – □ □

❶ ❷ ❸ ❹ ❺ ❻ ❼ ❽

❶ Series

3	SY3000
5	SY5000
7	SY7000

❷ Connector type

F: D-sub connector <IP40> (25 pins)

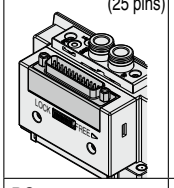

FW: D-sub connector <IP67> (25 pins)

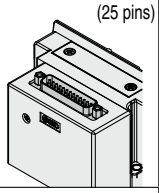

P: Flat ribbon cable (26 pins)

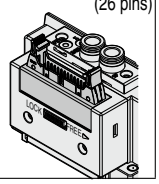

PG: Flat ribbon cable (20 pins)

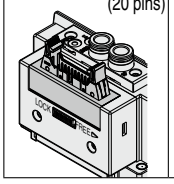

PH: Flat ribbon cable (10 pins)

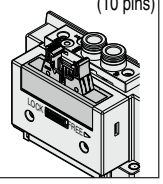

❸ Connector entry direction

1: Upward

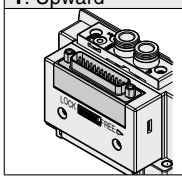

2: Lateral

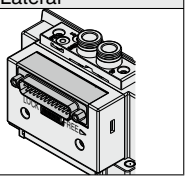

∗ The connector entry direction for connector type "FW" D-sub connector <IP67> cannot be rotated. If it is necessary to change, order the connector block assembly (page 183) separately.

❹ Valve stations

F/FW: D-sub connector (25 pins)

Symbol	Stations	Note
02	2 stations	Double wiring∗1
⋮	⋮	
12	12 stations	
02	2 stations	Specified layout∗2 (Up to 24 solenoids available)
⋮	⋮	
24	24 stations	

P: Flat ribbon cable (26 pins)

Symbol	Stations	Note
02	2 stations	Double wiring∗1
⋮	⋮	
12	12 stations	
02	2 stations	Specified layout∗2 (Up to 24 solenoids available)
⋮	⋮	
24	24 stations	

PG: Flat ribbon cable (20 pins)

Symbol	Stations	Note
02	2 stations	Double wiring∗1
⋮	⋮	
09	9 stations	
02	2 stations	Specified layout∗2 (Up to 18 solenoids available)
⋮	⋮	
18	18 stations	

PH: Flat ribbon cable (10 pins)

Symbol	Stations	Note
02	2 stations	Double wiring∗1
⋮	⋮	
04	4 stations	
02	2 stations	Specified layout∗2 (Up to 8 solenoids available)
⋮	⋮	
08	8 stations	

∗1 Double wiring: 2-position single, double, 3-position, and 4-position valves can be used on all manifold stations.
Use of a 2-position single solenoid will result in an unused control signal. If this is not desired, order with a specified layout.

∗2 Specified layout: Indicate the wiring specifications on the manifold specification sheet. (Note that 2-position double, 3-position, and 4-position valves cannot be used where single wiring has been specified.)

∗ This also includes the number of the blanking plate assembly.

❺ P, E port entry

U∗1	U side (2 to 10 stations)
D∗1	D side (2 to 10 stations)
B	Both sides (2 to 24 stations)

∗1 ❻ For type "S", SUP/EXH block assembly with a built-in silencer, choose U or D for P, E port entry.

❻ SUP/EXH block assembly

Nil	Internal pilot
S	Internal pilot, Built-in silencer
R	External pilot

∗ The P and E ports are only available on the U and D sides for the built-in silencer type. 3/5(E) port is plugged. The silencer exhaust port is located on the opposite side of the P and E port entry. (Example: When the P and E port entry is on the D side, the silencer exhaust port is on the U side.)

❼ P, E port size (One-touch fittings)

Symbol	SY3000	SY5000	SY7000
Nil	ø8	ø10	ø12
N	ø5/16"	ø3/8"	ø1/2"

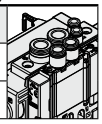

∗ For N, sizes are in inches.

❽ Mounting

Nil	Direct mounting	
D	DIN rail mounting (With DIN rail)	
D0	DIN rail mounting (Without DIN rail)	
D3	For 3 stations	Specify a length longer than that of the standard rail.
⋮	⋮	
D24	For 24 stations	

∗ Refer to page 295 for the fixation of DIN rail mounting type manifold.

How to Order Manifold Assembly

Example (SS5Y3-12F1-□)

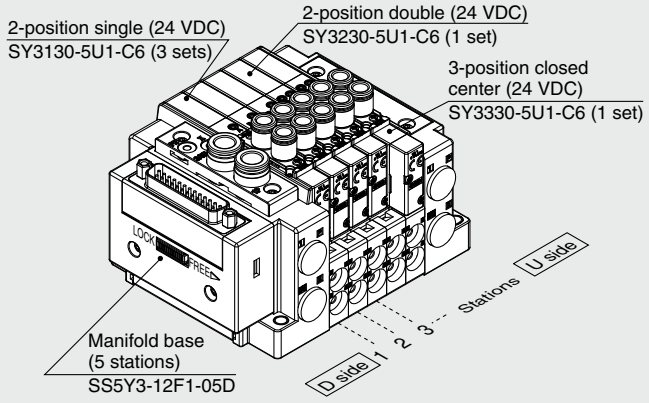

SS5Y3-12F1-05D ····· 1 set (Type 12 5-station manifold base part no.)
∗SY3130-5U1-C6 ····· 3 sets (2-position single part no.)
∗SY3230-5U1-C6 ····· 1 set (2-position double part no.)
∗SY3330-5U1-C6 ····· 1 set (3-position closed center part no.)
The asterisk denotes the symbol for the assembly. Prefix it to the part numbers of the valve, etc.

- For the valve arrangement, the valve closest to the D side is considered the 1st station.
- Under the manifold part number, state the valves to be mounted in order starting with the 1st station as shown in the figure above. If the arrangement becomes too complicated, specify the details on a manifold specification sheet.

How to Order Valves (With mounting screw)

Refer to page 15 for valve specifications.

SY 3 1 3 0 □ □ □ □ – 5 □ □ 1 – C6 □ – □

❶ ❷ ❸ ❹ ❺ ❻ ❼ ❽ ❾ ❿ ⓫ ⓬ ⓭

❸: Top ported

❶ Series

3	SY3000
5	SY5000
7	SY7000

❷ Type of actuation

1	2-position	Single
2		Double
3	3-position	Closed center
4		Exhaust center
5		Pressure center
A*1	4-position dual 3-port	N.C./N.C.
B*1		N.O./N.O.
C*1		N.C./N.O.

*1 Only the rubber seal type is available for the 4-position dual 3-port valve.

❸ Seal type

0	Rubber seal
1	Metal seal

❹ Pilot type

Nil	Internal pilot
R	External pilot

❺ Back pressure check valve (Built-in valve type)

Nil	None
H	Built-in

* Only the rubber seal type is available. A manifold installed type is available if a back pressure check valve with a metal seal is required. Refer to page 212 for ordering examples. However, it is not recommended to use the built-in valve type and the manifold installed type at the same time because it will reduce the flow.
* The built-in valve type back pressure check valve is not available for the 3-position type or the SY7000.

❻ Pilot valve option

Nil	Standard (0.7 MPa)
B	Quick response type (0.7 MPa)
K*1	High pressure type (1.0 MPa)

*1 Only the metal seal type is available for the high pressure type.

❼ Coil type

Nil	Standard
T	With power saving circuit (Continuous duty type)

* Be sure to select the power saving circuit type if the valve is to be continuously energized for long periods of time.
* Be careful of the energizing time when the power saving circuit is selected. Refer to page 292 for details.

❽ Rated voltage

5	24 VDC
6	12 VDC

❾ Light/surge voltage suppressor and common specification

Symbol	With light	Surge voltage suppressor	Common specification
Nil	—	—	Non-polar
R	—	●	
U	●		
S	—		Positive common
Z	●		
NS	—		Negative common
NZ	●		

* For the non-polar type, be careful of surge voltage intrusion. Refer to page 293 for details.
* Only "Z" and "NZ" types are available with a power saving circuit.

❿ Manual override

Nil: Non-locking push type 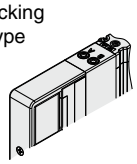	**D**: Push-turn locking slotted type 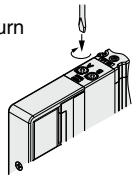
E: Push-turn locking lever type 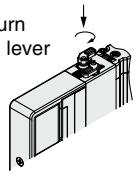	**F**: Slide locking type 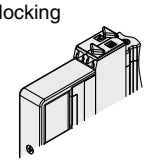

* Refer to page 34 for the safety slide locking manual override.

⓫ A, B port size

Thread piping

Symbol	Port size	Applicable series
M5	M5 x 0.8	SY3000
01	1/8	SY5000
02	1/4	SY7000

One-touch fitting (Metric)

Symbol	A, B port	SY3000	SY5000	SY7000
C2	ø2	●	—	—
C3	ø3.2	●	—	—
C4	ø4	●	●	—
C6	ø6	●	●	●
C8	ø8	—	●	●
C10	ø10	—	—	●
C12	ø12	—	—	●

One-touch fitting (Inch)

Symbol	A, B port	SY3000	SY5000	SY7000
N1	ø1/8"	●	—	—
N3	ø5/32"	●	●	—
N7	ø1/4"	●	●	●
N9	ø5/16"	—	●	●
N11	ø3/8"	—	—	●

⓬ Thread type

Nil	Rc
F	G
N	NPT
T	NPTF

* Only Nil is available for M5.

⓭ Type of mounting screw

Nil	Round head combination screw
B	Hexagon socket head cap screw
K	Round head combination screw (Drop prevention type)
H	Hexagon socket head cap screw (Drop prevention type)

* For "K" and "H," the valve body cover has a drop prevention construction to stop the mounting screws from falling out when the valve is removed for maintenance, etc.
* **When ordering a valve individually, the base gasket is not included.**
  Since the base gasket is attached to the manifold, please order the base gasket separately if it is needed for maintenance. Refer to page 198 for base gasket and mounting screw part numbers.
* "B" and "H" cannot be selected for the individual SUP/EXH spacer assembly or interface regulator.

Protective class class Ⅲ (Mark: ⧫)

Electrical Wiring Specifications

D-sub connector

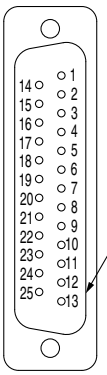

If alignment is not specified, the internal wiring will be double wiring (connected to SOL. a and SOL. b) regardless of number of stations, valve types, and option types.

Connector terminal no.

		Terminal no.	Polarity	
Station 1	SOL.a	1	(–)	(+)
	SOL.b	14	(–)	(+)
Station 2	SOL.a	2	(–)	(+)
	SOL.b	15	(–)	(+)
Station 3	SOL.a	3	(–)	(+)
	SOL.b	16	(–)	(+)
Station 4	SOL.a	4	(–)	(+)
	SOL.b	17	(–)	(+)
Station 5	SOL.a	5	(–)	(+)
	SOL.b	18	(–)	(+)
Station 6	SOL.a	6	(–)	(+)
	SOL.b	19	(–)	(+)
Station 7	SOL.a	7	(–)	(+)
	SOL.b	20	(–)	(+)
Station 8	SOL.a	8	(–)	(+)
	SOL.b	21	(–)	(+)
Station 9	SOL.a	9	(–)	(+)
	SOL.b	22	(–)	(+)
Station 10	SOL.a	10	(–)	(+)
	SOL.b	23	(–)	(+)
Station 11	SOL.a	11	(–)	(+)
	SOL.b	24	(–)	(+)
Station 12	SOL.a	12	(–)	(+)
	SOL.b	25	(–)	(+)
	COM.	13	(+)	(–)
			Positive common	**Negative common**

∗ When using a valve with no polarity, either positive common or negative common can be used.

Specified Layout

(25 pins)

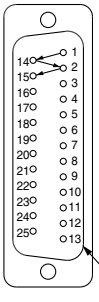

A mixture of single and double wiring can be specified on the manifold specification sheet. The maximum number of stations is determined according to the number of solenoids. The total number of solenoids should be 24 or less. 1 solenoid is required for the 2-position single, and 2 solenoids for the 2-position double, 3-position, and 4-position.

Cable Assembly

AXT100-DS25- 015 / 030 / 050 **(N)** [IP40]

Nil: Metric
N: Inch

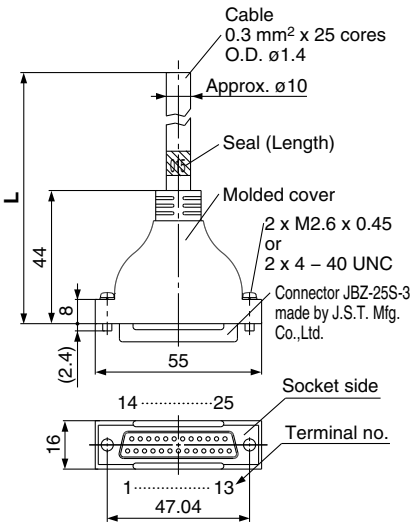

SY30M-DS25- 015 / 030 / 050 **(N)** [IP67]

Nil: Metric
N: Inch

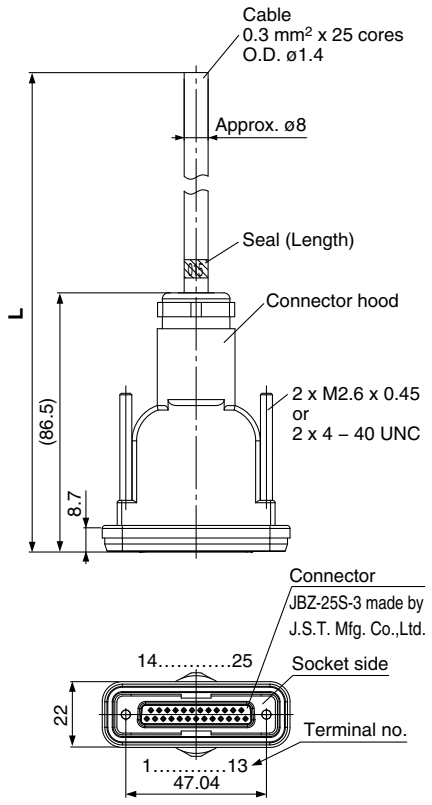

D-sub connector cable assembly [IP40]

Cable length (**L**)	Assembly part no.	Note
1.5 m	AXT100-DS25-015	Cable 0.3 mm² x 25 cores
3 m	AXT100-DS25-030	
5 m	AXT100-DS25-050	

∗ When using a standard commercial connector, use a 25-pin type female connector conforming to MIL-C-24308.
∗ Cannot be used for movable wiring
∗ Lengths other than the above are also available. Please contact SMC for details.

D-sub connector cable assembly [IP67]

Cable length (**L**)	Assembly part no.	Note
1.5 m	SY30M-DS25-015	Cable 0.3 mm² x 25 cores
3 m	SY30M-DS25-030	
5 m	SY30M-DS25-050	

∗ Be sure to use the connector cable assembly in the table, to satisfy enclosure IP67.
∗ Cannot be used for movable wiring

Electrical characteristics

Item	Property
Conductor resistance Ω/km, 20°C	65 or less
Voltage limit V, 1 minute, AC	1000
Insulation resistance MΩ/km, 20°C	5 or more

∗ The minimum bending radius of the D-sub connector cable is 20 mm.

Connector Manufacturer's Example

- Fujitsu Limited
- Japan Aviation Electronics Industry, Limited
- J.S.T. Mfg. Co., Ltd.
- HIROSE ELECTRIC CO., LTD.

D-sub connector cable assembly terminal numbers

Terminal no.	1	2	3	4	5	6	7	8	9	10	11	12	13	14	15	16	17	18	19	20	21	22	23	24	25
Lead wire color	Black	Brown	Red	Orange	Yellow	Pink	Blue	Purple	Gray	White	White	Yellow	Orange	Yellow	Pink	Blue	Purple	Gray	Orange	Red	Brown	Pink	Gray	Black	White
Dot marking	None	None	None	None	None	None	None	White	Black	Black	Red	Red	Red	Black	Black	White	None	None	Black	White	White	Red	Red	White	None

Electrical Wiring Specifications

Flat ribbon cable connector

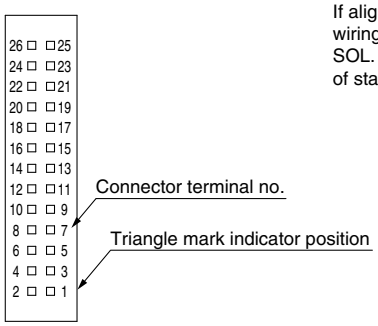

If alignment is not specified, the internal wiring will be double wiring (connected to SOL. a and SOL. b) regardless of number of stations, valve types, and option types.

P: Flat ribbon cable (26 pins)

<Double wiring>

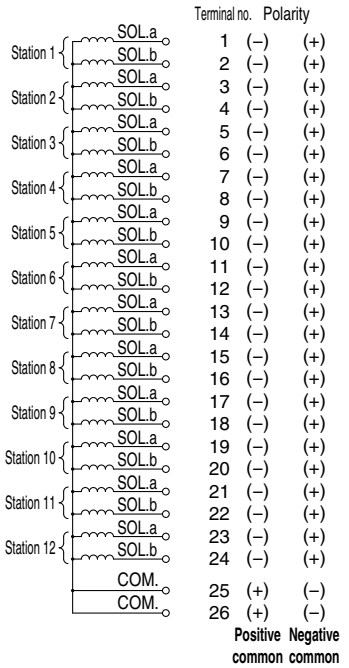

PG: Flat ribbon cable (20 pins)

<Double wiring>

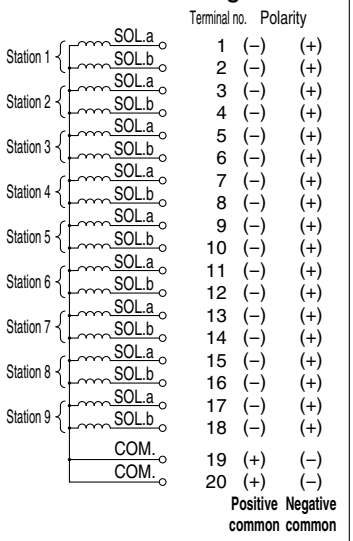

PH: Flat ribbon cable (10 pins)

<Double wiring>

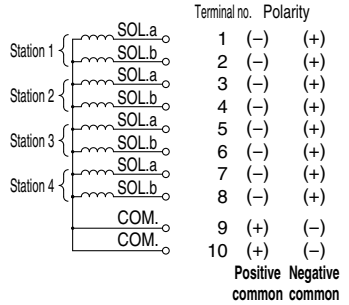

* When using a valve with no polarity, either positive common or negative common can be used.

Flat Ribbon Cable Assembly

AXT100-FC 10 / 20 / 26 - 1 / 2 / 3

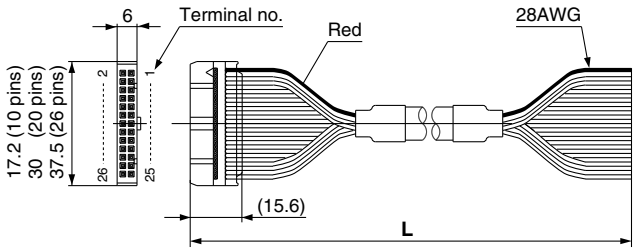

Flat ribbon cable connector assembly

Cable length (**L**)	Assembly part no.		
	26 pins	20 pins	10 pins
1.5 m	AXT100-FC26-1	AXT100-FC20-1	AXT100-FC10-1
3 m	AXT100-FC26-2	AXT100-FC20-2	AXT100-FC10-2
5 m	AXT100-FC26-3	AXT100-FC20-3	AXT100-FC10-3

∗ When using a standard commercial connector, use a 26-pin, 20-pin, or 10-pin type connector conforming to MIL-C-83503 with strain relief.
∗ Cannot be used for movable wiring
∗ Lengths other than the above are also available. Please contact SMC for details.

Connector Manufacturer's Example

- HIROSE ELECTRIC CO., LTD.
- 3M Japan Limited
- Fujitsu Limited
- Japan Aviation Electronics Industry, Limited
- J.S.T. Mfg. Co., Ltd.
- Oki Electric Cable Co., Ltd.

Specified Layout

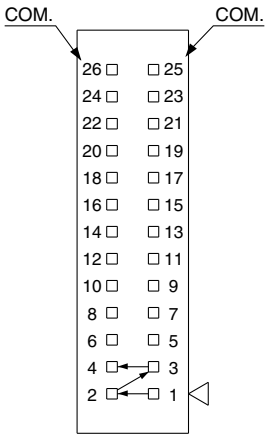

(P: 26 pins)

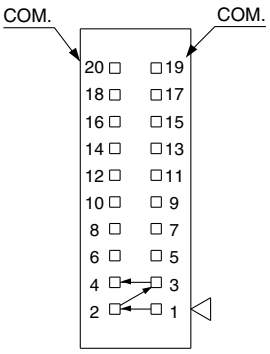

(PG: 20 pins)

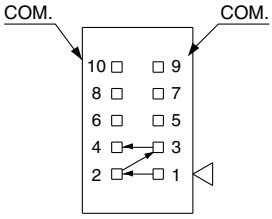

(PH: 10 pins)

A mixture of single and double wiring can be specified on the manifold specification. The maximum number of stations is determined according to the number of solenoids. The total number of solenoids should be 24 or less for P, 18 or less for PG, and 8 or less for PH. 1 solenoid is required for the 2-position single, and 2 solenoids for the 2-position double, 3-position, and 4-position.

Type 10
Side Ported

Type 11
Bottom Ported

Plug-in Connector Connecting Base

Terminal Block Box (Spring Type)

SY3000/5000/7000 Series

How to Order Manifolds

Refer to pages 160 (SY5000) and 161 (SY7000) for the dimensions of Type 11/Bottom-ported type.

SS5Y ❶3 – ❷10 TC – ❸05 ❹D ❺□ – ❻C6 ❼□

❶ Series

3	SY3000
5	SY5000
7	SY7000

❷ Type

10	Side ported
11	Bottom ported ∗1

∗1 The SY5000 manifold base is used for the bottom-ported SY3000. When ordering, refer to the "Plug-in Mixed Mounting Type Manifold" (from page 165).

❹ P, E port entry

U	U side (2 to 10 stations)
D	D side (2 to 10 stations)
B	Both sides (2 to 24 stations)

❺ SUP/EXH block assembly

Nil	Internal pilot
S	Internal pilot, Built-in silencer
R	External pilot

∗ 3/5(E) port is plugged for the built-in silencer type.
∗ When the built-in silencer type is used, keep the exhaust port from coming into direct contact with water or other liquids.

❸ Valve stations

TC: Spring type terminal block box

Symbol	Stations	Note
02	2 stations	Double wiring ∗1
⋮	⋮	
16	16 stations	
02	2 stations	Specified layout ∗2 (Up to 32 solenoids available)
⋮	⋮	
24	24 stations	

∗1 Double wiring: 2-position single, double, 3-position, and 4-position valves can be used on all manifold stations.
Use of a 2-position single solenoid will result in an unused control signal. If this is not desired, order with a specified layout.
∗2 Specified layout: Indicate the wiring specifications with the manifold specification sheet. (Note that 2-position double, 3-position, and 4-position valves cannot be used where single wiring has been specified.)
∗ This also includes the number of the blanking plate assembly.

❼ Mounting and Option

Symbol	Mounting	Option
Nil	Direct mounting	None
AA		Name plate (with station number)
BA		Name plate (without station number)
D□	DIN rail mounting	Without name plate
A□		Name plate (with station number)
B□		Name plate (without station number)

DIN Rail Option

Nil	DIN rail mounting (with DIN rail)
0	DIN rail mounting (without DIN rail)
3	For 3 stations: Specify a length longer than that of the standard rail.
⋮	⋮
24	For 24 stations

∗ Enter the number of stations inside □. (Refer to "DIN Rail Option" above.)
∗ Only direct mounting is available for the type 11 bottom-ported type.

❻ A, B port size (Metric/One-touch fitting)

Symbol		A, B port	Type 10/Side ported SY3000	SY5000	SY7000	Type 11/Bottom ported SY5000	SY7000
C2	Straight	ø2	●	—	—	—	—
C3		ø3.2	●	—	—	—	—
C4		ø4	●	●	—	●	—
C6		ø6	●	●	●	●	●
C8		ø8	—	●	●	●	●
C10		ø10	—	—	●	—	●
C12		ø12	—	—	●	—	●
CM∗1		Straight port, mixed sizes	●	●	●	●	●
L4	Elbow ∗2 Upward	ø4	●	●	—	—	—
L6		ø6	●	●	●	—	—
L8		ø8	—	●	●	—	—
L10		ø10	—	—	●	—	—
L12		ø12	—	—	●	—	—
B4	Elbow ∗2 Downward	ø4	●	●	—	—	—
B6		ø6	●	●	●	—	—
B8		ø8	—	●	●	—	—
B10		ø10	—	—	●	—	—
B12		ø12	—	—	●	—	—
LM∗1		Elbow port, mixed sizes (Including upward and downward piping)	●	●	●	—	—
P, E port size (One-touch fittings)			ø8	ø10	ø12	ø10	ø12

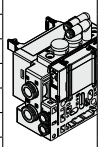
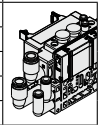
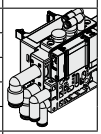

A, B port size (Inch/One-touch fitting)

Symbol		A, B port	Type 10/Side ported SY3000	SY5000	SY7000	Type 11/Bottom ported SY5000	SY7000
N1	Straight	ø1/8"	●	—	—	—	—
N3		ø5/32"	●	●	—	●	—
N7		ø1/4"	●	●	●	●	●
N9		ø5/16"	—	●	●	●	●
N11		ø3/8"	—	—	●	—	●
CM∗1		Straight port, mixed sizes	●	●	●	●	●
LN3	Elbow ∗2 Upward	ø5/32"	●	—	—	—	—
LN7		ø1/4"	●	●	—	—	—
LN9		ø5/16"	—	●	—	—	—
LN11		ø3/8"	—	—	●	—	—
BN3	Elbow ∗2 Downward	ø5/32"	●	—	—	—	—
BN7		ø1/4"	●	●	—	—	—
BN9		ø5/16"	—	●	—	—	—
BN11		ø3/8"	—	—	●	—	—
LM∗1		Elbow port, mixed sizes (Including upward and downward piping)	●	●	●	—	—
P, E port size (One-touch fittings)			ø5/16"	ø3/8"	ø1/2"	ø3/8"	ø1/2"

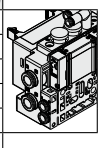
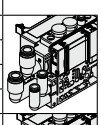
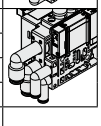

∗1 Indicate the sizes on the manifold specification sheet in the case of "CM" or "LM." The direction of P, E port fittings is the same as for the A, B port. If selecting "LM," indicate it on the manifold specification sheet for the P, E port fitting direction.
∗2 To avoid interference with the body or piping, select a downward elbow port when mounting the optional spacer assembly.

How to Order Manifold Assembly

Example (SS5Y3-10TC-□)

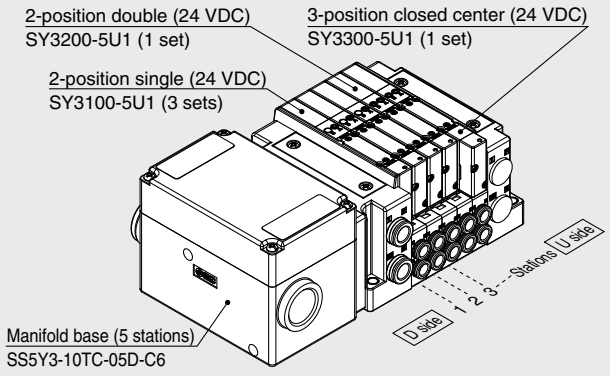

SS5Y3-10TC-05D-C6 ····· 1 set (Type 10 5-station manifold base part no.)
∗ **SY3100-5U1 ····· 3 sets (2-position single part no.)**
∗ **SY3200-5U1 ····· 1 set (2-position double part no.)**
∗ **SY3300-5U1 ····· 1 set (3-position closed center part no.)**
→The asterisk denotes the symbol for the assembly. Prefix it to the part numbers of the valve, etc.

- For the valve arrangement, the valve closest to the D side is considered the 1st station.
- Under the manifold part number, state the valves to be mounted in order starting with the 1st station as shown in the figure above. If the arrangement becomes too complicated, specify the details on a manifold specification sheet.

How to Order Valves (With mounting screw)

Refer to page 15 for valve specifications.

SY 3 1 0 0 □ □ □ □ – 5 □ □ 1 – □

❶ ❷ ❸ ❹ ❺ ❻ ❼ ❽ ❾ ❿ ⓫

● Base mounted

❶ Series

3	SY3000
5	SY5000
7	SY7000

❷ Type of actuation

1	2-position	Single
2		Double
3	3-position	Closed center
4		Exhaust center
5		Pressure center
A*1	4-position dual 3-port	N.C./N.C.
B*1		N.O./N.O.
C*1		N.C./N.O.

*1 Only the rubber seal type is available for the 4-position dual 3-port valve.

❸ Seal type

0	Rubber seal
1	Metal seal

❹ Pilot type

Nil	Internal pilot
R	External pilot

❺ Back pressure check valve (Built-in valve type)

Nil	None
H	Built-in

* Only the rubber seal type is available. A manifold installed type is available if a back pressure check valve with a metal seal is required. Refer to page 212 for ordering examples. However, it is not recommended to use the built-in valve type and the manifold installed type at the same time because it will reduce the flow.
* The built-in valve type back pressure check valve is not available for the 3-position type or the SY7000.

❻ Pilot valve option

Nil	Standard (0.7 MPa)
B	Quick response type (0.7 MPa)
K*1	High pressure type (1.0 MPa)

*1 Only the metal seal type is available for the high pressure type.

❼ Coil type

Nil	Standard
T	With power saving circuit (Continuous duty type)

* Be sure to select the power saving circuit type if the valve is to be continuously energized for long periods of time.
* Be careful of the energizing time when the power saving circuit is selected. Refer to page 292 for details.

❽ Rated voltage

5	24 VDC
6	12 VDC

❾ Light/surge voltage suppressor and common specification

Symbol	With light	Surge voltage suppressor	Common specification
Nil	—	—	Non-polar
R	—	●	
U	●		
S	—		Positive common
Z	●		
NS	—		Negative common
NZ	●		

* For the non-polar type, be careful of surge voltage intrusion.
  Refer to page 293 for details.
* Only "Z" and "NZ" types are available with a power saving circuit.

❿ Manual override

Nil: Non-locking push type 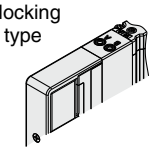	**D**: Push-turn locking slotted type 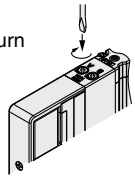
E: Push-turn locking lever type 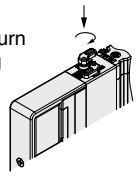	**F**: Slide locking type 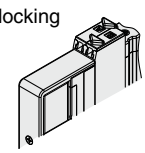

* Refer to page 34 for the safety slide locking manual override.

⓫ Type of mounting screw

Nil	Round head combination screw
B	Hexagon socket head cap screw
K	Round head combination screw (Drop prevention type)
H	Hexagon socket head cap screw (Drop prevention type)

* For "K" and "H," the valve body cover has a drop prevention construction to stop the mounting screws from falling out when the valve is removed for maintenance, etc.
* **When ordering a valve individually, the base gasket is not included.**
  Since the base gasket is attached to the manifold, please order the base gasket separately if it is needed for maintenance. Refer to page 198 for base gasket and mounting screw part numbers.
* "B" and "H" cannot be selected for the individual SUP/EXH spacer assembly, interface regulator, or double check spacer assembly with residual pressure release valve.

⚠ Protective class class Ⅲ (Mark: ⟨III⟩)

Chart
Valve Specifications
Valve Construction
Valve Replacement Parts
With Residual Pressure Release Valve
Vacuum Release Valve with Restrictor
With Pressure Sensor
Made to Order
Connector Connecting Base
D-sub, Flat Ribbon
Terminal Block
Lead Wire
Circular Connector
EX500
EX600
EX250
EX260
EX126
EX120
Common Dimensions
Mixed Mounting
Manifold Exploded View
Fitting, Plug Part Nos.
Manifold Options
Specific Product Precautions

Dimensions: SY3000 Series

SS5Y3-10TC-Stations U/D/B □-C2/C3, N1/C4, N3/C6, N7 (D)

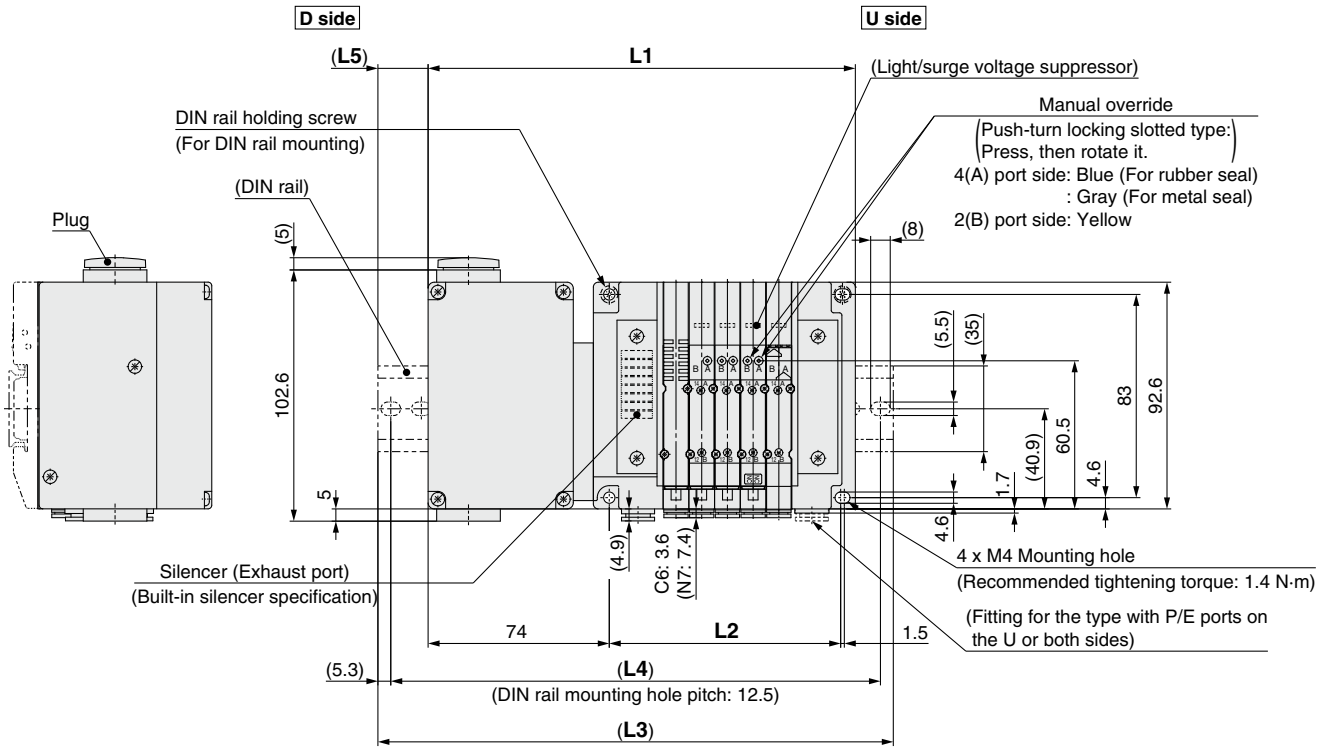

(Station 1) ----- (Station n)

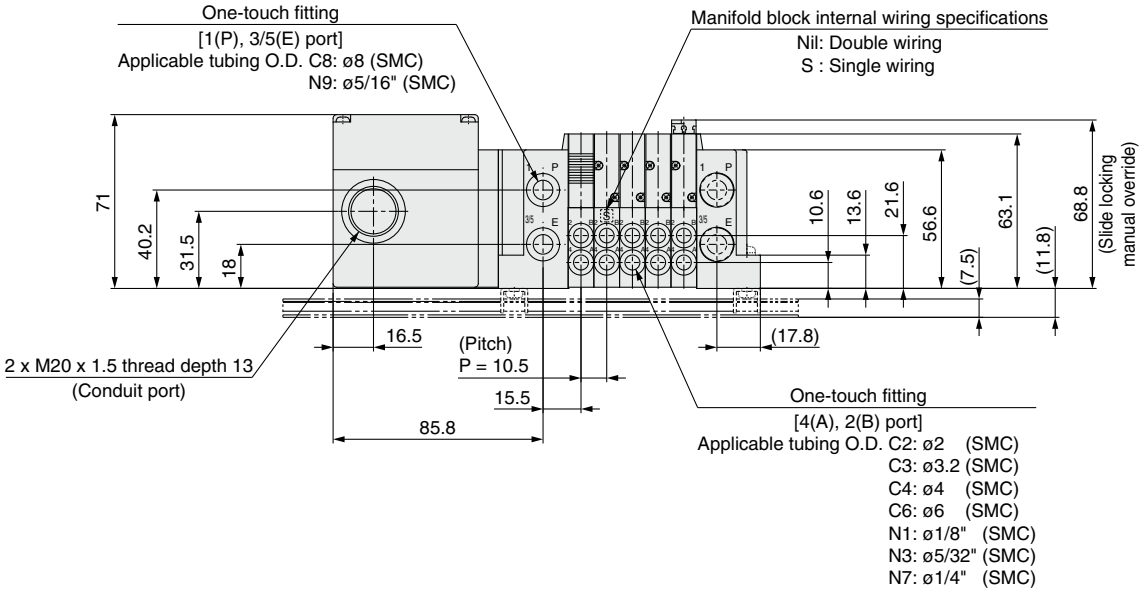

n: Stations	2	3	4	5	6	7	8	9	10	11	12	13	14	15	16	17	18	19	20	21	22	23	24
L1	143	153.5	164	174.5	185	195.5	206	216.5	227	237.5	248	258.5	269	279.5	290	300.5	311	321.5	332	342.5	353	363.5	374
L2	63	73.5	84	94.5	105	115.5	126	136.5	147	157.5	168	178.5	189	199.5	210	220.5	231	241.5	252	262.5	273	283.5	294
L3	173	185.5	198	210.5	223	235.5	235.5	248	260.5	273	285.5	298	298	310.5	323	335.5	348	360.5	360.5	373	385.5	398	410.5
L4	162.5	175	187.5	200	212.5	225	225	237.5	250	262.5	275	287.5	287.5	300	312.5	325	337.5	350	350	362.5	375	387.5	400
L5	17.5	18.5	19.5	20.5	21.5	22.5	17	18	19	20	21	22	17	18	19	20	21	22	16.5	17.5	18.5	19.5	20.5

Dimensions: SY5000 Series

SS5Y5-10TC-Stations U/D/B □- C4, N3 / C6, N7 / C8, N9 (D)

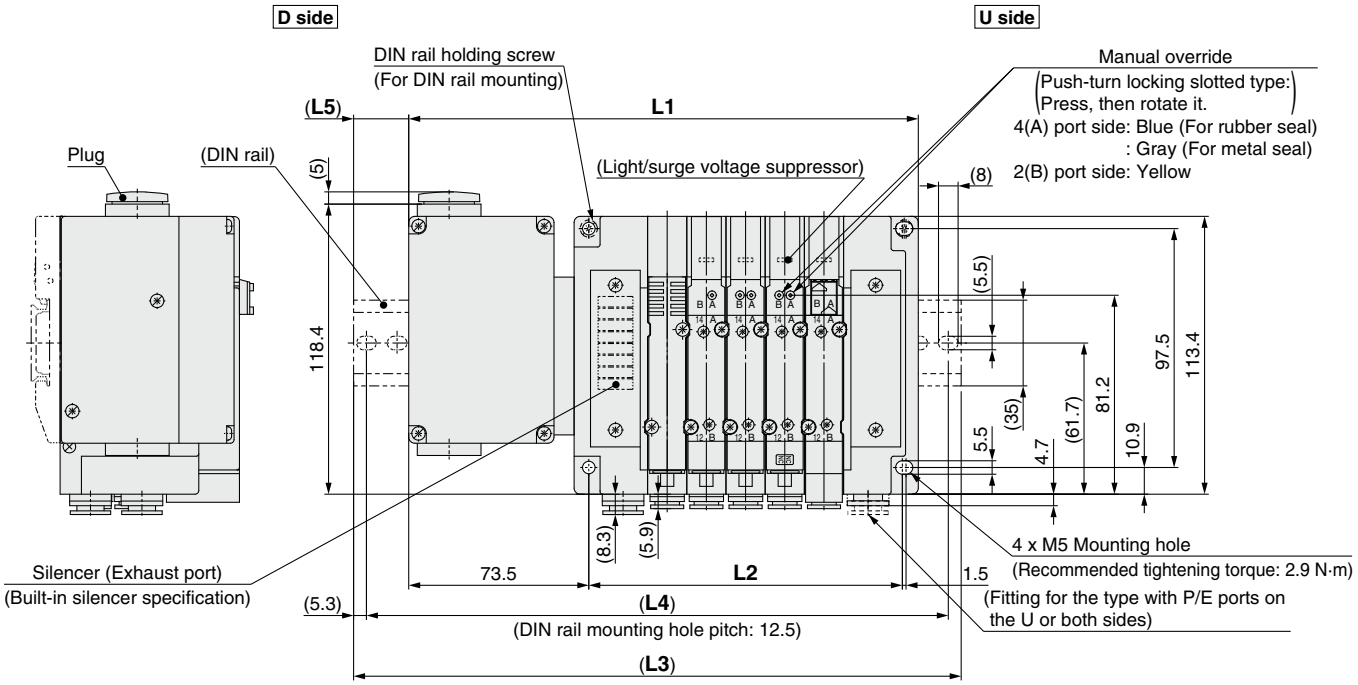

(Station 1) ---------- (Station n)

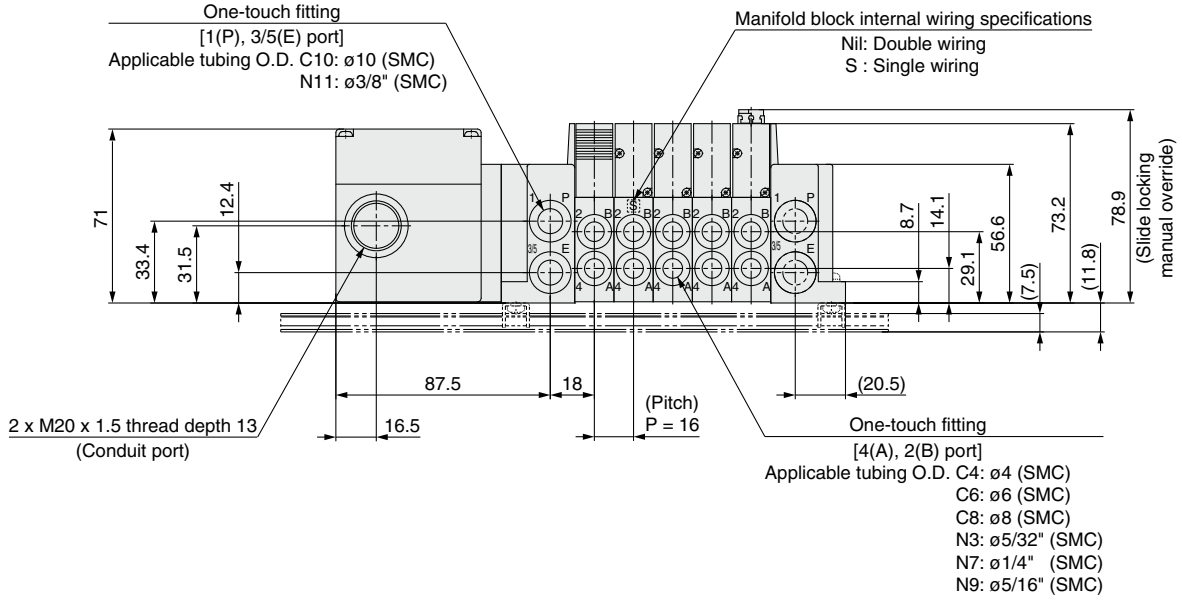

n: Stations	2	3	4	5	6	7	8	9	10	11	12	13	14	15	16	17	18	19	20	21	22	23	24
L1	160	176	192	208	224	240	256	272	288	304	320	336	352	368	384	400	416	432	448	464	480	496	512
L2	80	96	112	128	144	160	176	192	208	224	240	256	272	288	304	320	336	352	368	384	400	416	432
L3	198	210.5	223	248	260.5	273	285.5	310.5	323	335.5	348	373	385.5	398	423	435.5	448	460.5	485.5	498	510.5	535.5	548
L4	187.5	200	212.5	237.5	250	262.5	275	300	312.5	325	337.5	362.5	375	387.5	412.5	425	437.5	450	475	487.5	500	525	537.5
L5	21.5	19.5	18	22.5	20.5	19	17	21.5	20	18	16.5	21	19	17.5	22	20	18.5	16.5	21	19.5	17.5	22	20.5

Dimensions: SY7000 Series

Plug-in
Connector Connecting Base

Type 10/Side Ported
Terminal Block Box

SS5Y7-10TC-Stations U/D/B □-C6, C8, C10, C12 N7, N9, N11 (D)

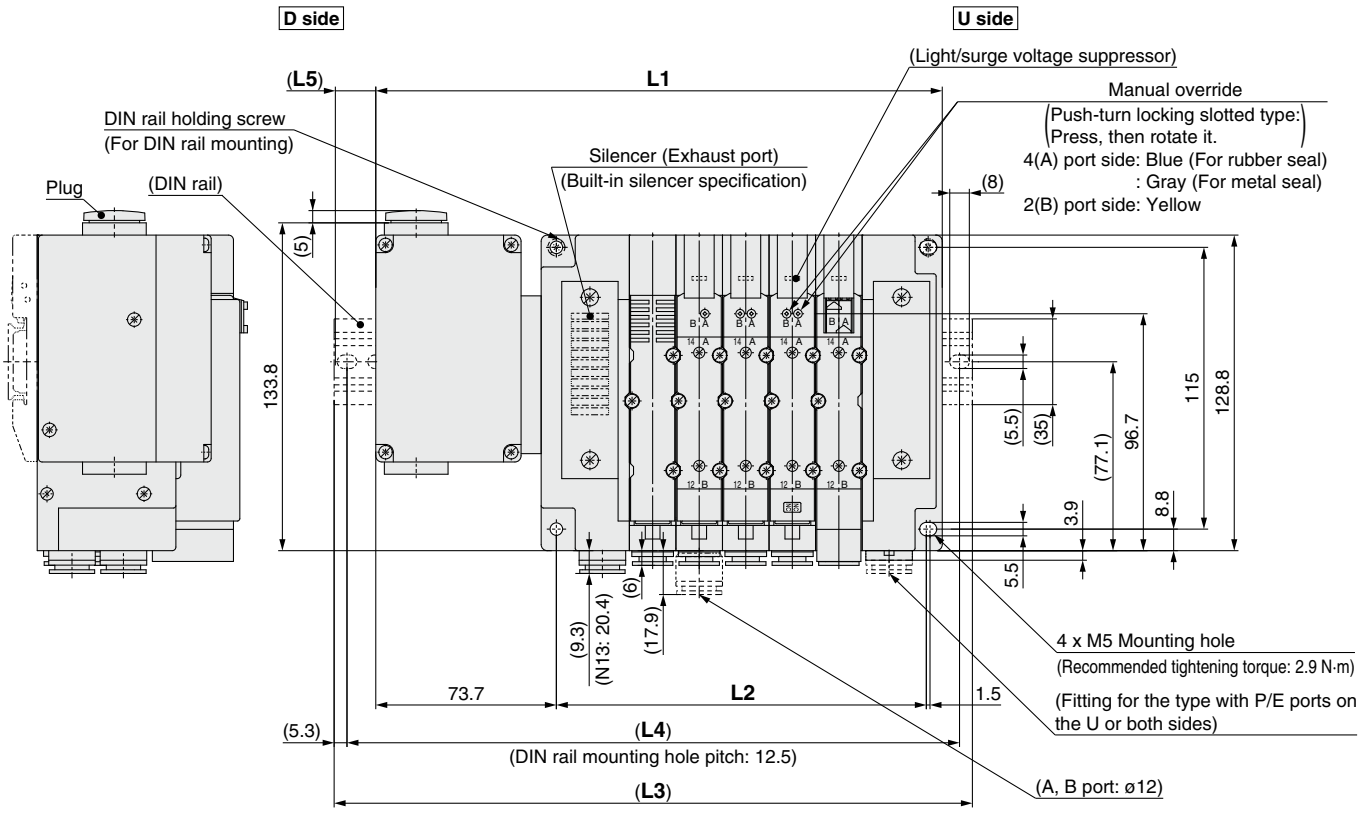

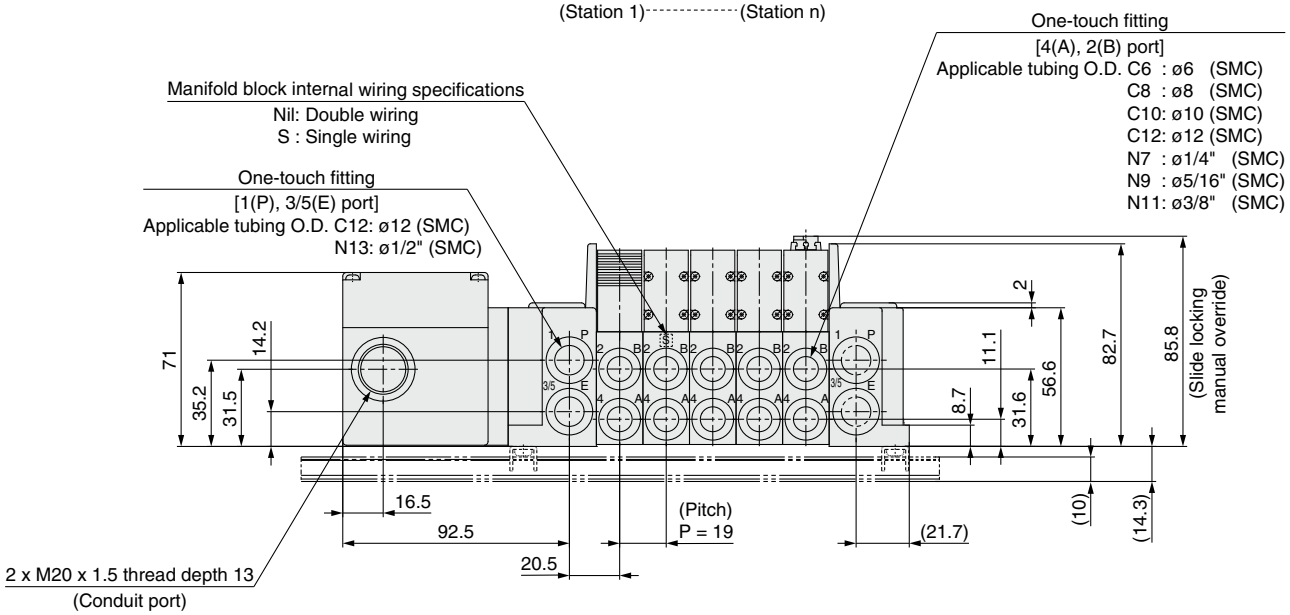

n: Stations	2	3	4	5	6	7	8	9	10	11	12	13	14	15	16	17	18	19	20	21	22	23	24
L1	174.2	193.2	212.2	231.2	250.2	269.2	288.2	307.2	326.2	345.2	364.2	383.2	402.2	421.2	440.2	459.2	478.2	497.2	516.2	535.2	554.2	573.2	592.2
L2	94	113	132	151	170	189	208	227	246	265	284	303	322	341	360	379	398	417	436	455	474	493	512
L3	210.5	223	248	260.5	285.5	298	323	335.5	360.5	373	398	423	435.5	460.5	473	498	510.5	535.5	548	573	585.5	610.5	623
L4	200	212.5	237.5	250	275	287.5	312.5	325	350	362.5	387.5	412.5	425	450	462.5	487.5	500	525	537.5	562.5	575	600	612.5
L5	20.5	17	20	17	20	16.5	19.5	16.5	19.5	16	19	22	19	22	18.5	21.5	18.5	21.5	18	21	18	21	17.5

Plug-in Connector Connecting Base

Terminal Block Box (Spring Type)

Type 12
Top Ported

SY3000/5000/7000 Series

How to Order Manifolds

Refer to pages 162 to 164 for the dimensions of Type 12/Top-ported type.

SS5Y 3 – 12 TC – 05 D □ – □ □
❶ ❷ ❸ ❹ ❺ ❻ ❼

❶ Series

3	SY3000
5	SY5000
7	SY7000

❷ Type

12	Top ported

❸ Valve stations

TC: Spring type terminal block box

Symbol	Stations	Note
02	2 stations	Double wiring ∗1
⋮	⋮	
16	16 stations	
02	2 stations	Specified layout ∗2 (Up to 32 solenoids available)
⋮	⋮	
24	24 stations	

∗1 Double wiring: 2-position single, double, 3-position, and 4-position valves can be used on all manifold stations.
Use of a 2-position single solenoid will result in an unused control signal. If this is not desired, order with a specified layout.

∗2 Specified layout: Indicate the wiring specifications with the manifold specification sheet. (Note that 2-position double, 3-position, and 4-position valves cannot be used where single wiring has been specified.)

∗ This also includes the number of the blanking plate assembly.

❹ P, E port entry

U	U side (2 to 10 stations)
D	D side (2 to 10 stations)
B	Both sides (2 to 24 stations)

❺ SUP/EXH block assembly

Nil	Internal pilot
S	Internal pilot, Built-in silencer
R	External pilot

∗ The P and E ports are only available on the U and D sides for the built-in silencer type. 3/5(E) port is plugged. The silencer exhaust port is located on the opposite side of the P and E port entry. (Example: When the P and E port entry is on the D side, the silencer exhaust port is on the U side.)

∗ When the built-in silencer type is used, keep the exhaust port from coming into direct contact with water or other liquids.

❻ P, E port size (One-touch fittings)

Symbol	SY3000	SY5000	SY7000
Nil	ø8	ø10	ø12
N	ø5/16"	ø3/8"	ø1/2"

∗ For N, sizes are in inches.

❼ Mounting

Nil	Direct mounting	
D	DIN rail mounting (with DIN rail)	
D0	DIN rail mounting (without DIN rail)	
D3	For 3 stations	Specify a length longer than that of the standard rail.
⋮	⋮	
D24	For 24 stations	

∗ Refer to page 295 (SY3000/5000/7000 series: Specific product precautions 6) for instructions on fastening the DIN rail mounting type manifold.

How to Order Manifold Assembly

Example (SS5Y3-12TC-□)

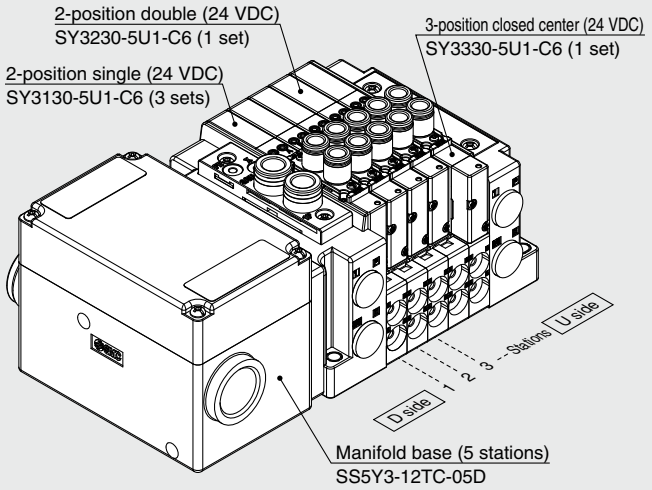

SS5Y3-12TC-05D ····· 1 set (Type 12 5-station manifold base part no.)
∗ SY3130-5U1-C6 ·····3 sets (2-position single part no.)
∗ SY3230-5U1-C6 ·····1 set (2-position double part no.)
∗ SY3330-5U1-C6 ·····1 set (3-position closed center part no.)
→The asterisk denotes the symbol for the assembly. Prefix it to the part numbers of the valve, etc.

- For the valve arrangement, the valve closest to the D side is considered the 1st station.
- Under the manifold part number, state the valves to be mounted in order starting with the 1st station as shown in the figure above. If the arrangement becomes too complicated, specify the details on a manifold specification sheet.

How to Order Valves (With mounting screw)

Refer to page 15 for valve specifications.

SY [3] [1] [3] [0] [ ] [ ] [ ] [ ] – [5] [ ] [ ] 1 – [C6] [ ] – [ ]

❶ ❷ ❸ ❹ ❺ ❻ ❼ ❽ ❾ ❿ ⓫ ⓬ ⓭

● Top ported

❶ Series

3	SY3000
5	SY5000
7	SY7000

❷ Type of actuation

1	2-position	Single
2		Double
3	3-position	Closed center
4		Exhaust center
5		Pressure center
A∗1	4-position dual 3-port	N.C./N.C.
B∗1		N.O./N.O.
C∗1		N.C./N.O.

∗1 Only the rubber seal type is available for the 4-position dual 3-port valve.

❸ Seal type

0	Rubber seal
1	Metal seal

❹ Pilot type

Nil	Internal pilot
R	External pilot

❺ Back pressure check valve (Built-in valve type)

Nil	None
H	Built-in

∗ Only the rubber seal type is available. A manifold installed type is available if a back pressure check valve with a metal seal is required. Refer to page 212 for ordering examples. However, it is not recommended to use the built-in valve type and the manifold installed type at the same time because it will reduce the flow.

∗ The built-in valve type back pressure check valve is not available for the 3-position type or the SY7000.

❻ Pilot valve option

Nil	Standard (0.7 MPa)
B	Quick response type (0.7 MPa)
K∗1	High pressure type (1.0 MPa)

∗1 Only the metal seal type is available for the high pressure type.

❼ Coil type

Nil	Standard
T	With power saving circuit (Continuous duty type)

∗ Be sure to select the power saving circuit type if the valve is to be continuously energized for long periods of time.

∗ Be careful of the energizing time when the power saving circuit is selected. Refer to page 292 for details.

❽ Rated voltage

5	24 VDC
6	12 VDC

❾ Light/surge voltage suppressor and common specification

Symbol	With light	Surge voltage suppressor	Common specification
Nil	—	—	Non-polar
R	—	●	
U	●		
S	—		Positive common
Z	●		
NS	—		Negative common
NZ	●		

∗ For the non-polar type, be careful of surge voltage intrusion. Refer to page 293 for details.

∗ Only "Z" and "NZ" types are available with a power saving circuit.

❿ Manual override

Nil: Non-locking push type

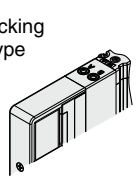

D: Push-turn locking slotted type

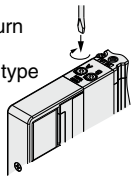

E: Push-turn locking lever type

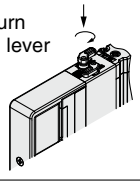

F: Slide locking type

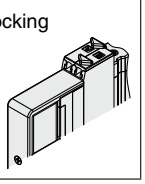

∗ Refer to page 34 for the safety slide locking manual override.

⓫ A, B port size

Thread piping

Symbol	Port size	Applicable series
M5	M5 x 0.8	SY3000
01	1/8	SY5000
02	1/4	SY7000

One-touch fitting (Metric)

Symbol	A, B port	SY3000	SY5000	SY7000
C2	ø2	●	—	—
C3	ø3.2	●	—	—
C4	ø4	●	●	—
C6	ø6	●	●	●
C8	ø8	—	●	●
C10	ø10	—	—	●
C12	ø12	—	—	●

One-touch fitting (Inch)

Symbol	A, B port	SY3000	SY5000	SY7000
N1	ø1/8"	●	—	—
N3	ø5/32"	●	●	—
N7	ø1/4"	●	●	●
N9	ø5/16"	—	●	●
N11	ø3/8"	—	—	●

⓬ Thread type

Nil	Rc
F	G
N	NPT
T	NPTF

∗ Only Nil is available for M5.

⓭ Type of mounting screw

Nil	Round head combination screw
B	Hexagon socket head cap screw
K	Round head combination screw (Drop prevention type)
H	Hexagon socket head cap screw (Drop prevention type)

∗ For "K" and "H," the valve body cover has a drop prevention construction to stop the mounting screws from falling out when the valve is removed for maintenance, etc.

∗ **When ordering a valve individually, the base gasket is not included.**
Since the base gasket is attached to the manifold, please order the base gasket separately if it is needed for maintenance. Refer to page 198 for base gasket and mounting screw part numbers.

∗ "B" and "H" cannot be selected for the individual SUP/EXH spacer assembly or interface regulator.

⚠ Protective class class Ⅲ (Mark: ⧾)

Terminal Block Connection

Step 1. Remove the terminal block cover

Loosen the 4 mounting screws (M3) to remove the terminal block cover.

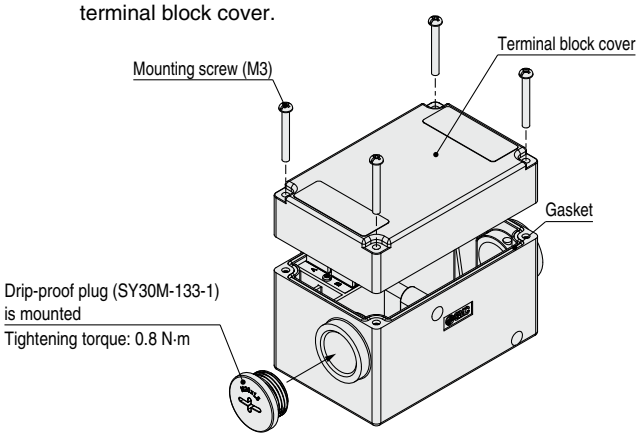

Step 2. The diagram below shows the terminal block wiring. All stations are provided with double wiring regardless of the mounted valves.

Connect each wire to the power supply side, according to the markings provided inside the terminal block.
Be sure to connect the wire with the push button pressed down.

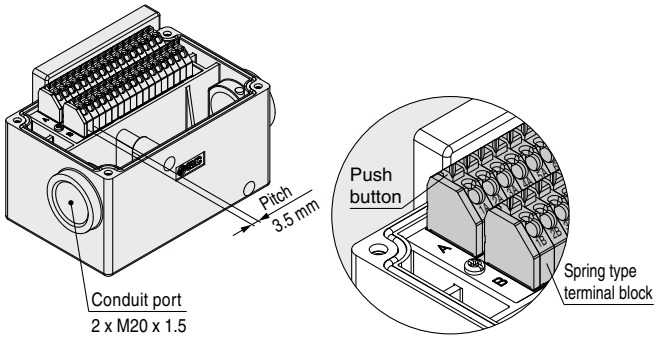

Step 3. Mount the terminal block cover

Securely tighten the mounting screws (M3) to the torque shown in the table below only after confirming that the gasket is installed correctly.

Proper tightening torque [N·m]
0.54 to 0.66

• Applicable wire range: Conductor diameter ø0.5 to ø1.2 mm, Stranded wire AWG24 to 16

Electrical Wiring Specifications (IP67 compatible)

Standard wiring

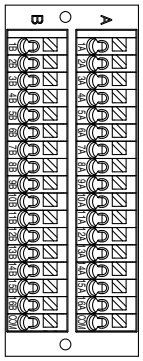

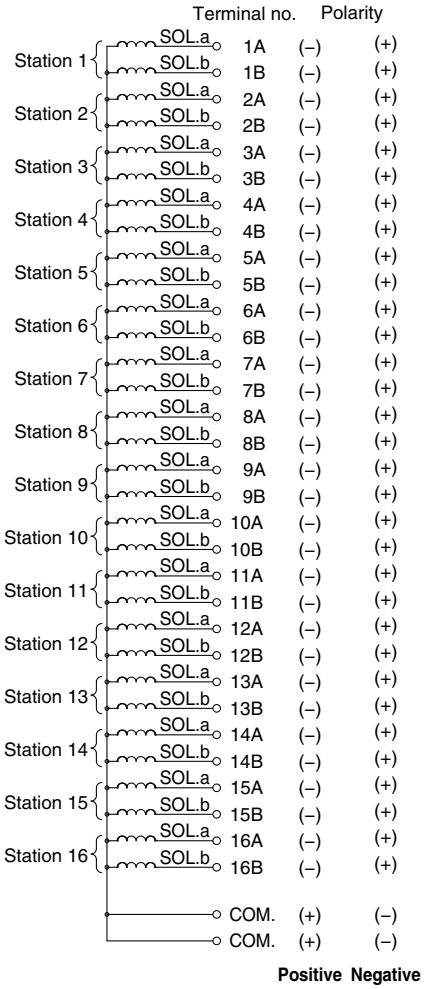

If alignment is not specified, the internal wiring will be double wiring (connected to SOL. a and SOL. b) regardless of number of stations, valve types, and option types.

* When using a valve with no polarity, either positive common or negative common can be used.

Specified Layout

A mixture of single and double wiring can be specified on the manifold specification sheet. The maximum number of stations is determined according to the number of solenoids. The total number of solenoids should be 32 or less. 1 solenoid is required for the 2-position single, and 2 solenoids for the 2-position double, 3-position, and 4-position.

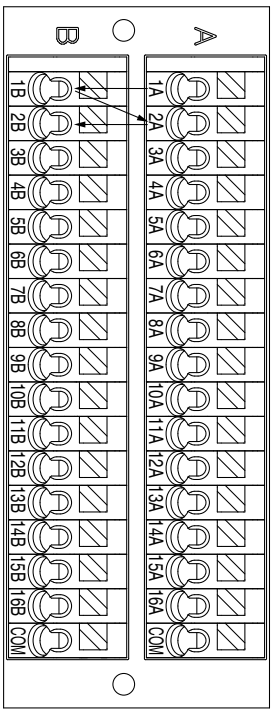

Type 10
Side Ported

Type 11
Bottom Ported

Plug-in Connector Connecting Base

Terminal Block Box

SY3000/5000/7000 Series

How to Order Manifolds

Refer to pages 160 (SY5000) and 161 (SY7000) for the dimensions of Type 11/Bottom-ported type.

SS5Y 3 – 10 T – 05 U □ – C6 □

❶ ❷ ❸ ❹ ❺ ❻ ❼

❶ Series

3	SY3000
5	SY5000
7	SY7000

❷ Type

10	Side ported
11	Bottom ported∗1

∗1 The SY5000 manifold base is used for the bottom-ported SY3000. When ordering, refer to the "Plug-in Mixed Mounting Type Manifold" (from page 165).

❸ Valve stations

Symbol	Stations	Note
02	2 stations	Double wiring∗1
⋮	⋮	
10	10 stations	
02	2 stations	Specified layout∗2 (Up to 20 solenoids available)
⋮	⋮	
20	20 stations	

∗1 Double wiring: 2-position single, double, 3-position, and 4-position valves can be used on all manifold stations. Use of a 2-position single solenoid will result in an unused control signal. If this is not desired, order with a specified layout.

∗2 Specified layout: Indicate the wiring specifications with the manifold specification sheet. (Note that 2-position double, 3-position, and 4-position valves cannot be used where single wiring has been specified.)

∗ This also includes the number of the blanking plate assembly.

❹ P, E port entry

U	U side (2 to 10 stations)
D	D side (2 to 10 stations)
B	Both sides (2 to 20 stations)

❺ SUP/EXH block assembly

Nil	Internal pilot
S	Internal pilot, Built-in silencer
R	External pilot

∗ 3/5(E) port is plugged for the built-in silencer type.

∗ When the built-in silencer type is used, keep the exhaust port from coming into direct contact with water or other liquids.

Refer to the page on the right for ❻.

❼ Mounting and Option

Symbol	Mounting	Option	
		Name plate	Station number
Nil	Direct mounting	—	—
AA		●	●
BA		●	—
D□	DIN rail mounting	—	—
A□		●	●
B□		●	—

∗ Enter the number of stations inside □ when it is larger than the number of valve stations. (Refer to "DIN Rail Option" below.)

∗ Only direct mounting is available for the type 11 bottom-ported type.

∗ Refer to page 295 for the fixation of DIN rail mounting type manifold.

DIN Rail Option

Nil	Standard length	
0	Without DIN rail (with bracket)	
3	For 3 stations	Specify a longer rail than the total length of specified stations.
⋮	⋮	
20	For 20 stations	

How to Order Manifold Assembly

Example (SS5Y3-10T-□)

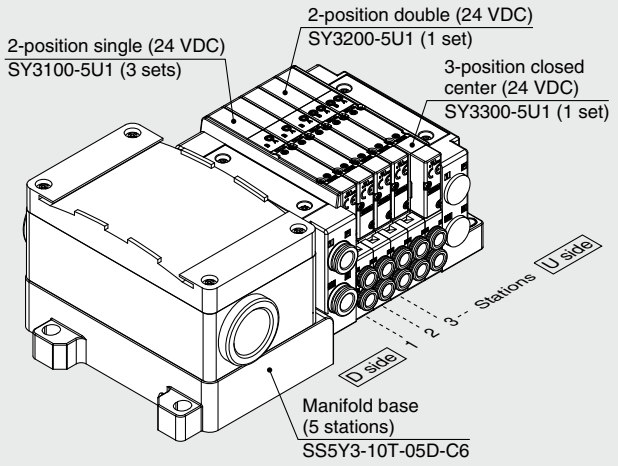

SS5Y3-10T-05D-C6 ··· 1 set (Type 10 5-station manifold base part no.)
∗SY3100-5U1 ····· 3 sets (2-position single part no.)
∗SY3200-5U1 ····· 1 set (2-position double part no.)
∗SY3300-5U1 ····· 1 set (3-position closed center part no.)
→ The asterisk denotes the symbol for the assembly. Prefix it to the part numbers of the valve, etc.

- For the valve arrangement, the valve closest to the D side is considered the 1st station.
- Under the manifold part number, state the valves to be mounted in order starting with the 1st station as shown in the figure above. If the arrangement becomes too complicated, specify the details on a manifold specification sheet.

∗ When mixing top-ported configurations, select from those listed on page 74. In such cases, use caution as there is also output on the A and B ports on the base side. Specify on the manifold specification sheet if plugs are required for the A and B ports on the base side.

❻ A, B port size (Metric/One-touch fitting)

Symbol	A, B port		Type 10/Side ported			Type 11/Bottom ported	
			SY3000	SY5000	SY7000	SY5000	SY7000
C2	Straight	ø2	●	—	—	—	—
C3		ø3.2	●	—	—	—	—
C4		ø4	●	●	—	●	—
C6		ø6	●	●	●	●	●
C8		ø8	—	●	●	●	●
C10		ø10	—	—	●	—	●
C12		ø12	—	—	●	—	●
CM*1		Straight port, mixed sizes	●	●	●	●	●
L4	Elbow*2 Upward	ø4	●	●	—	—	—
L6		ø6	●	●	●	—	—
L8		ø8	—	●	●	—	—
L10		ø10	—	—	●	—	—
L12		ø12	—	—	●	—	—
B4	Elbow*2 Downward	ø4	●	●	—	—	—
B6		ø6	●	●	●	—	—
B8		ø8	—	●	●	—	—
B10		ø10	—	—	●	—	—
B12		ø12	—	—	●	—	—
LM*1		Elbow port, mixed sizes (Including upward and downward piping)	●	●	●	—	—
P, E port size (One-touch fittings)			ø8	ø10	ø12	ø10	ø12

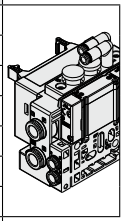
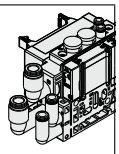
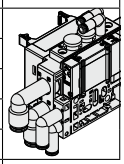

A, B port size (Inch/One-touch fitting)

Symbol	A, B port		Type 10/Side ported			Type 11/Bottom ported	
			SY3000	SY5000	SY7000	SY5000	SY7000
N1	Straight	ø1/8"	●	—	—	—	—
N3		ø5/32"	●	●	—	●	—
N7		ø1/4"	●	●	●	●	●
N9		ø5/16"	—	●	●	●	●
N11		ø3/8"	—	—	●	—	●
CM*1		Straight port, mixed sizes	●	●	●	●	●
LN3	Elbow*2 Upward	ø5/32"	●	—	—	—	—
LN7		ø1/4"	●	●	—	—	—
LN9		ø5/16"	—	●	—	—	—
LN11		ø3/8"	—	—	●	—	—
BN3	Elbow*2 Downward	ø5/32"	●	—	—	—	—
BN7		ø1/4"	●	●	—	—	—
BN9		ø5/16"	—	●	—	—	—
BN11		ø3/8"	—	—	●	—	—
LM*1		Elbow port, mixed sizes (Including upward and downward piping)	●	●	●	—	—
P, E port size (One-touch fittings)			ø5/16"	ø3/8"	ø1/2"	ø3/8"	ø1/2"

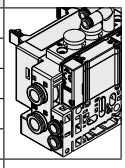
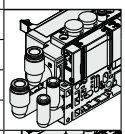
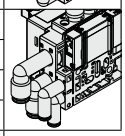

*1 Indicate the sizes on the manifold specification sheet in the case of “CM” or “LM.”
The direction of P, E port fittings is the same as for the A, B port. If selecting “LM,” indicate it on the manifold specification sheet for the P, E port fitting direction.

*2 To avoid interference with the body or piping, select a downward elbow port when mounting the optional spacer assembly (pages 204 to 206).

Protective class class Ⅲ (Mark: ⧫)

How to Order Valves (With mounting screw)

Refer to page 15 for valve specifications.

SY 3 1 0 0 □ □ □ □ – 5 □ □ 1 – □

❶ ❷ ❸ ❹ ❺ ❻ ❼ ❽ ❾ ❿ ⓫

❸ Base mounted

❶ Series

3	SY3000
5	SY5000
7	SY7000

❷ Type of actuation

1	2-position	Single
2		Double
3	3-position	Closed center
4		Exhaust center
5		Pressure center
A*1	4-position dual 3-port	N.C./N.C.
B*1		N.O./N.O.
C*1		N.C./N.O.

*1 Only the rubber seal type is available for the 4-position dual 3-port valve.

❸ Seal type

0	Rubber seal
1	Metal seal

❹ Pilot type

Nil	Internal pilot
R	External pilot

❺ Back pressure check valve (Built-in valve type)

Nil	None
H	Built-in

* Only the rubber seal type is available. A manifold installed type is available if a back pressure check valve with a metal seal is required. Refer to page 212 for ordering examples. However, it is not recommended to use the built-in valve type and the manifold installed type at the same time because it will reduce the flow.
* The built-in valve type back pressure check valve is not available for the 3-position type or the SY7000.

❻ Pilot valve option

Nil	Standard (0.7 MPa)
B	Quick response type (0.7 MPa)
K*1	High pressure type (1.0 MPa)

*1 Only the metal seal type is available for the high pressure type.

❼ Coil type

Nil	Standard
T	With power saving circuit (Continuous duty type)

* Be sure to select the power saving circuit type if the valve is to be continuously energized for long periods of time.
* Be careful of the energizing time when the power saving circuit is selected. Refer to page 292 for details.

❽ Rated voltage

5	24 VDC
6	12 VDC

❾ Light/surge voltage suppressor and common specification

Symbol	With light	Surge voltage suppressor	Common specification
Nil	—	—	Non-polar
R	—	●	
U	●		
S	—		Positive common
Z	●		
NS	—		Negative common
NZ	●		

* For the non-polar type, be careful of surge voltage intrusion. Refer to page 293 for details.
* Only "Z" and "NZ" types are available with a power saving circuit.

❿ Manual override

Nil: Non-locking push type

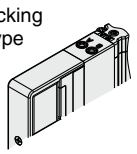

D: Push-turn locking slotted type

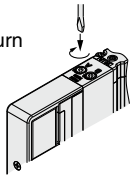

E: Push-turn locking lever type

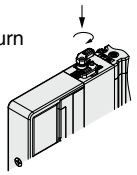

F: Slide locking type

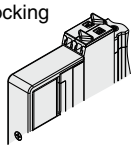

* Refer to page 34 for the safety slide locking manual override.

⓫ Type of mounting screw

Nil	Round head combination screw
B	Hexagon socket head cap screw
K	Round head combination screw (Falling-out-prevention type)
H	Hexagon socket head cap screw (Falling-out-prevention type)

* For "K" and "H," the valve body cover has a drop prevention construction to stop the mounting screws from falling out when the valve is removed for maintenance, etc.
* **When ordering a valve individually, the base gasket is not included.**
  Since the base gasket is attached to the manifold, please order the base gasket separately if it is needed for maintenance. Refer to page 198 for base gasket and mounting screw part numbers.
* "B" and "H" cannot be selected for the individual SUP/EXH spacer assembly, interface regulator, or double check spacer assembly with residual pressure release valve.

⚠ Protective class class Ⅲ (Mark: Ⅲ)

Dimensions: SY3000 Series

SS5Y3-10T- Stations **U / D / B** - **C2 / C3, N1 / C4, N3 / C6, N7** **(D)**

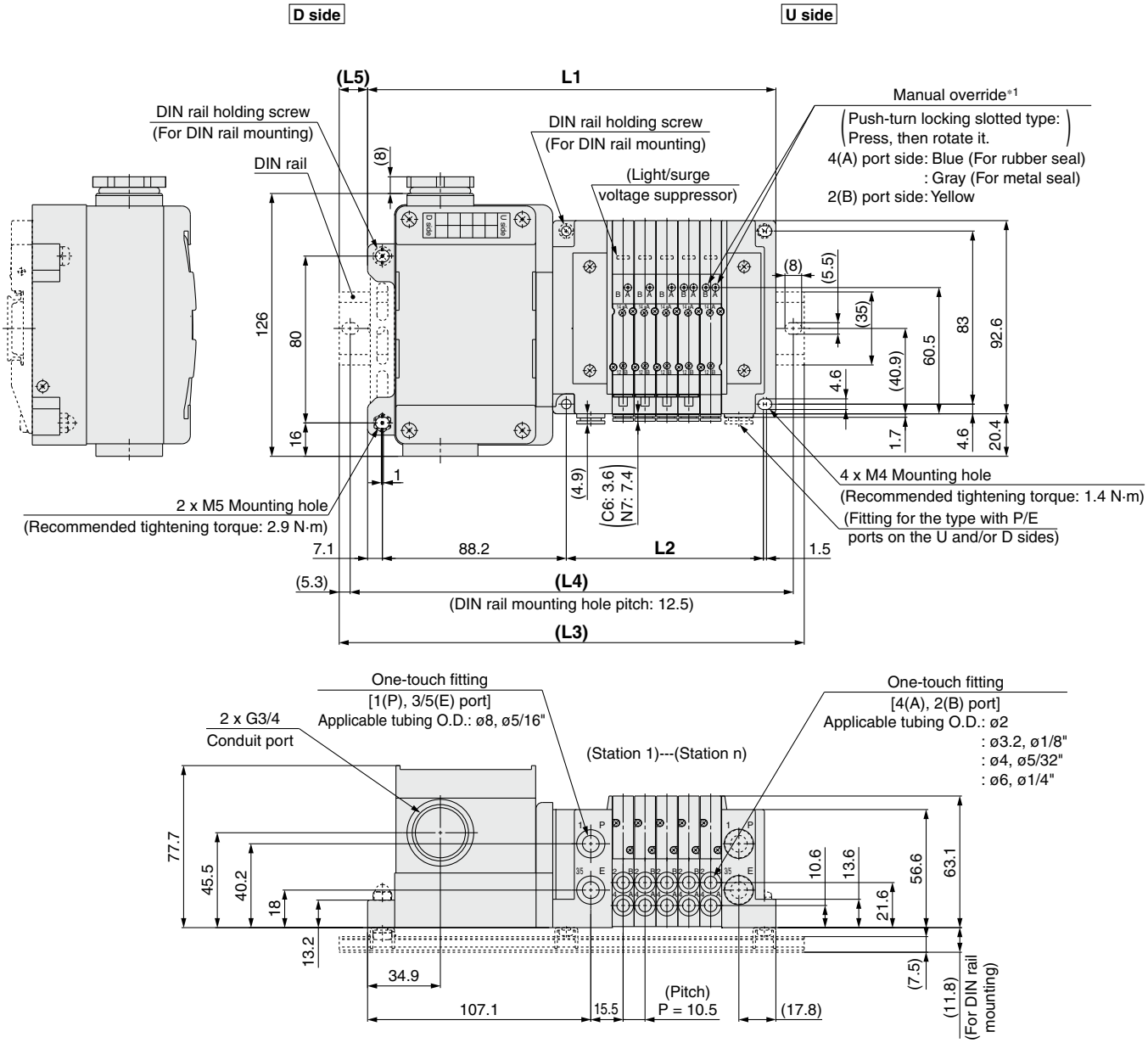

*1 Refer to page 157 for dimensions of the external pilot, silencer, elbow fittings, and slide locking manual override.
* These figures show the "SS5Y3-10T-05D-C6."
* Refer to page 162 for dimensions of A or B port top-ported type.

n: Stations	2	3	4	5	6	7	8	9	10	11	12	13	14	15	16	17	18	19	20
L1	164.3	174.8	185.3	195.8	206.3	216.8	227.3	237.8	248.3	258.8	269.3	279.8	290.3	300.8	311.3	321.8	332.3	342.8	353.3
L2	63	73.5	84	94.5	105	115.5	126	136.5	147	157.5	168	178.5	189	199.5	210	220.5	231	241.5	252
L3	198	198	210.5	223	235.5	248	260.5	273	273	285.5	298	310.5	323	335.5	335.5	348	360.5	373	385.5
L4	187.5	187.5	200	212.5	225	237.5	250	262.5	262.5	275	287.5	300	312.5	325	325	337.5	350	362.5	375
L5	17	11.5	12.5	13.5	14.5	15.5	16.5	17.5	12.5	13.5	14.5	15.5	16.5	17.5	12	13	14	15	16

Dimensions: SY5000 Series

Plug-in Connector Connecting Base | Type 10/Side Ported | Terminal Block Box

SS5Y5-10T- Stations **U** C4, N3 **D-** C6, N7 **B** C8, N9 **(D)**

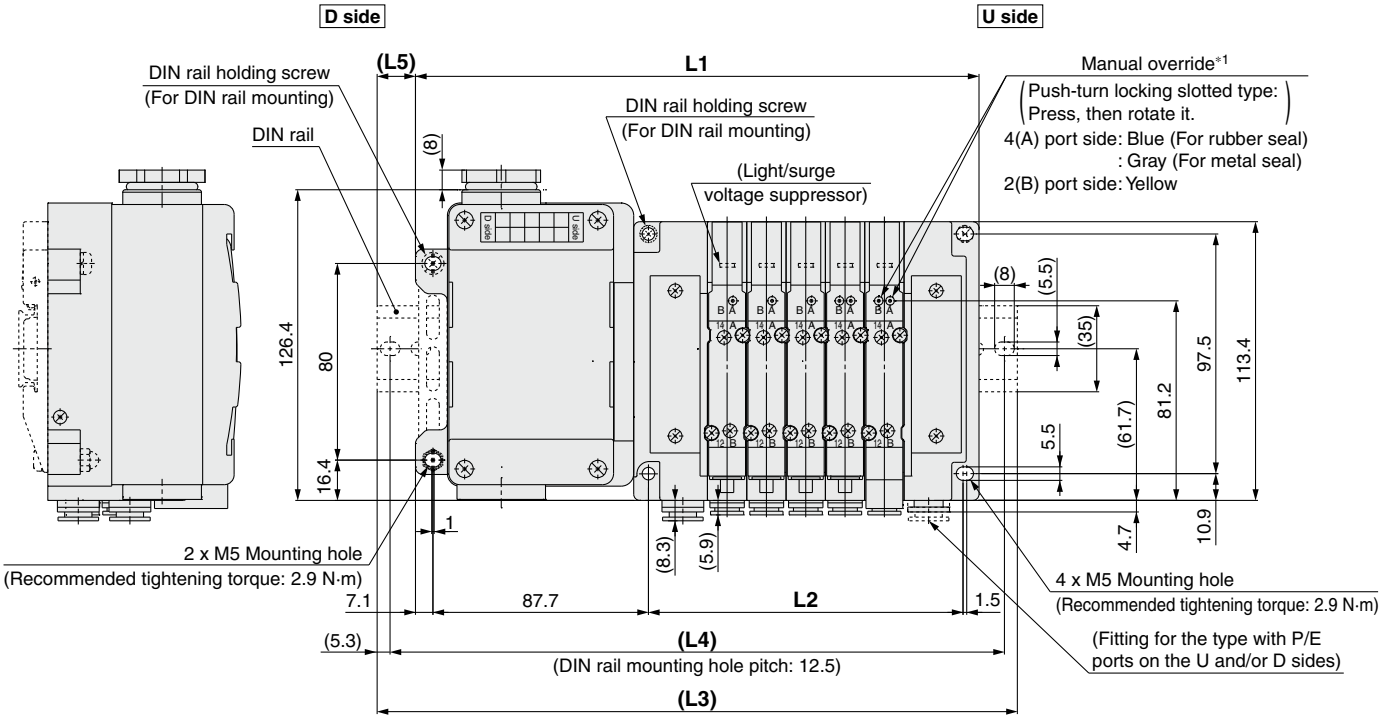

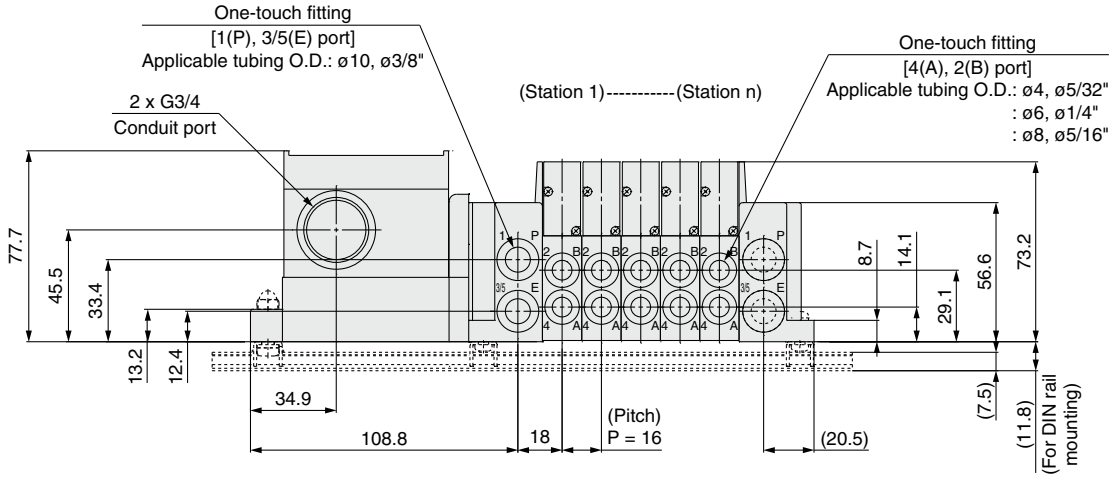

*1 Refer to page 158 for dimensions of the external pilot, silencer, elbow fittings, and slide locking manual override.
* These figures show the "SS5Y5-10T-05D-C8."
* Refer to page 163 for dimensions of A or B port top-ported type.

n: Stations	2	3	4	5	6	7	8	9	10	11	12	13	14	15	16	17	18	19	20
L1	181.3	197.3	213.3	229.3	245.3	261.3	277.3	293.3	309.3	325.3	341.3	357.3	373.3	389.3	405.3	421.3	437.3	453.3	469.3
L2	80	96	112	128	144	160	176	192	208	224	240	256	272	288	304	320	336	352	368
L3	210.5	223	248	260.5	273	285.5	310.5	323	335.5	360.5	373	385.5	398	423	435.5	448	460.5	485.5	498
L4	200	212.5	237.5	250	262.5	275	300	312.5	325	350	362.5	375	387.5	412.5	425	437.5	450	475	487.5
L5	14.5	13	17.5	15.5	14	12	16.5	15	13	17.5	16	14	12.5	17	15	13.5	11.5	16	14.5

Plug-in Connector Connecting Base | Type 10/Side Ported | Terminal Block Box

Dimensions: SY7000 Series

SS5Y7-10T- Stations **U / D / B -** C6, N7 / C8, N9 / C10, N11 / C12 **(D)**

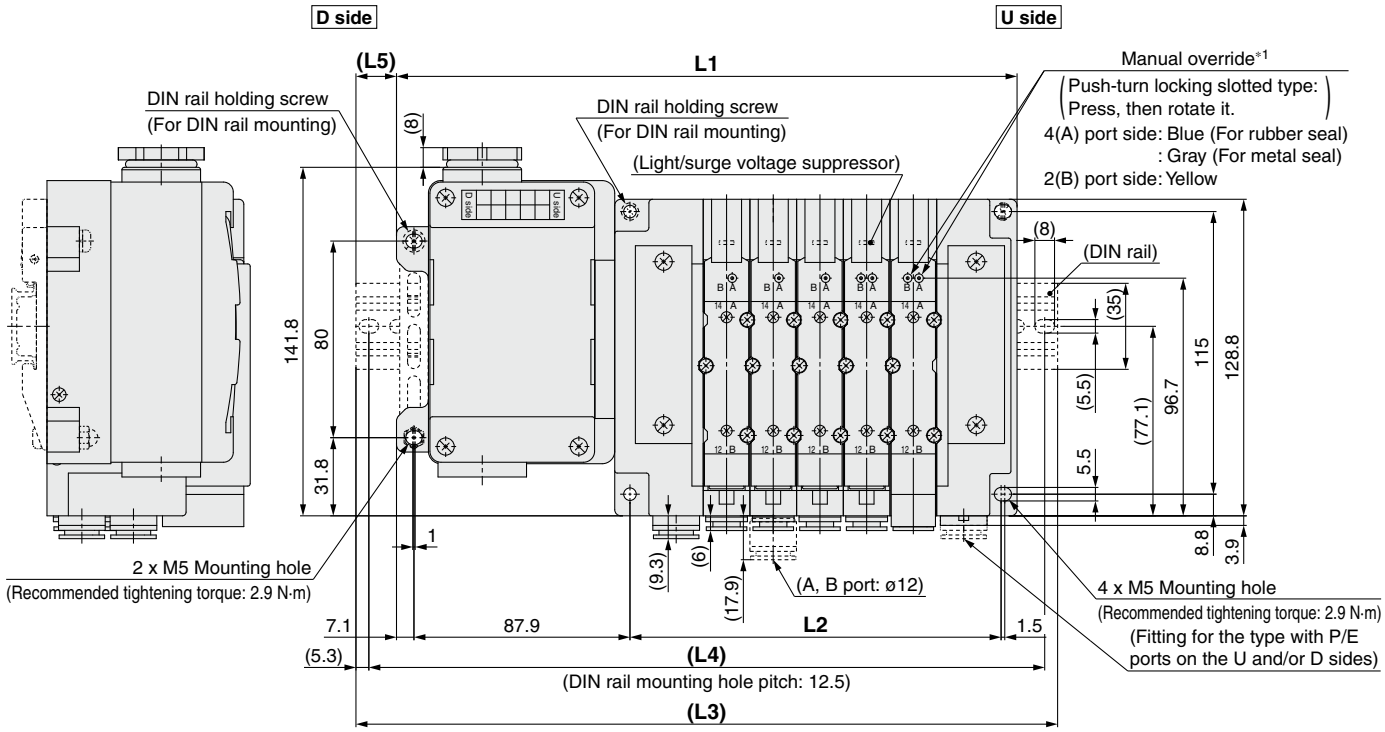

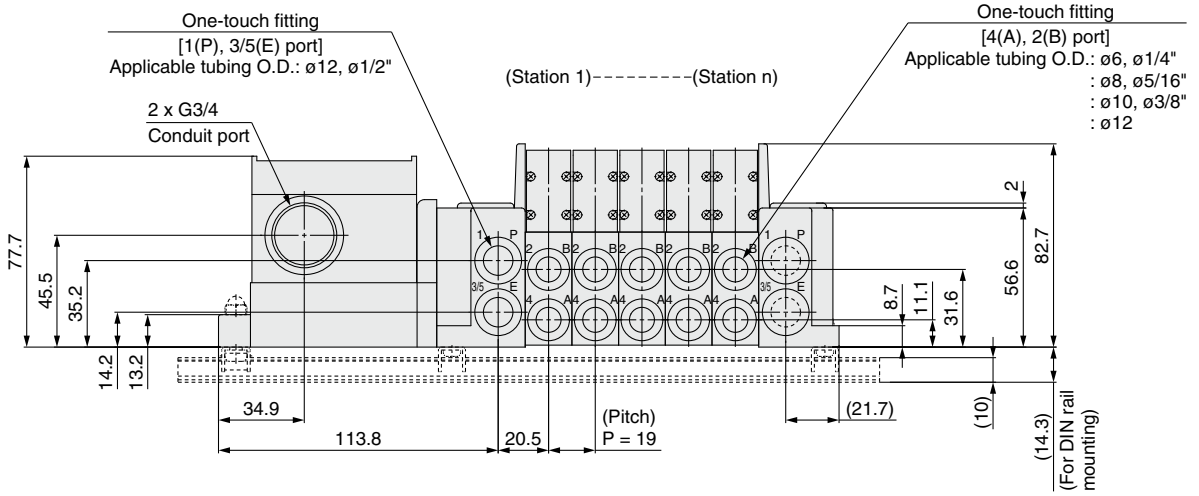

*1 Refer to page 159 for dimensions of the external pilot, silencer, elbow fittings, and slide locking manual override.
* These figures show the "SS5Y7-10T-05D-C10."
* Refer to page 164 for dimensions of A or B port top-ported type.

n: Stations	2	3	4	5	6	7	8	9	10	11	12	13	14	15	16	17	18	19	20
L1	195.5	214.5	233.5	252.5	271.5	290.5	309.5	328.5	347.5	366.5	385.5	404.5	423.5	442.5	461.5	480.5	499.5	518.5	537.5
L2	94	113	132	151	170	189	208	227	246	265	284	303	322	341	360	379	398	417	436
L3	223	248	260.5	285.5	298	323	335.5	360.5	373	398	410.5	435.5	448	473	485.5	510.5	523	548	573
L4	212.5	237.5	250	275	287.5	312.5	325	350	362.5	387.5	400	425	437.5	462.5	475	500	512.5	537.5	562.5
L5	14	17	13.5	16.5	13.5	16.5	13	16	13	16	12.5	15.5	12.5	15.5	12	15	12	15	18

Plug-in Connector Connecting Base

Terminal Block Box

Type 12
Top Ported

SY3000/5000/7000 Series

How to Order Manifolds

Refer to pages 162 to 164 for the dimensions of Type 12/Top-ported type.

SS5Y 3 – 12T – 05 U □ – □ □

❶ ❷ ❸ ❹ ❺ ❻

❶ Series

3	SY3000
5	SY5000
7	SY7000

❷ Valve stations

Symbol	Stations	Note
02	2 stations	Double wiring*1
⋮	⋮	
10	10 stations	
02	2 stations	Specified layout*2 (Up to 20 solenoids available)
⋮	⋮	
20	20 stations	

*1 Double wiring: 2-position single, double, 3-position, and 4-position valves can be used on all manifold stations.
Use of a 2-position single solenoid will result in an unused control signal. If this is not desired, order with a specified layout.

*2 Specified layout: Indicate the wiring specifications on the manifold specification sheet. (Note that 2-position double, 3-position, and 4-position valves cannot be used where single wiring has been specified.)

* This also includes the number of the blanking plate assembly.

❸ P, E port entry

U*1	U side (2 to 10 stations)
D*1	D side (2 to 10 stations)
B	Both sides (2 to 20 stations)

*1 ❹ For type "S", SUP/EXH block assembly with a built-in silencer, choose U or D for P, E port entry.

❹ SUP/EXH block assembly

Nil	Internal pilot
S	Internal pilot, Built-in silencer
R	External pilot

* The P and E ports are only available on the U and D sides for the built-in silencer type. 3/5(E) port is plugged. The silencer exhaust port is located on the opposite side of the P and E port entry. (Example: When the P and E port entry is on the D side, the silencer exhaust port is on the U side.)
* When the built-in silencer type is used, keep the exhaust port from coming into direct contact with water or other liquids.

❺ P, E port size (One-touch fittings)

Symbol	SY3000	SY5000	SY7000
Nil	ø8	ø10	ø12
N	ø5/16"	ø3/8"	ø1/2"

* For N, sizes are in inches.

❻ Mounting

Nil	Direct mounting	
D	DIN rail mounting (With DIN rail)	
D0	DIN rail mounting (Without DIN rail)	
D3	For 3 stations	Specify a length longer than that of the standard rail.
⋮	⋮	
D20	For 20 stations	

* Refer to page 295 for the fixation of DIN rail mounting type manifold.

How to Order Manifold Assembly

Example (SS5Y3-12T-□)

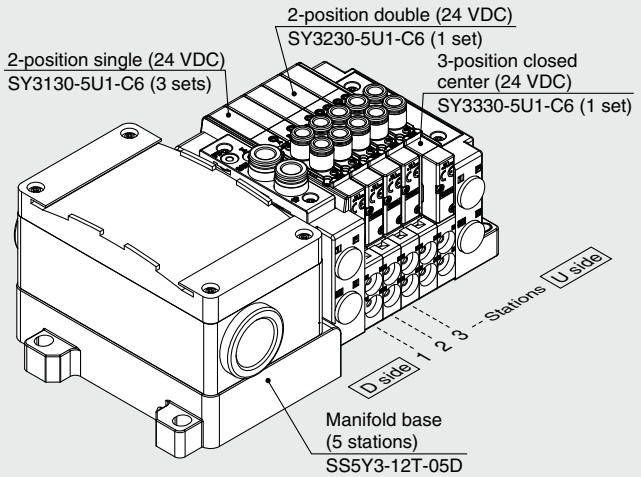

SS5Y3-12T-05D ····· 1 set (Type 12 5-station manifold base part no.)
***SY3130-5U1-C6 ····· 3 sets (2-position single part no.)**
***SY3230-5U1-C6 ····· 1 set (2-position double part no.)**
***SY3330-5U1-C6 ····· 1 set (3-position closed center part no.)**
→ The asterisk denotes the symbol for the assembly. Prefix it to the part numbers of the valve, etc.

- For the valve arrangement, the valve closest to the D side is considered the 1st station.
- Under the manifold part number, state the valves to be mounted in order starting with the 1st station as shown in the figure above. If the arrangement becomes too complicated, specify the details on a manifold specification sheet.

How to Order Valves (With mounting screw)

Refer to page 15 for valve specifications.

SY 3 1 3 0 □ □ □ □ – 5 □ □ 1 – C6 □ – □

❶ ❷ ❸ ❹ ❺ ❻ ❼ ❽ ❾ ❿ ⓫ ⓬ ⓭

❸: Top ported

❶ Series

3	SY3000
5	SY5000
7	SY7000

❷ Type of actuation

1	2-position	Single
2		Double
3	3-position	Closed center
4		Exhaust center
5		Pressure center
A*1	4-position dual 3-port	N.C./N.C.
B*1		N.O./N.O.
C*1		N.C./N.O.

*1 Only the rubber seal type is available for the 4-position dual 3-port valve.

❸ Seal type

0	Rubber seal
1	Metal seal

❹ Pilot type

Nil	Internal pilot
R	External pilot

❺ Back pressure check valve (Built-in valve type)

Nil	None
H	Built-in

* Only the rubber seal type is available. A manifold installed type is available if a back pressure check valve with a metal seal is required. Refer to page 212 for ordering examples. However, it is not recommended to use the built-in valve type and the manifold installed type at the same time because it will reduce the flow.
* The built-in valve type back pressure check valve is not available for the 3-position type or the SY7000.

❻ Pilot valve option

Nil	Standard (0.7 MPa)
B	Quick response type (0.7 MPa)
K*1	High pressure type (1.0 MPa)

*1 Only the metal seal type is available for the high pressure type.

❼ Coil type

Nil	Standard
T	With power saving circuit (Continuous duty type)

* Be sure to select the power saving circuit type if the valve is to be continuously energized for long periods of time.
* Be careful of the energizing time when the power saving circuit is selected. Refer to page 292 for details.

❽ Rated voltage

5	24 VDC
6	12 VDC

❾ Light/surge voltage suppressor and common specification

Symbol	With light	Surge voltage suppressor	Common specification
Nil	—	—	Non-polar
R	—	●	
U	●		
S	—		Positive common
Z	●		
NS	—		Negative common
NZ	●		

* For the non-polar type, be careful of surge voltage intrusion. Refer to page 293 for details.
* Only "Z" and "NZ" types are available with a power saving circuit.

❿ Manual override

Nil: Non-locking push type

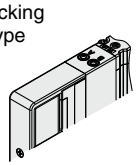

D: Push-turn locking slotted type

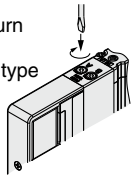

E: Push-turn locking lever type

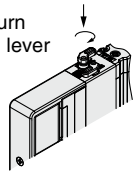

F: Slide locking type

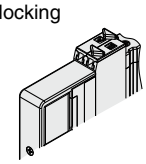

* Refer to page 34 for the safety slide locking manual override.

⓫ A, B port size

Thread piping

Symbol	Port size	Applicable series
M5	M5 x 0.8	SY3000
01	1/8	SY5000
02	1/4	SY7000

One-touch fitting (Metric)

Symbol	A, B port	SY3000	SY5000	SY7000
C2	ø2	●	—	—
C3	ø3.2	●	—	—
C4	ø4	●	●	—
C6	ø6	●	●	●
C8	ø8	—	●	●
C10	ø10	—	—	●
C12	ø12	—	—	●

One-touch fitting (Inch)

Symbol	A, B port	SY3000	SY5000	SY7000
N1	ø1/8"	●	—	—
N3	ø5/32"	●	●	—
N7	ø1/4"	●	●	●
N9	ø5/16"	—	●	●
N11	ø3/8"	—	—	●

⓬ Thread type

Nil	Rc
F	G
N	NPT
T	NPTF

* Only Nil is available for M5.

⓭ Type of mounting screw

Nil	Round head combination screw
B	Hexagon socket head cap screw
K	Round head combination screw (Drop prevention type)
H	Hexagon socket head cap screw (Drop prevention type)

* For "K" and "H," the valve body cover has a drop prevention construction to stop the mounting screws from falling out when the valve is removed for maintenance, etc.
* **When ordering a valve individually, the base gasket is not included.**
  Since the base gasket is attached to the manifold, please order the base gasket separately if it is needed for maintenance. Refer to page 198 for base gasket and mounting screw part numbers.
* "B" and "H" cannot be selected for the individual SUP/EXH spacer assembly or interface regulator.

⚠ Protective class class Ⅲ (Mark: Ⅲ)

Terminal Block Connection

Step 1. Remove the terminal block cover
Loosen the 4 mounting screws (M4) to remove the terminal block cover.

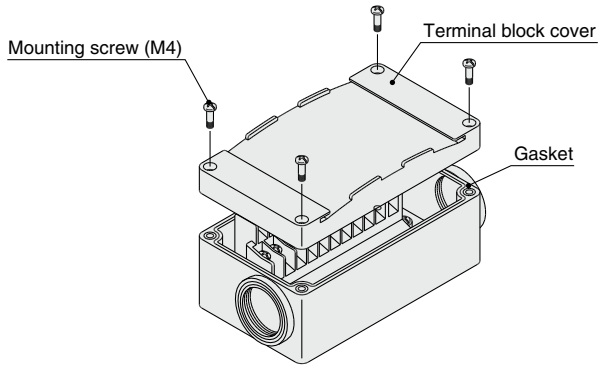

Step 2. The diagram below shows the terminal block wiring. All stations are provided with double wiring regardless of the mounted valves.
Connect each wire to the power supply side, according to the markings provided inside the terminal block.

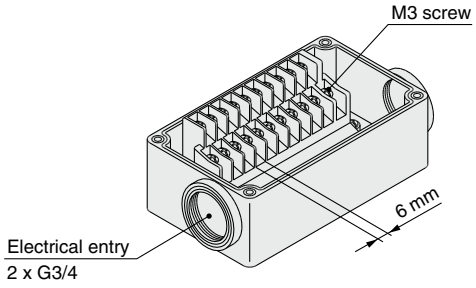

Step 3. Mount the terminal block cover
Securely tighten the screws to the torque shown in the table below only after confirming that the gasket is installed correctly.

Proper tightening torque [N·m]
0.7 to 1.2

- Applicable crimped terminal: 1.25-3S, 1.25Y-3, 1.25Y-3N, 1.25Y-3.5
- Name plate: VVQ5000-N-T
- Drip-proof plug assembly (for G3/4): AXT100-B06A

Electrical Wiring Specifications (IP67 compatible)

Standard wiring

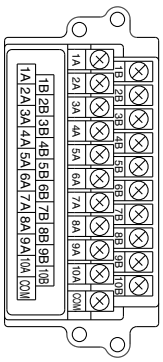

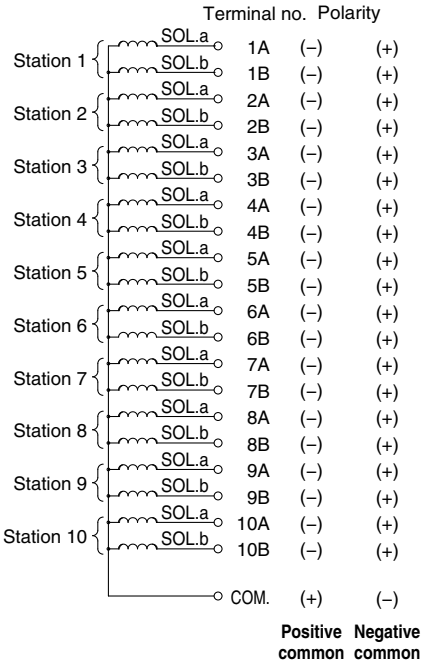

If alignment is not specified, the internal wiring will be double wiring (connected to SOL. a and SOL. b) regardless of number of stations, valve types, and option types.

* When using a valve with no polarity, either positive common or negative common can be used.

Specified Layout

A mixture of single and double wiring can be specified on the manifold specification sheet. The maximum number of stations is determined according to the number of solenoids. The total number of solenoids should be 20 or less. 1 solenoid is required for the 2-position single, and 2 solenoids for the 2-position double, 3-position, and 4-position.

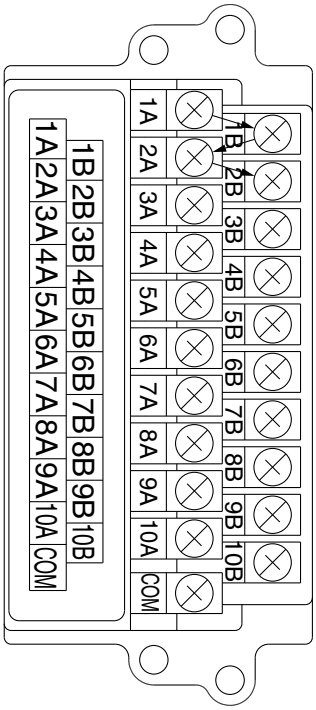

Type 10
Side Ported

Type 11
Bottom Ported

Plug-in Connector Connecting Base

Lead Wire

SY3000/5000/7000 Series

How to Order Manifolds

Refer to pages 160 (SY5000) and 161 (SY7000) for the dimensions of Type 11/Bottom-ported type.

SS5Y 3 – 10 L1 1 – 05 U □ – C6 □

❶ ❷ ❸ ❹ ❺ ❻ ❼ ❽ ❾

❶ Series

3	SY3000
5	SY5000
7	SY7000

❷ Type

10	Side ported
11	Bottom ported*1

*1 The SY5000 manifold base is used for the bottom-ported SY3000. When ordering, refer to the "Plug-in Mixed Mounting Type Manifold" (from page 165).

❸ Number of cores (Lead wire)

L1	34 cores
L2	17 cores
L3	9 cores

❹ Lead wire length

1	0.6 m
2	1.5 m
3	3 m

❺ Valve stations

(L1□)

Symbol	Stations	Note
02	2 stations	Double wiring*1
⋮	⋮	
16	16 stations	
02	2 stations	Specified layout*2 (Up to 32 solenoids available)
⋮	⋮	
24	24 stations	

(L3□)

Symbol	Stations	Note
02	2 stations	Double wiring*1
⋮	⋮	
04	4 stations	
02	2 stations	Specified layout*2 (Up to 8 solenoids available)
⋮	⋮	
08	8 stations	

(L2□)

Symbol	Stations	Note
02	2 stations	Double wiring*1
⋮	⋮	
08	8 stations	
02	2 stations	Specified layout*2 (Up to 16 solenoids available)
⋮	⋮	
16	16 stations	

*1 Double wiring: 2-position single, double, 3-position, and 4-position valves can be used on all manifold stations.
Use of a 2-position single solenoid will result in an unused control signal. If this is not desired, order with a specified layout.

*2 Specified layout: Indicate the wiring specifications on the manifold specification sheet. (Note that 2-position double, 3-position, and 4-position valves cannot be used where single wiring has been specified.)

* This also includes the number of the blanking plate assembly.

❻ P, E port entry

U	U side (2 to 10 stations)
D	D side (2 to 10 stations)
B	Both sides (2 to 24 stations)

❼ SUP/EXH block assembly

Nil	Internal pilot
S	Internal pilot, Built-in silencer
R	External pilot

* 3/5(E) port is plugged for the built-in silencer type.
* When the built-in silencer type is used, keep the exhaust port from coming into direct contact with water or other liquids.

How to Order Manifold Assembly

Example (SS5Y3-10L11-□)

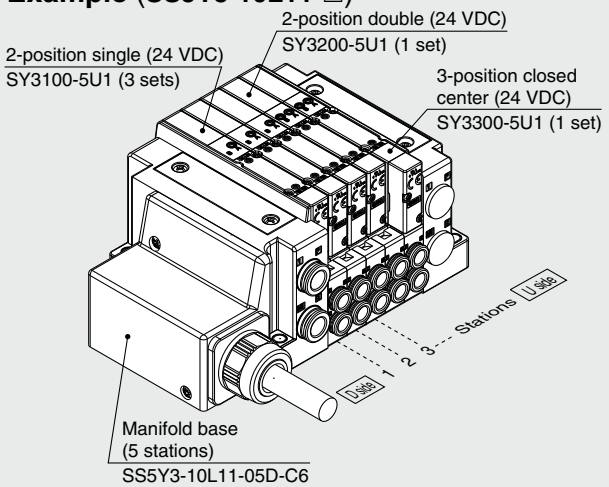

SS5Y3-10L11-05D-C6 ··· 1 set (Type 10 5-station manifold base part no.)
***SY3100-5U1 ····· 3 sets (2-position single part no.)**
***SY3200-5U1 ····· 1 set (2-position double part no.)**
***SY3300-5U1 ····· 1 set (3-position closed center part no.)**
→ The asterisk denotes the symbol for the assembly. Prefix it to the part numbers of the valve, etc.

- For the valve arrangement, the valve closest to the D side is considered the 1st station.
- Under the manifold part number, state the valves to be mounted in order starting with the 1st station as shown in the figure above. If the arrangement becomes too complicated, specify the details on a manifold specification sheet.

* When mixing top-ported configurations, select from those listed on page 84. In such cases, use caution as there is also output on the A and B ports on the base side. Specify on the manifold specification sheet if plugs are required for the A and B ports on the base side.

❽ A, B port size (Metric/One-touch fitting)

Symbol	A, B port		Type 10/Side ported			Type 11/Bottom ported	
			SY3000	SY5000	SY7000	SY5000	SY7000
C2	Straight	ø2	●	—	—	—	—
C3		ø3.2	●	—	—	—	—
C4		ø4	●	●	—	●	—
C6		ø6	●	●	●	●	●
C8		ø8	—	●	●	●	●
C10		ø10	—	—	●	—	●
C12		ø12	—	—	●	—	●
CM*1		Straight port, mixed sizes	●	●	●	●	●
L4	Elbow*2 Upward	ø4	●	●	—	—	—
L6		ø6	●	●	●	—	—
L8		ø8	—	●	●	—	—
L10		ø10	—	—	●	—	—
L12		ø12	—	—	●	—	—
B4	Elbow*2 Downward	ø4	●	●	—	—	—
B6		ø6	●	●	●	—	—
B8		ø8	—	●	●	—	—
B10		ø10	—	—	●	—	—
B12		ø12	—	—	●	—	—
LM*1		Elbow port, mixed sizes (Including upward and downward piping)	●	●	●	—	—
P, E port size (One-touch fittings)			ø8	ø10	ø12	ø10	ø12

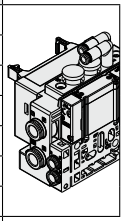
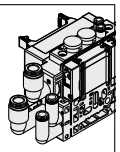
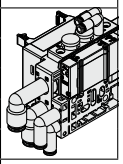

A, B port size (Inch/One-touch fitting)

Symbol	A, B port		Type 10/Side ported			Type 11/Bottom ported	
			SY3000	SY5000	SY7000	SY5000	SY7000
N1	Straight	ø1/8"	●	—	—	—	—
N3		ø5/32"	●	●	—	●	—
N7		ø1/4"	●	●	●	●	●
N9		ø5/16"	—	●	●	●	●
N11		ø3/8"	—	—	●	—	●
CM*1		Straight port, mixed sizes	●	●	●	●	●
LN3	Elbow*2 Upward	ø5/32"	●	—	—	—	—
LN7		ø1/4"	●	●	—	—	—
LN9		ø5/16"	—	●	—	—	—
LN11		ø3/8"	—	—	●	—	—
BN3	Elbow*2 Downward	ø5/32"	●	—	—	—	—
BN7		ø1/4"	●	●	—	—	—
BN9		ø5/16"	—	●	—	—	—
BN11		ø3/8"	—	—	●	—	—
LM*1		Elbow port, mixed sizes (Including upward and downward piping)	●	●	●	—	—
P, E port size (One-touch fittings)			ø5/16"	ø3/8"	ø1/2"	ø3/8"	ø1/2"

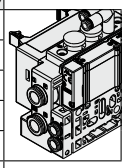
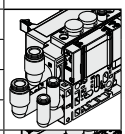
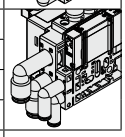

*1 Indicate the sizes on the manifold specification sheet in the case of "CM" or "LM."
The direction of P, E port fittings is the same as for the A, B port. If selecting "LM," indicate it on the manifold specification sheet for the P, E port fitting direction.

*2 To avoid interference with the body or piping, select a downward elbow port when mounting the optional spacer assembly (pages 204 to 206).

❾ Mounting and Option

Symbol	Mounting	Option	
		Name plate	Station number
Nil	Direct mounting	—	—
AA		●	●
BA		●	—
D□	DIN rail mounting	—	—
A□		●	●
B□		●	—

DIN Rail Option

Nil	Standard length	
0	Without DIN rail (with bracket)	
3	For 3 stations	Specify a longer rail than the total length of specified stations.
⋮	⋮	
24	For 24 stations	

* Enter the number of stations inside □ when it is larger than the number of valve stations. (Refer to "DIN Rail Option" above.)
* Only direct mounting is available for the type 11 bottom-ported type.
* Refer to page 295 for the fixation of DIN rail mounting type manifold.

How to Order Valves (With mounting screw)

Refer to page 15 for valve specifications.

SY 3 1 0 0 □ □ □ □ – 5 □ □ 1 – □

❶ ❷ ❸ ❹ ❺ ❻ ❼ ❽ ❾ ❿ ⓫

❸ Base mounted

❶ Series

3	SY3000
5	SY5000
7	SY7000

❷ Type of actuation

1	2-position	Single
2		Double
3	3-position	Closed center
4		Exhaust center
5		Pressure center
A*1	4-position dual 3-port	N.C./N.C.
B*1		N.O./N.O.
C*1		N.C./N.O.

*1 Only the rubber seal type is available for the 4-position dual 3-port valve.

❸ Seal type

0	Rubber seal
1	Metal seal

❹ Pilot type

Nil	Internal pilot
R	External pilot

❺ Back pressure check valve (Built-in valve type)

Nil	None
H	Built-in

* Only the rubber seal type is available. A manifold installed type is available if a back pressure check valve with a metal seal is required. Refer to page 212 for ordering examples. However, it is not recommended to use the built-in valve type and the manifold installed type at the same time because it will reduce the flow.
* The built-in valve type back pressure check valve is not available for the 3-position type or the SY7000.

❻ Pilot valve option

Nil	Standard (0.7 MPa)
B	Quick response type (0.7 MPa)
K*1	High pressure type (1.0 MPa)

*1 Only the metal seal type is available for the high pressure type.

❼ Coil type

Nil	Standard
T	With power saving circuit (Continuous duty type)

* Be sure to select the power saving circuit type if the valve is to be continuously energized for long periods of time.
* Be careful of the energizing time when the power saving circuit is selected. Refer to page 292 for details.

❽ Rated voltage

5	24 VDC
6	12 VDC

❾ Light/surge voltage suppressor and common specification

Symbol	With light	Surge voltage suppressor	Common specification
Nil	—	—	Non-polar
R	—	●	
U	●		
S	—		Positive common
Z	●		
NS	—		Negative common
NZ	●		

* For the non-polar type, be careful of surge voltage intrusion. Refer to page 293 for details.
* Only "Z" and "NZ" types are available with a power saving circuit.

❿ Manual override

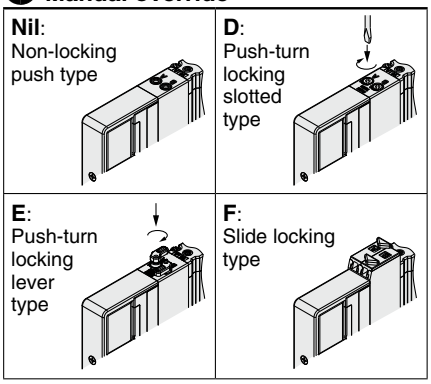

* Refer to page 34 for the safety slide locking manual override.

⓫ Type of mounting screw

Nil	Round head combination screw
B	Hexagon socket head cap screw
K	Round head combination screw (Drop prevention type)
H	Hexagon socket head cap screw (Drop prevention type)

* For "K" and "H," the valve body cover has a drop prevention construction to stop the mounting screws from falling out when the valve is removed for maintenance, etc.
* **When ordering a valve individually, the base gasket is not included.**
  Since the base gasket is attached to the manifold, please order the base gasket separately if it is needed for maintenance. Refer to page 198 for base gasket and mounting screw part numbers.
* "B" and "H" cannot be selected for the individual SUP/EXH spacer assembly, interface regulator, or double check spacer assembly with residual pressure release valve.

Protective class
class Ⅲ (Mark: Ⅲ)

Plug-in Connector Connecting Base | Type 10/Side Ported | Lead Wire

Dimensions: SY3000 Series

SS5Y3-10L$^{1}_{2}_{3}$□-Stations $^{U}_{D}$-$^{C2}_{C3, N1}_{C4, N3}_{C6, N7}$(D)

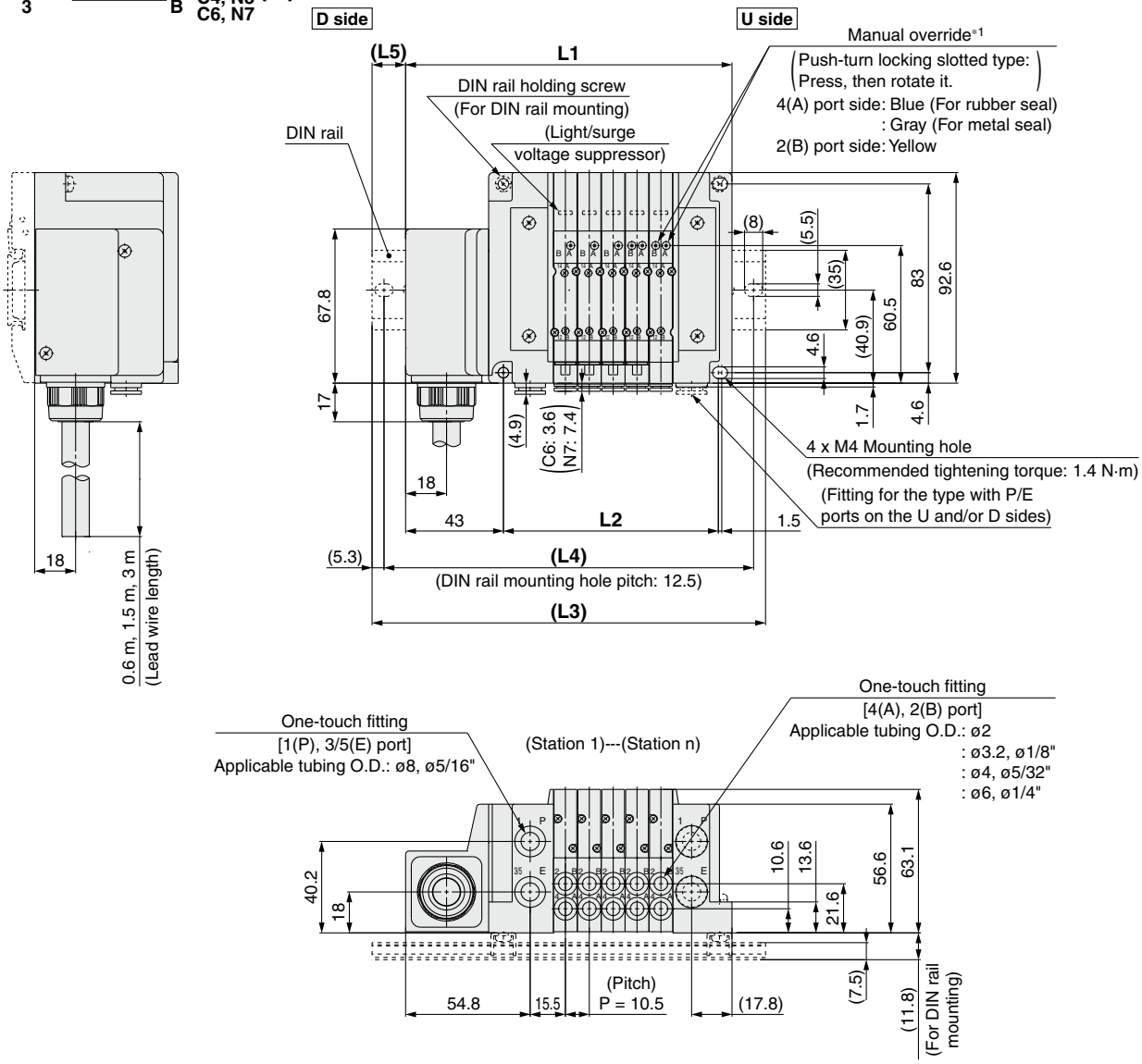

*1 Refer to page 157 for dimensions of the external pilot, silencer, elbow fittings, and slide locking manual override.
* These figures show the "SS5Y3-10L1□-05D-C6."
* Refer to page 162 for dimensions of A or B port top-ported type.

n: Stations	2	3	4	5	6	7	8	9	10	11	12	13	14	15	16	17	18	19	20	21	22	23	24
L1	112	122.5	133	143.5	154	164.5	175	185.5	196	206.5	217	227.5	238	248.5	259	269.5	280	290.5	301	311.5	322	332.5	343
L2	63	73.5	84	94.5	105	115.5	126	136.5	147	157.5	168	178.5	189	199.5	210	220.5	231	241.5	252	262.5	273	283.5	294
L3	135.5	148	160.5	173	185.5	198	210.5	210.5	223	235.5	248	260.5	273	273	285.5	298	310.5	323	335.5	335.5	348	360.5	373
L4	125	137.5	150	162.5	175	187.5	200	200	212.5	225	237.5	250	262.5	262.5	275	287.5	300	312.5	325	325	337.5	350	362.5
L5	12	13	14	15	16	17	18	12.5	13.5	14.5	15.5	16.5	17.5	12.5	13.5	14.5	15.5	16.5	17.5	12	13	14	15

Plug-in
Connector Connecting Base

Type 10/Side Ported
Lead Wire

Dimensions: SY5000 Series

SS5Y5-10L$^{1}_{2}_{3}$□-Stations $^{U\ C4, N3}_{D-C6, N7}_{B\ C8, N9}$(D)

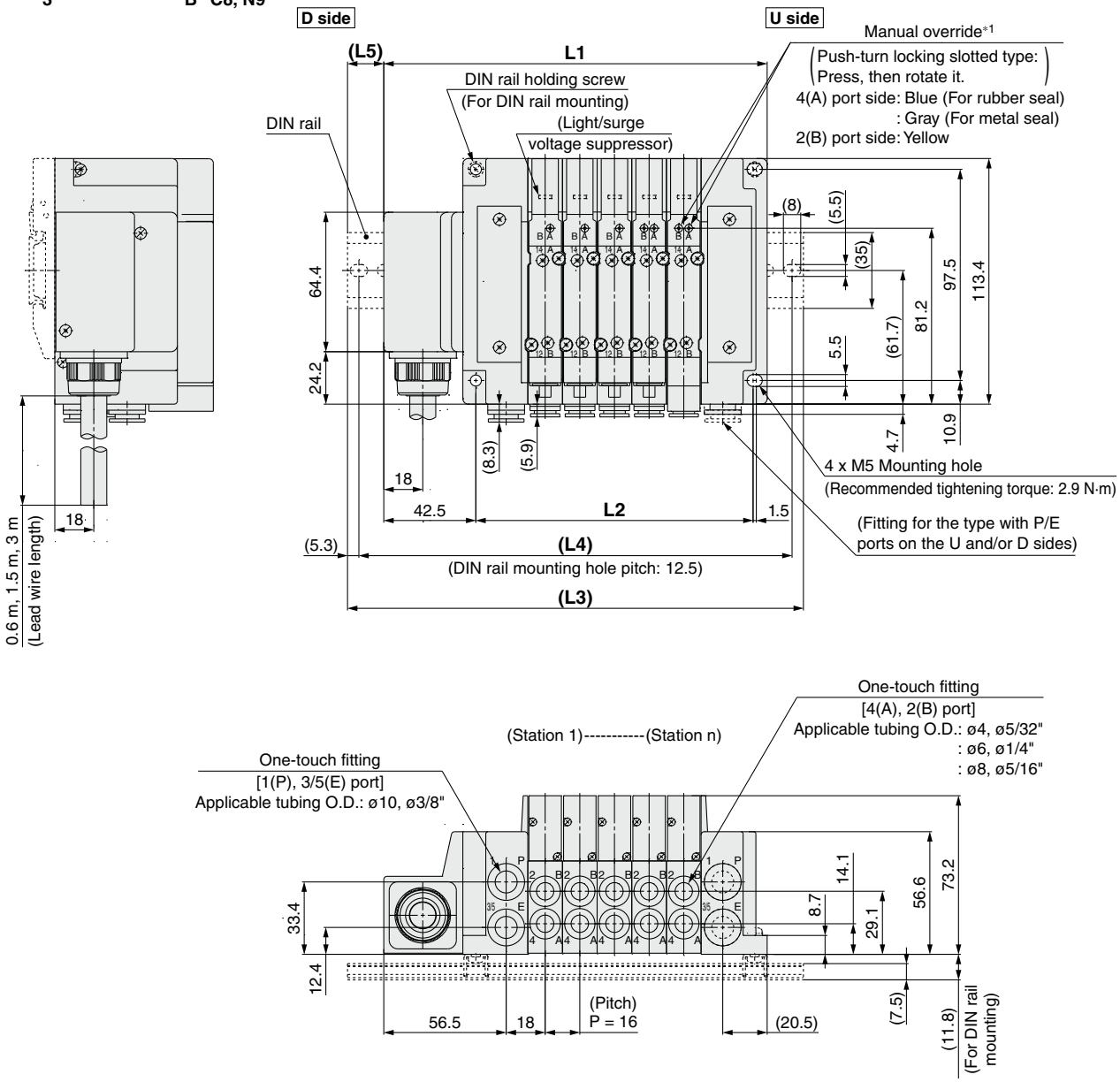

*1 Refer to page 158 for dimensions of the external pilot, silencer, elbow fittings, and slide locking manual override.
* These figures show the "SS5Y5-10L1□-05D-C8."
* Refer to page 163 for dimensions of A or B port top-ported type.

n: Stations	2	3	4	5	6	7	8	9	10	11	12	13	14	15	16	17	18	19	20	21	22	23	24
L1	129	145	161	177	193	209	225	241	257	273	289	305	321	337	353	369	385	401	417	433	449	465	481
L2	80	96	112	128	144	160	176	192	208	224	240	256	272	288	304	320	336	352	368	384	400	416	432
L3	160.5	173	185.5	210.5	223	235.5	260.5	273	285.5	298	323	335.5	348	360.5	385.5	398	410.5	435.5	448	460.5	473	498	510.5
L4	150	162.5	175	200	212.5	225	250	262.5	275	287.5	312.5	325	337.5	350	375	387.5	400	425	437.5	450	462.5	487.5	500
L5	16	14	12.5	17	15	13.5	18	16	14.5	12.5	17	15.5	13.5	12	16.5	14.5	13	17.5	15.5	14	12	16.5	15

Plug-in Connector Connecting Base | Type 10/Side Ported | Lead Wire

Dimensions: SY7000 Series

SS5Y7-10L$^{1}_{2}_{3}$□-Stations $^{U}_{D}_{B}$-$^{C6, N7}_{C8, N9}_{C10, N11}_{C12}$(D)

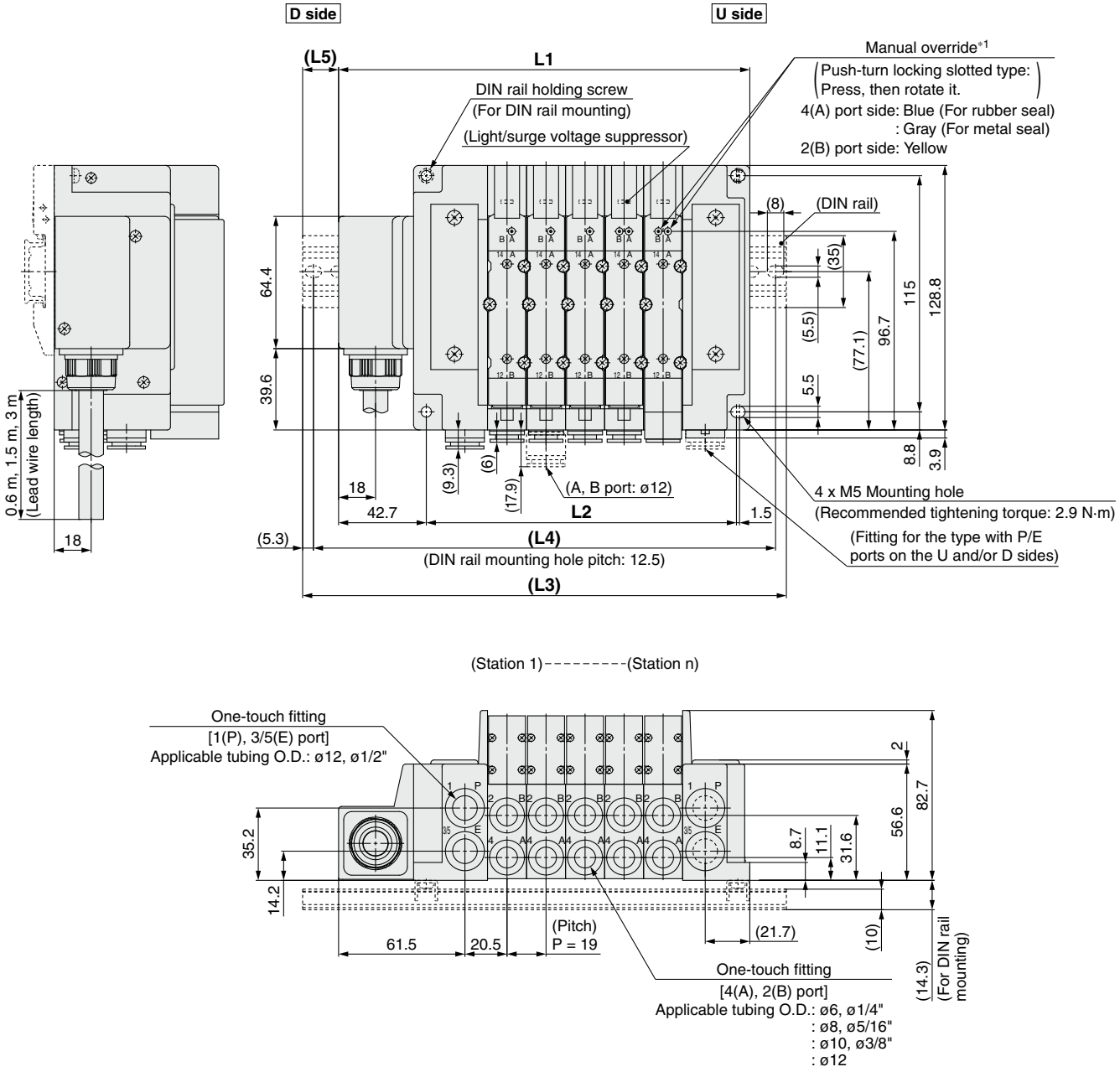

*1 Refer to page 159 for dimensions of the external pilot, silencer, elbow fittings, and slide locking manual override.
* These figures show the "SS5Y7-10L1□-05D-C10."
* Refer to page 164 for dimensions of A or B port top-ported type.

n: Stations	2	3	4	5	6	7	8	9	10	11	12	13	14	15	16	17	18	19	20	21	22	23	24
L1	143.2	162.2	181.2	200.2	219.2	238.2	257.2	276.2	295.2	314.2	333.2	352.2	371.2	390.2	409.2	428.2	447.2	466.2	485.2	504.2	523.2	542.2	561.2
L2	94	113	132	151	170	189	208	227	246	265	284	303	322	341	360	379	398	417	436	455	474	493	512
L3	173	185.5	210.5	235.5	248	273	285.5	310.5	323	348	360.5	385.5	398	423	435.5	460.5	473	498	510.5	535.5	548	573	585.5
L4	162.5	175	200	225	237.5	262.5	275	300	312.5	337.5	350	375	387.5	412.5	425	450	462.5	487.5	500	525	537.5	562.5	575
L5	15	11.5	14.5	17.5	14.5	17.5	14	17	14	17	13.5	16.5	13.5	16.5	13	16	13	16	12.5	15.5	12.5	15.5	12

Plug-in Connector Connecting Base

Lead Wire

Type 12
Top Ported

SY3000/5000/7000 Series

How to Order Manifolds

SS5Y 3 – 12 L1 1 – 05 U □ – □ □

❶ ❷ ❸ ❹ ❺ ❻ ❼ ❽

Refer to pages 162 to 164 for the dimensions of Type 12/Top-ported type.

❶ Series

3	SY3000
5	SY5000
7	SY7000

❷ Number of cores (Lead wire)

L1	34 cores
L2	17 cores
L3	9 cores

❸ Lead wire length

1	0.6 m
2	1.5 m
3	3 m

❺ P, E port entry

U∗1	U side (2 to 10 stations)
D∗1	D side (2 to 10 stations)
B	Both sides (2 to 24 stations)

∗1 ❻ For type "S", SUP/EXH block assembly with a built-in silencer, choose U or D for P, E port entry.

❹ Valve stations

(L1□)

Symbol	Stations	Note
02	2 stations	Double wiring∗1
⋮	⋮	
16	16 stations	
02	2 stations	Specified layout∗2 (Up to 32 solenoids available)
⋮	⋮	
24	24 stations	

(L3□)

Symbol	Stations	Note
02	2 stations	Double wiring∗1
⋮	⋮	
04	4 stations	
02	2 stations	Specified layout∗2 (Up to 8 solenoids available)
⋮	⋮	
08	8 stations	

(L2□)

Symbol	Stations	Note
02	2 stations	Double wiring∗1
⋮	⋮	
08	8 stations	
02	2 stations	Specified layout∗2 (Up to 16 solenoids available)
⋮	⋮	
16	16 stations	

∗1 Double wiring: 2-position single, double, 3-position, and 4-position valves can be used on all manifold stations.
Use of a 2-position single solenoid will result in an unused control signal. If this is not desired, order with a specified layout.

∗2 Specified layout: Indicate the wiring specifications on the manifold specification sheet. (Note that 2-position double, 3-position, and 4-position valves cannot be used where single wiring has been specified.)

∗ This also includes the number of the blanking plate assembly.

How to Order Manifold Assembly

Example (SS5Y3-12L11-□)

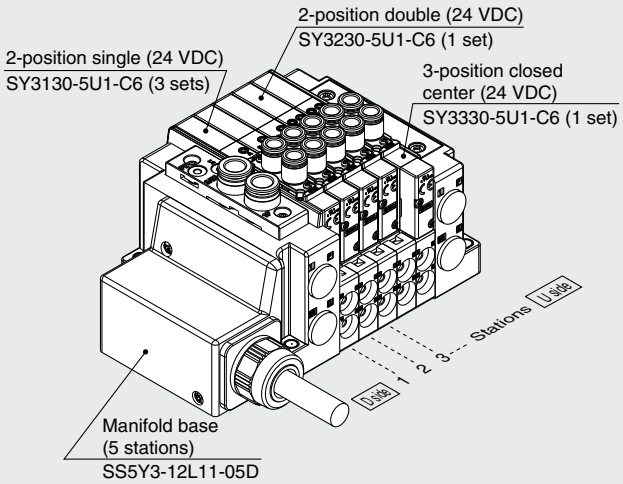

SS5Y3-12L11-05D ··· 1 set (Type 12 5-station manifold base part no.)
∗SY3130-5U1-C6 ····· 3 sets (2-position single part no.)
∗SY3230-5U1-C6 ····· 1 set (2-position double part no.)
∗SY3330-5U1-C6 ····· 1 set (3-position closed center part no.)
The asterisk denotes the symbol for the assembly. Prefix it to the part numbers of the valve, etc.

- For the valve arrangement, the valve closest to the D side is considered the 1st station.
- Under the manifold part number, state the valves to be mounted in order starting with the 1st station as shown in the figure above. If the arrangement becomes too complicated, specify the details on a manifold specification sheet.

❻ SUP/EXH block assembly

Nil	Internal pilot
S	Internal pilot, Built-in silencer
R	External pilot

∗ The P and E ports are only available on the U and D sides for the built-in silencer type. 3/5(E) port is plugged. The silencer exhaust port is located on the opposite side of the P and E port entry. (Example: When the P and E port entry is on the D side, the silencer exhaust port is on the U side.)

∗ When the built-in silencer type is used, keep the exhaust port from coming into direct contact with water or other liquids.

❼ P, E port size (One-touch fittings)

Symbol	SY3000	SY5000	SY7000
Nil	ø8	ø10	ø12
N	ø5/16"	ø3/8"	ø1/2"

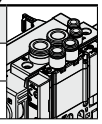

∗ For N, sizes are in inches.

❽ Mounting

Nil	Direct mounting	
D	DIN rail mounting (With DIN rail)	
D0	DIN rail mounting (Without DIN rail)	
D3	For 3 stations	Specify a length longer than that of the standard rail.
⋮	⋮	
D24	For 24 stations	

∗ Refer to page 295 for the fixation of DIN rail mounting type manifold.

How to Order Valves (With mounting screw)

Refer to page 15 for valve specifications.

SY 3 1 3 0 □ □ □ □ – 5 □ □ 1 – C6 □ – □

❶ ❷ ❸ ❹ ❺ ❻ ❼ ❽ ❾ ❿ ⓫ ⓬ ⓭

❸: Top ported

❶ Series

3	SY3000
5	SY5000
7	SY7000

❷ Type of actuation

1	2-position	Single
2		Double
3	3-position	Closed center
4		Exhaust center
5		Pressure center
A*1	4-position dual 3-port	N.C./N.C.
B*1		N.O./N.O.
C*1		N.C./N.O.

*1 Only the rubber seal type is available for the 4-position dual 3-port valve.

❸ Seal type

0	Rubber seal
1	Metal seal

❹ Pilot type

Nil	Internal pilot
R	External pilot

❺ Back pressure check valve (Built-in valve type)

Nil	None
H	Built-in

* Only the rubber seal type is available. A manifold installed type is available if a back pressure check valve with a metal seal is required. Refer to page 212 for ordering examples. However, it is not recommended to use the built-in valve type and the manifold installed type at the same time because it will reduce the flow.
* The built-in valve type back pressure check valve is not available for the 3-position type or the SY7000.

❻ Pilot valve option

Nil	Standard (0.7 MPa)
B	Quick response type (0.7 MPa)
K*1	High pressure type (1.0 MPa)

*1 Only the metal seal type is available for the high pressure type.

❼ Coil type

Nil	Standard
T	With power saving circuit (Continuous duty type)

* Be sure to select the power saving circuit type if the valve is to be continuously energized for long periods of time.
* Be careful of the energizing time when the power saving circuit is selected. Refer to page 292 for details.

❽ Rated voltage

5	24 VDC
6	12 VDC

❾ Light/surge voltage suppressor and common specification

Symbol	With light	Surge voltage suppressor	Common specification
Nil	—	—	Non-polar
R	—	●	
U	●		
S	—		Positive common
Z	●		
NS	—		Negative common
NZ	●		

* For the non-polar type, be careful of surge voltage intrusion. Refer to page 293 for details.
* Only "Z" and "NZ" types are available with a power saving circuit.

❿ Manual override

Nil: Non-locking push type

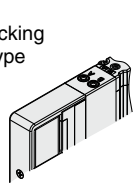

D: Push-turn locking slotted type

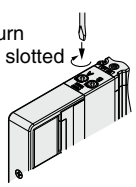

E: Push-turn locking lever type

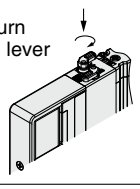

F: Slide locking type

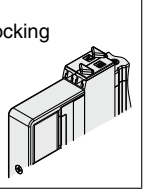

* Refer to page 34 for the safety slide locking manual override.

⓫ A, B port size

Thread piping

Symbol	Port size	Applicable series
M5	M5 x 0.8	SY3000
01	1/8	SY5000
02	1/4	SY7000

One-touch fitting (Metric)

Symbol	A, B port	SY3000	SY5000	SY7000
C2	ø2	●	—	—
C3	ø3.2	●	—	—
C4	ø4	●	●	—
C6	ø6	●	●	●
C8	ø8	—	●	●
C10	ø10	—	—	●
C12	ø12	—	—	●

One-touch fitting (Inch)

Symbol	A, B port	SY3000	SY5000	SY7000
N1	ø1/8"	●	—	—
N3	ø5/32"	●	●	—
N7	ø1/4"	●	●	●
N9	ø5/16"	—	●	●
N11	ø3/8"	—	—	●

⓬ Thread type

Nil	Rc
F	G
N	NPT
T	NPTF

* Only Nil is available for M5.

⓭ Type of mounting screw

Nil	Round head combination screw
B	Hexagon socket head cap screw
K	Round head combination screw (Drop prevention type)
H	Hexagon socket head cap screw (Drop prevention type)

* For "K" and "H," the valve body cover has a drop prevention construction to stop the mounting screws from falling out when the valve is removed for maintenance, etc.
* **When ordering a valve individually, the base gasket is not included.**
  Since the base gasket is attached to the manifold, please order the base gasket separately if it is needed for maintenance. Refer to page 198 for base gasket and mounting screw part numbers.
* "B" and "H" cannot be selected for the individual SUP/EXH spacer assembly or interface regulator.

Protective class class Ⅲ (Mark: ⧐)

Electrical Wiring Specifications

Lead wire

34 cores Lead wire
AWG26 (0.14 mm²) x 34 cores

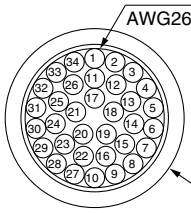

If alignment is not specified, the internal wiring will be double wiring (connected to SOL. a and SOL. b) regardless of number of stations, valve types, and option types.

Sheath O.D.
Approx. ø8.8

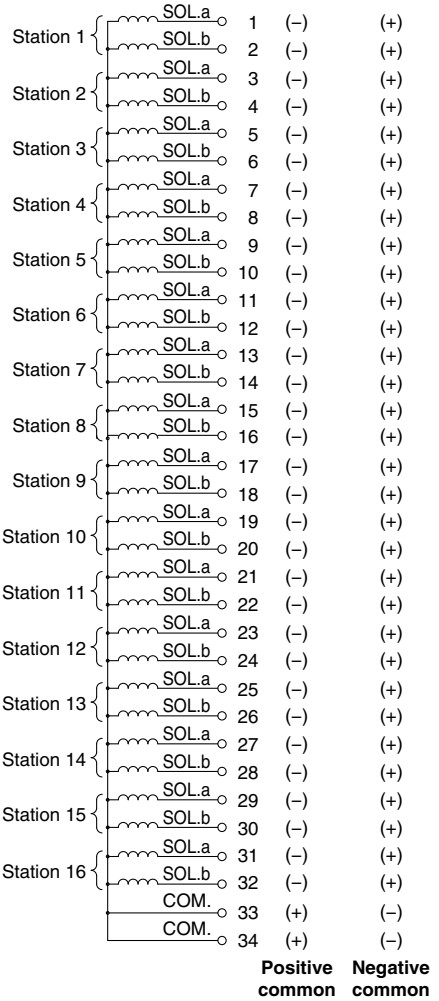

Lead wire color	Printed mark (Both sides)	
	Type	Color
Orange	–	Red / Black
Light gray	–	Red / Black
White	–	Red / Black
Yellow	–	Red / Black
Pink	–	Red / Black
Orange	– –	Red / Black
Light gray	– –	Red / Black
White	– –	Red / Black
Yellow	– –	Red / Black
Pink	– –	Red / Black
Orange	– – –	Red / Black
Light gray	– – –	Red / Black
White	– – –	Red / Black
Yellow	– – –	Red / Black
Pink	– – –	Red / Black
Orange	– – – –	Red / Black
Light gray	– – – –	Red / Black

∗ For negative common specification, a valve for negative common or a valve without polarity should be used.

Electrical characteristics

Item	Property
Conductor resistance Ω/km, 20°C	143 or less
Voltage limit V, 1 minute, AC	2000
Insulation resistance MΩ/km, 20°C	10 or more

∗ Cannot be used for movable wiring
The minimum bending radius of the cable is 55 mm.

Specified Layout

A mixture of single and double wiring can be specified on the manifold specification. The maximum number of stations is determined according to the number of solenoids. The total number of solenoids should be 32 or less. 1 solenoid is required for the 2-position single, and 2 solenoids for the 2-position double, 3-position, and 4-position.

Electrical Wiring Specifications

Lead wire

17 cores Lead wire AWG26 (0.14 mm²) x 17 cores

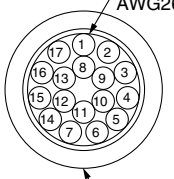

Sheath O.D. ø6.8

∗ Cannot be used for movable wiring
The minimum bending radius of the cable is 45 mm.

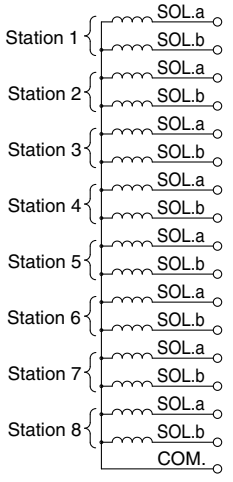

Lead wire color	Printed mark (Both sides)	
	Type	Color
Orange	–	Red / Black
Light gray	–	Red / Black
White	–	Red / Black
Yellow	–	Red / Black
Pink	–	Red / Black
Orange	– –	Red / Black
Light gray	– –	Red / Black
White	– –	Red / Black
Yellow	– –	Red

9 cores Lead wire AWG26 (0.14 mm²) x 9 cores

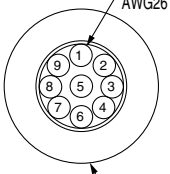

Sheath O.D. ø6.3

∗ Cannot be used for movable wiring
The minimum bending radius of the cable is 40 mm.

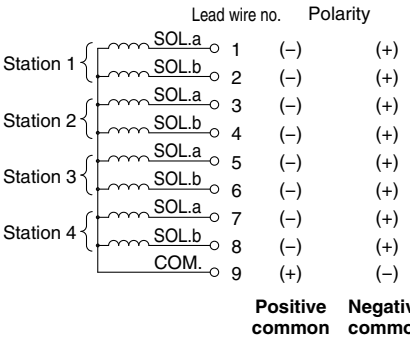

Lead wire color	Printed mark (Both sides)	
	Type	Color
Orange	–	Red / Black
Light gray	–	Red / Black
White	–	Red / Black
Yellow	–	Red / Black
Pink	–	Red

Electrical characteristics

Item	Property
Conductor resistance Ω/km, 20°C	143 or less
Voltage limit V, 1 minute, AC	2000
Insulation resistance MΩ/km, 20°C	10 or more

∗ For negative common specification, a valve for negative common or a valve without polarity should be used.

Type 10
Side Ported

Type 11
Bottom Ported

Plug-in Connector Connecting Base

Circular Connector

SY3000/5000/7000 Series

How to Order Manifolds

Refer to pages 160 (SY5000) and 161 (SY7000) for the dimensions of Type 11/Bottom-ported type.

SS5Y 5 – 10 M – 05 U □ – C6 □

❶ ❷ ❸ ❹ ❺ ❻ ❼

❶ Series

3	SY3000
5	SY5000
7	SY7000

❷ Type

10	Side ported
11	Bottom ported*1

*1 The SY5000 manifold base is used for the bottom-ported SY3000. When ordering, refer to the "Plug-in Mixed Mounting Type Manifold" (from page 165).

❸ Valve stations

Symbol	Stations	Note
02	2 stations	Double wiring*1
⋮	⋮	
12	12 stations	
02	2 stations	Specified layout*2 (Up to 24 solenoids available)
⋮	⋮	
24	24 stations	

*1 Double wiring: 2-position single, double, 3-position, and 4-position valves can be used on all manifold stations. Use of a 2-position single solenoid will result in an unused control signal. If this is not desired, order with a specified layout.

*2 Specified layout: Indicate the wiring specifications on the manifold specification sheet. (Note that 2-position double, 3-position, and 4-position valves cannot be used where single wiring has been specified.)

* This also includes the number of the blanking plate assembly.

❹ P, E port entry

U	U side (2 to 10 stations)
D	D side (2 to 10 stations)
B	Both sides (2 to 24 stations)

❺ SUP/EXH block assembly

Nil	Internal pilot
S	Internal pilot, Built-in silencer
R	External pilot

* 3/5(E) port is plugged for the built-in silencer type.
* When the built-in silencer type is used, keep the exhaust port from coming into direct contact with water or other liquids.

Refer to the page on the right for ❻.

❼ Mounting and Option

Symbol	Mounting	Option	
		Name plate	Station number
Nil	Direct mounting	—	—
AA		●	●
BA		●	—
D□	DIN rail mounting	—	—
A□		●	●
B□		●	—

* Enter the number of stations inside □ when it is larger than the number of valve stations. (Refer to "DIN Rail Option" below.)
* Only direct mounting is available for the type 11 bottom-ported type.
* Refer to page 295 for the fixation of DIN rail mounting type manifold.

DIN Rail Option

Nil	Standard length	
0	Without DIN rail (with bracket)	
3	For 3 stations	Specify a longer rail than the total length of specified stations.
⋮	⋮	
24	For 24 stations	

How to Order Manifold Assembly

Example (SS5Y3-10M-□)

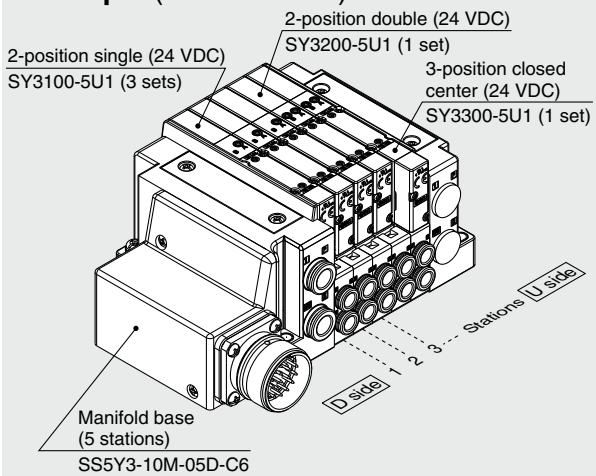

SS5Y3-10M-05D-C6 ··· 1 set (Type 10 5-station manifold base part no.)
***SY3100-5U1 ····· 3 sets (2-position single part no.)**
***SY3200-5U1 ····· 1 set (2-position double part no.)**
***SY3300-5U1 ····· 1 set (3-position closed center part no.)**
→ The asterisk denotes the symbol for the assembly. Prefix it to the part numbers of the valve, etc.

- For the valve arrangement, the valve closest to the D side is considered the 1st station.
- Under the manifold part number, state the valves to be mounted in order starting with the 1st station as shown in the figure above. If the arrangement becomes too complicated, specify the details on a manifold specification sheet.

* When mixing top-ported configurations, select from those listed on page 94. In such cases, use caution as there is also output on the A and B ports on the base side. Specify on the manifold specification sheet if plugs are required for the A and B ports on the base side.

❻ A, B port size (Metric/One-touch fitting)

Symbol	A, B port		Type 10/Side ported			Type 11/Bottom ported	
			SY3000	SY5000	SY7000	SY5000	SY7000
C2	Straight	ø2	●	—	—	—	—
C3		ø3.2	●	—	—	—	—
C4		ø4	●	●	—	●	—
C6		ø6	●	●	●	●	●
C8		ø8	—	●	●	●	●
C10		ø10	—	—	●	—	●
C12		ø12	—	—	●	—	●
CM*1		Straight port, mixed sizes	●	●	●	●	●
L4	Elbow*2 Upward	ø4	●	●	—	—	—
L6		ø6	●	●	●	—	—
L8		ø8	—	●	●	—	—
L10		ø10	—	—	●	—	—
L12		ø12	—	—	●	—	—
B4	Elbow*2 Downward	ø4	●	●	—	—	—
B6		ø6	●	●	●	—	—
B8		ø8	—	●	●	—	—
B10		ø10	—	—	●	—	—
B12		ø12	—	—	●	—	—
LM*1		Elbow port, mixed sizes (Including upward and downward piping)	●	●	●	—	—
P, E port size (One-touch fittings)			ø8	ø10	ø12	ø10	ø12

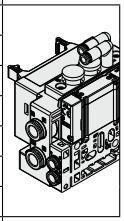
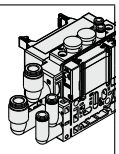
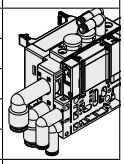

A, B port size (Inch/One-touch fitting)

Symbol	A, B port		Type 10/Side ported			Type 11/Bottom ported	
			SY3000	SY5000	SY7000	SY5000	SY7000
N1	Straight	ø1/8"	●	—	—	—	—
N3		ø5/32"	●	●	—	●	—
N7		ø1/4"	●	●	●	●	●
N9		ø5/16"	—	●	●	●	●
N11		ø3/8"	—	—	●	—	●
CM*1		Straight port, mixed sizes	●	●	●	●	●
LN3	Elbow*2 Upward	ø5/32"	●	—	—	—	—
LN7		ø1/4"	●	●	—	—	—
LN9		ø5/16"	—	●	—	—	—
LN11		ø3/8"	—	—	●	—	—
BN3	Elbow*2 Downward	ø5/32"	●	—	—	—	—
BN7		ø1/4"	●	●	—	—	—
BN9		ø5/16"	—	●	—	—	—
BN11		ø3/8"	—	—	●	—	—
LM*1		Elbow port, mixed sizes (Including upward and downward piping)	●	●	●	—	—
P, E port size (One-touch fittings)			ø5/16"	ø3/8"	ø1/2"	ø3/8"	ø1/2"

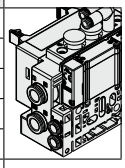
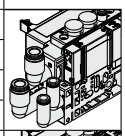
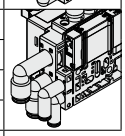

∗1 Indicate the sizes on the manifold specification sheet in the case of “CM” or “LM.”
The direction of P, E port fittings is the same as for the A, B port. If selecting “LM,” indicate it on the manifold specification sheet for the P, E port fitting direction.

∗2 To avoid interference with the body or piping, select a downward elbow port when mounting the optional spacer assembly (pages 204 to 206).

⚠ Protective class class Ⅲ (Mark: ⧫)

How to Order Valves (With mounting screw)

Refer to page 15 for valve specifications.

SY 3 1 0 0 ❶ ❷ ❸ ❹ ❺ ❻ ❼ – 5 ❽ ❾ ❿ 1 – ⓫

❸ Base mounted

❶ Series

3	SY3000
5	SY5000
7	SY7000

❷ Type of actuation

1	2-position	Single
2		Double
3	3-position	Closed center
4		Exhaust center
5		Pressure center
A*1	4-position dual 3-port	N.C./N.C.
B*1		N.O./N.O.
C*1		N.C./N.O.

*1 Only the rubber seal type is available for the 4-position dual 3-port valve.

❸ Seal type

0	Rubber seal
1	Metal seal

❹ Pilot type

Nil	Internal pilot
R	External pilot

❺ Back pressure check valve (Built-in valve type)

Nil	None
H	Built-in

* Only the rubber seal type is available. A manifold installed type is available if a back pressure check valve with a metal seal is required. Refer to page 212 for ordering examples. However, it is not recommended to use the built-in valve type and the manifold installed type at the same time because it will reduce the flow.
* The built-in valve type back pressure check valve is not available for the 3-position type or the SY7000.

❻ Pilot valve option

Nil	Standard (0.7 MPa)
B	Quick response type (0.7 MPa)
K*1	High pressure type (1.0 MPa)

*1 Only the metal seal type is available for the high pressure type.

❼ Coil type

Nil	Standard
T	With power saving circuit (Continuous duty type)

* Be sure to select the power saving circuit type if the valve is to be continuously energized for long periods of time.
* Be careful of the energizing time when the power saving circuit is selected. Refer to page 292 for details.

❽ Rated voltage

5	24 VDC
6	12 VDC

❾ Light/surge voltage suppressor and common specification

Symbol	With light	Surge voltage suppressor	Common specification
Nil	—	—	Non-polar
R	—	●	
U	●		
S	—		Positive common
Z	●		
NS	—		Negative common
NZ	●		

* For the non-polar type, be careful of surge voltage intrusion. Refer to page 293 for details.
* Only “Z” and “NZ” types are available with a power saving circuit.

❿ Manual override

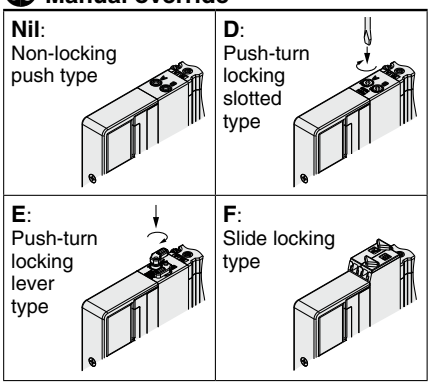

* Refer to page 34 for the safety slide locking manual override.

⓫ Type of mounting screw

Nil	Round head combination screw
B	Hexagon socket head cap screw
K	Round head combination screw (Drop prevention type)
H	Hexagon socket head cap screw (Drop prevention type)

* For “K” and “H,” the valve body cover has a drop prevention construction to stop the mounting screws from falling out when the valve is removed for maintenance, etc.
* **When ordering a valve individually, the base gasket is not included.**
  Since the base gasket is attached to the manifold, please order the base gasket separately if it is needed for maintenance. Refer to page 198 for base gasket and mounting screw part numbers.
* “B” and “H” cannot be selected for the individual SUP/EXH spacer assembly, interface regulator, or double check spacer assembly with residual pressure release valve.

Protective class
class Ⅲ (Mark: Ⅲ)

Plug-in Connector Connecting Base | Type 10/Side Ported | Circular Connector

Dimensions: SY3000 Series

SS5Y3-10M-Stations U/D/B-C2/C3, N1/C4, N3/C6, N7 (D)

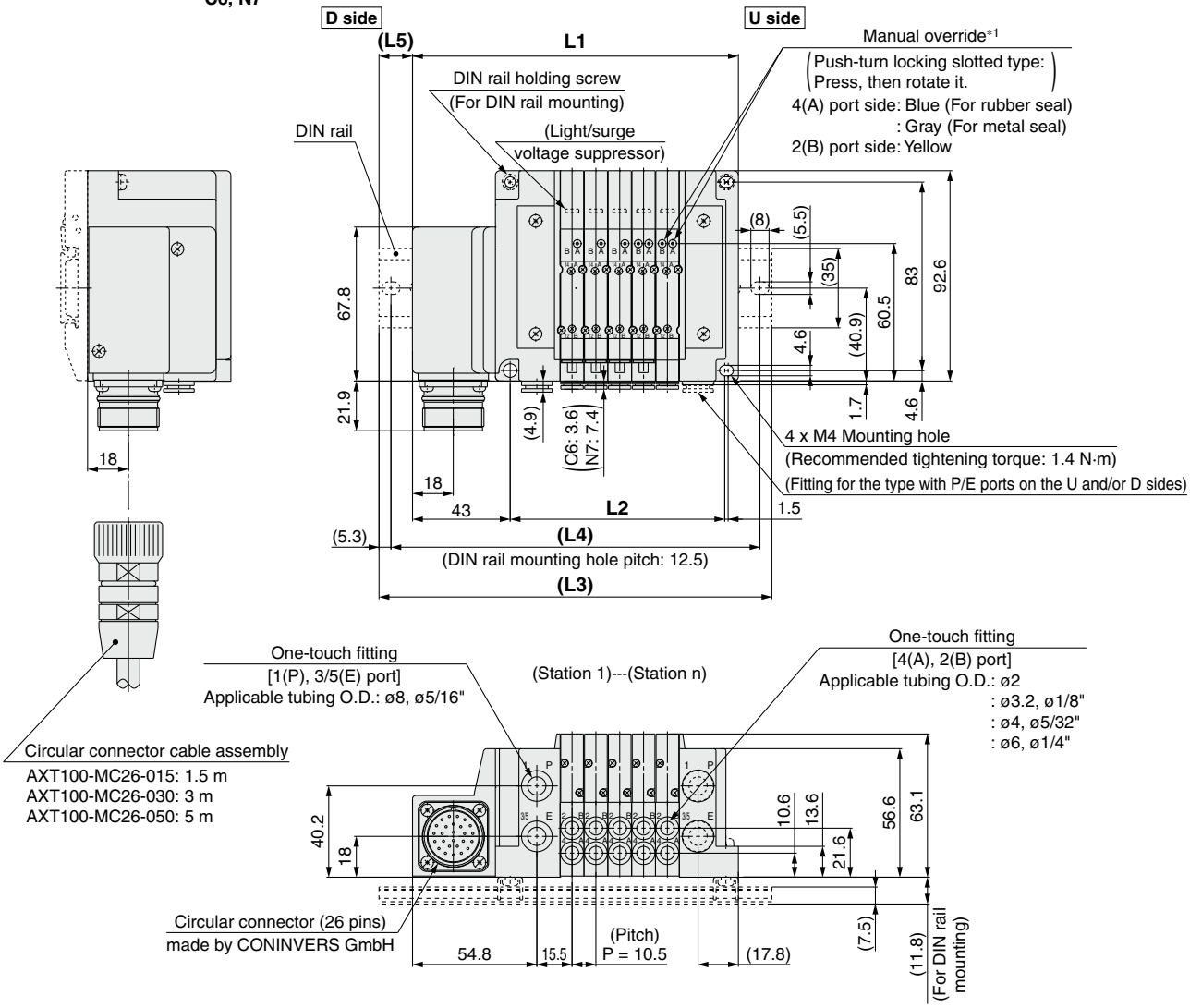

*1 Refer to page 157 for dimensions of the external pilot, silencer, elbow fittings, and slide locking manual override.
* These figures show the "SS5Y3-10M-05D-C6."
* Refer to page 162 for dimensions of A or B port top-ported type.

n: Stations	2	3	4	5	6	7	8	9	10	11	12	13	14	15	16	17	18	19	20	21	22	23	24
L1	112	122.5	133	143.5	154	164.5	175	185.5	196	206.5	217	227.5	238	248.5	259	269.5	280	290.5	301	311.5	322	332.5	343
L2	63	73.5	84	94.5	105	115.5	126	136.5	147	157.5	168	178.5	189	199.5	210	220.5	231	241.5	252	262.5	273	283.5	294
L3	135.5	148	160.5	173	185.5	198	210.5	210.5	223	235.5	248	260.5	273	273	285.5	298	310.5	323	335.5	335.5	348	360.5	373
L4	125	137.5	150	162.5	175	187.5	200	200	212.5	225	237.5	250	262.5	262.5	275	287.5	300	312.5	325	325	337.5	350	362.5
L5	12	13	14	15	16	17	18	12.5	13.5	14.5	15.5	16.5	17.5	12.5	13.5	14.5	15.5	16.5	17.5	12	13	14	15

Plug-in Connector Connecting Base | Type 10/Side Ported | Circular Connector

Dimensions: SY5000 Series

SS5Y5-10M- Stations **U** C4, N3 **D** C6, N7 **B** C8, N9 **(D)**

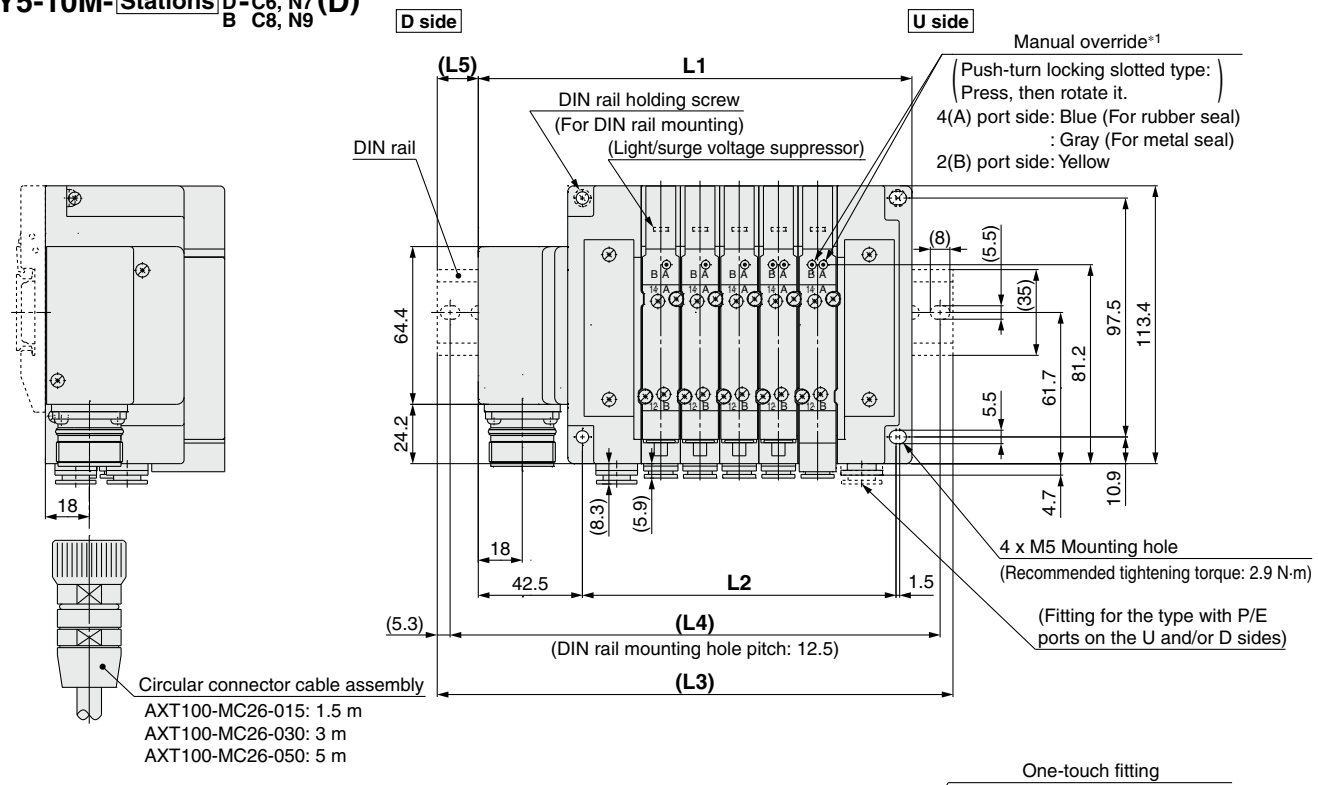

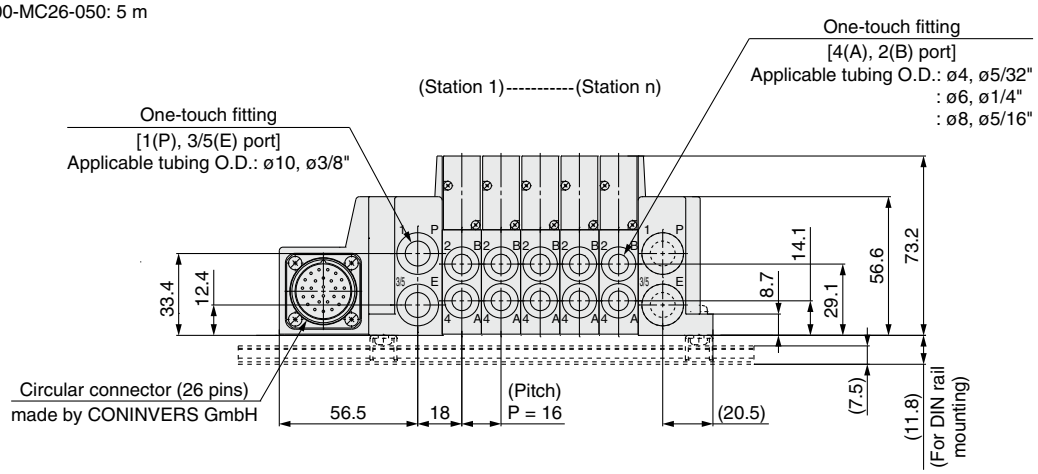

*1 Refer to page 158 for dimensions of the external pilot, silencer, elbow fittings, and slide locking manual override.
* These figures show the "SS5Y5-10M-05D-C8."
* Refer to page 163 for dimensions of A or B port top-ported type.

n: Stations	2	3	4	5	6	7	8	9	10	11	12	13	14	15	16	17	18	19	20	21	22	23	24
L1	129	145	161	177	193	209	225	241	257	273	289	305	321	337	353	369	385	401	417	433	449	465	481
L2	80	96	112	128	144	160	176	192	208	224	240	256	272	288	304	320	336	352	368	384	400	416	432
L3	160.5	173	185.5	210.5	223	235.5	260.5	273	285.5	298	323	335.5	348	360.5	385.5	398	410.5	435.5	448	460.5	473	498	510.5
L4	150	162.5	175	200	212.5	225	250	262.5	275	287.5	312.5	325	337.5	350	375	387.5	400	425	437.5	450	462.5	487.5	500
L5	16	14	12.5	17	15	13.5	18	16	14.5	12.5	17	15.5	13.5	12	16.5	14.5	13	17.5	15.5	14	12	16.5	15

Plug-in Connector Connecting Base | Type 10/Side Ported | Circular Connector

Dimensions: SY7000 Series

SS5Y7-10M- Stations **U / D / B** - **C6, N7 / C8, N9 / C10, N11 / C12** **(D)**

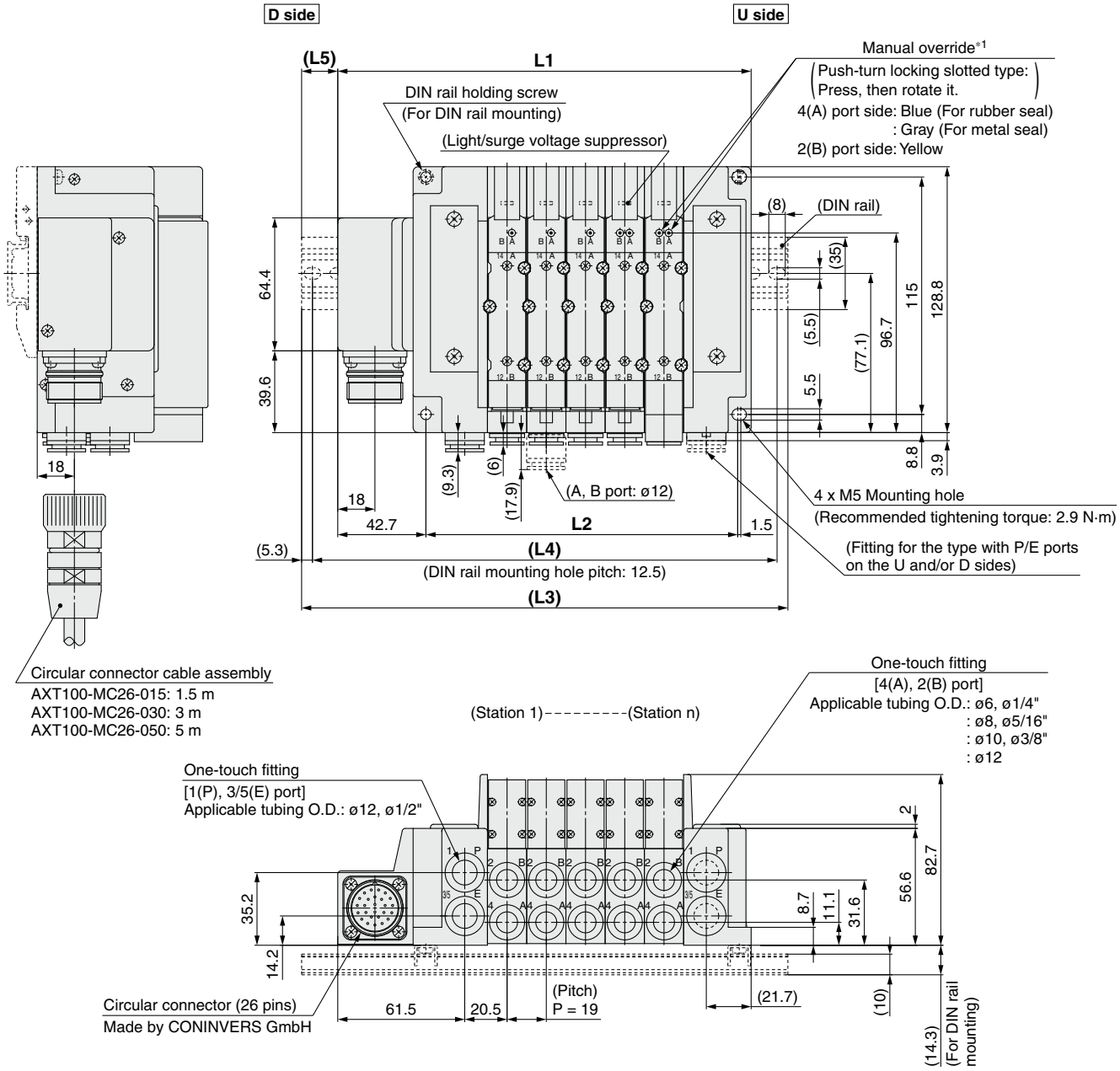

*1 Refer to page 159 for dimensions of the external pilot, silencer, elbow fittings, and slide locking manual override.
* These figures show the "SS5Y7-10M-05D-C10."
* Refer to page 164 for dimensions of A or B port top-ported type.

n: Stations	2	3	4	5	6	7	8	9	10	11	12	13	14	15	16	17	18	19	20	21	22	23	24
L1	143.2	162.2	181.2	200.2	219.2	238.2	257.2	276.2	295.2	314.2	333.2	352.2	371.2	390.2	409.2	428.2	447.2	466.2	485.2	504.2	523.2	542.2	561.2
L2	94	113	132	151	170	189	208	227	246	265	284	303	322	341	360	379	398	417	436	455	474	493	512
L3	173	185.5	210.5	235.5	248	273	285.5	310.5	323	348	360.5	385.5	398	423	435.5	460.5	473	498	510.5	535.5	548	573	585.5
L4	162.5	175	200	225	237.5	262.5	275	300	312.5	337.5	350	375	387.5	412.5	425	450	462.5	487.5	500	525	537.5	562.5	575
L5	15	11.5	14.5	17.5	14.5	17.5	14	17	14	17	13.5	16.5	13.5	16.5	13	16	13	16	12.5	15.5	12.5	15.5	12

Plug-in Connector Connecting Base

Circular Connector

Type 12
Top Ported

SY3000/5000/7000 Series

How to Order Manifolds

SS5Y 3 – 12M – 05 U □ – □ □

❶ ❷ ❸ ❹ ❺ ❻

Refer to pages 162 to 164 for the dimensions of Type 12/Top-ported type.

❶ Series

3	SY3000
5	SY5000
7	SY7000

❷ Valve stations

Symbol	Stations	Note
02	2 stations	Double wiring*1
⋮	⋮	
12	12 stations	
02	2 stations	Specified layout*2 (Up to 24 solenoids available)
⋮	⋮	
24	24 stations	

*1 Double wiring: 2-position single, double, 3-position, and 4-position valves can be used on all manifold stations. Use of a 2-position single solenoid will result in an unused control signal. If this is not desired, order with a specified layout.
*2 Specified layout: Indicate the wiring specifications on the manifold specification sheet. (Note that 2-position double, 3-position, and 4-position valves cannot be used where single wiring has been specified.)
* This also includes the number of the blanking plate assembly.

❸ P, E port entry

U*1	U side (2 to 10 stations)
D*1	D side (2 to 10 stations)
B	Both sides (2 to 24 stations)

*1 ❹ For type "S", SUP/EXH block assembly with a built-in silencer, choose U or D for P, E port entry.

❹ SUP/EXH block assembly

Nil	Internal pilot
S	Internal pilot, Built-in silencer
R	External pilot

* The P and E ports are only available on the U and D sides for the built-in silencer type. 3/5(E) port is plugged. The silencer exhaust port is located on the opposite side of the P and E port entry. (Example: When the P and E port entry is on the D side, the silencer exhaust port is on the U side.)
* When the built-in silencer type is used, keep the exhaust port from coming into direct contact with water or other liquids.

How to Order Manifold Assembly

Example (SS5Y3-12M-□)

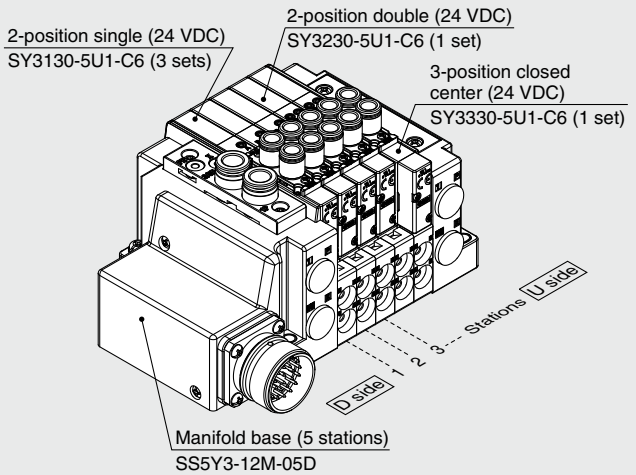

SS5Y3-12M-05D ····· 1 set (Type 12 5-station manifold base part no.)
***SY3130-5U1-C6 ····· 3 sets (2-position single part no.)**
***SY3230-5U1-C6 ····· 1 set (2-position double part no.)**
***SY3330-5U1-C6 ····· 1 set (3-position closed center part no.)**
→ **The asterisk denotes the symbol for the assembly. Prefix it to the part numbers of the valve, etc.**

- For the valve arrangement, the valve closest to the D side is considered the 1st station.
- Under the manifold part number, state the valves to be mounted in order starting with the 1st station as shown in the figure above. If the arrangement becomes too complicated, specify the details on a manifold specification sheet.

❺ P, E port size (One-touch fittings)

Symbol	SY3000	SY5000	SY7000
Nil	ø8	ø10	ø12
N	ø5/16"	ø3/8"	ø1/2"

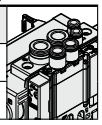

* For N, sizes are in inches.

❻ Mounting

Nil	Direct mounting	
D	DIN rail mounting (With DIN rail)	
D0	DIN rail mounting (Without DIN rail)	
D3	For 3 stations	Specify a length longer than that of the standard rail.
⋮	⋮	
D24	For 24 stations	

* Refer to page 295 for the fixation of DIN rail mounting type manifold.

How to Order Valves (With mounting screw)

Refer to page 15 for valve specifications.

SY 3 1 3 0 □ □ □ □ – 5 □ □ 1 – C6 □ – □

❶ ❷ ❸ ❹ ❺ ❻ ❼ ❽ ❾ ❿ ⓫ ⓬ ⓭

❸: Top ported

❶ Series

3	SY3000
5	SY5000
7	SY7000

❷ Type of actuation

1	2-position	Single
2		Double
3	3-position	Closed center
4		Exhaust center
5		Pressure center
A*1	4-position dual 3-port	N.C./N.C.
B*1		N.O./N.O.
C*1		N.C./N.O.

*1 Only the rubber seal is available for the 4-position dual 3-port valve.

❸ Seal type

0	Rubber seal
1	Metal seal

❹ Pilot type

Nil	Internal pilot
R	External pilot

❺ Back pressure check valve (Built-in valve type)

Nil	None
H	Built-in

* Only the rubber seal type is available. A manifold installed type is available if a back pressure check valve with a metal seal is required. Refer to page 212 for ordering examples. However, it is not recommended to use the built-in valve type and the manifold installed type at the same time because it will reduce the flow.
* The built-in valve type back pressure check valve is not available for the 3-position type or the SY7000.

❻ Pilot valve option

Nil	Standard (0.7 MPa)
B	Quick response type (0.7 MPa)
K*1	High pressure type (1.0 MPa)

*1 Only the metal seal type is available for the high pressure type.

❼ Coil type

Nil	Standard
T	With power saving circuit (Continuous duty type)

* Be sure to select the power saving circuit type if the valve is to be continuously energized for long periods of time.
* Be careful of the energizing time when the power saving circuit is selected. Refer to page 292 for details.

❽ Rated voltage

5	24 VDC
6	12 VDC

❾ Light/surge voltage suppressor and common specification

Symbol	With light	Surge voltage suppressor	Common specification
Nil	—	—	Non-polar
R	—	●	
U	●		
S	—		Positive common
Z	●		
NS	—		Negative common
NZ	●		

* For the non-polar type, be careful of surge voltage intrusion. Refer to page 293 for details.
* Only "Z" and "NZ" types are available with a power saving circuit.

❿ Manual override

Nil: Non-locking push type

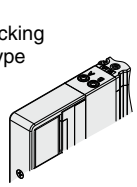

D: Push-turn locking slotted type

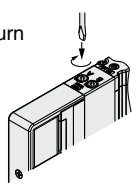

E: Push-turn locking lever type

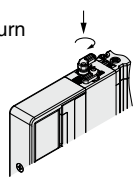

F: Slide locking type

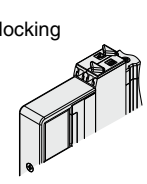

* Refer to page 34 for the safety slide locking manual override.

⓫ A, B port size

Thread piping

Symbol	Port size	Applicable series
M5	M5 x 0.8	SY3000
01	1/8	SY5000
02	1/4	SY7000

One-touch fitting (Metric)

Symbol	A, B port	SY3000	SY5000	SY7000
C2	ø2	●	—	—
C3	ø3.2	●	—	—
C4	ø4	●	●	—
C6	ø6	●	●	●
C8	ø8	—	●	●
C10	ø10	—	—	●
C12	ø12	—	—	●

One-touch fitting (Inch)

Symbol	A, B port	SY3000	SY5000	SY7000
N1	ø1/8"	●	—	—
N3	ø5/32"	●	●	—
N7	ø1/4"	●	●	●
N9	ø5/16"	—	●	●
N11	ø3/8"	—	—	●

⓬ Thread type

Nil	Rc
F	G
N	NPT
T	NPTF

* Only Nil is available for M5.

⓭ Type of mounting screw

Nil	Round head combination screw
B	Hexagon socket head cap screw
K	Round head combination screw (Falling-out-prevention type)
H	Hexagon socket head cap screw (Falling-out-prevention type)

* For "K" and "H," the valve body cover has a drop prevention construction to stop the mounting screws from falling out when the valve is removed for maintenance, etc.
* **When ordering a valve individually, the base gasket is not included.**
  Since the base gasket is attached to the manifold, please order the base gasket separately if it is needed for maintenance. Refer to page 198 for base gasket and mounting screw part numbers.
* "B" and "H" cannot be selected for the individual SUP/EXH spacer assembly or interface regulator.

⚠ Protective class class Ⅲ (Mark: Ⅲ)

Electrical Wiring Specifications

Circular connector

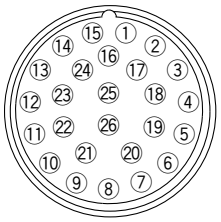

If alignment is not specified, the internal wiring will be double wiring (connected to SOL. a and SOL. b) regardless of number of stations, valve types, and option types.

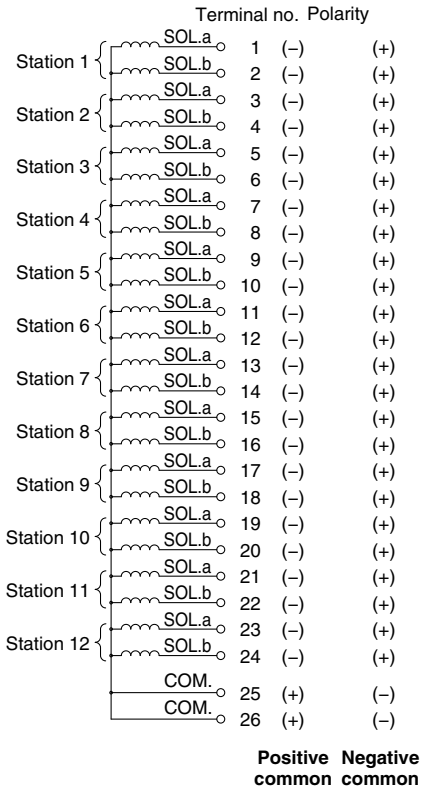

* When using a valve with no polarity, either positive common or negative common can be used.

Specified Layout

A mixture of single and double wiring can be specified on the manifold specification sheet. The maximum number of stations is determined according to the number of solenoids. The total number of solenoids should be 24 or less. 1 solenoid is required for the 2-position single, and 2 solenoids for the 2-position double, 3-position, and 4-position.

Cable Assembly

AXT100-MC26- 015 / 030 / 050

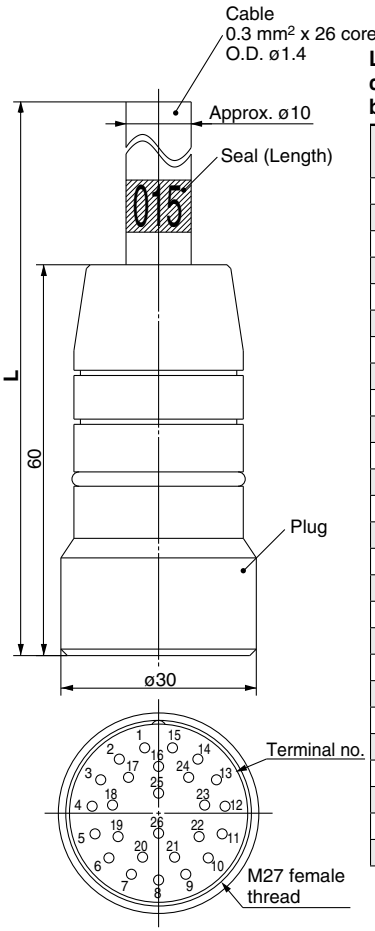

Lead wire color for circular connector cable assembly by terminal number

Terminal no.	Lead wire color	Dot marking
1	Black	None
2	Brown	None
3	Red	None
4	Orange	None
5	Yellow	None
6	Pink	None
7	Blue	None
8	Purple	White
9	Gray	Black
10	White	Black
11	White	Red
12	Yellow	Red
13	Orange	Red
14	Yellow	Black
15	Pink	Black
16	Blue	White
17	Purple	None
18	Gray	None
19	Orange	Black
20	Red	White
21	Brown	White
22	Pink	Red
23	Gray	Red
24	Black	White
25	White	None
26	White	None

Circular connector cable assembly

Cable length (**L**)	Assembly part no.
	26 pins
1.5 m	AXT100-MC26-015
3 m	AXT100-MC26-030
5 m	AXT100-MC26-050

* Cannot be used for movable wiring
* Lengths other than the above is also available. Please contact SMC for details.

Electrical characteristics

Item	Property
Conductor resistance Ω/km, 20°C	65 or less
Voltage limit V, 1 minute, AC	1000
Insulation resistance MΩ/km, 20°C	5 or more

* The minimum bending radius of the circular connector cable is 20 mm.

Type 10
Side Ported

Type 11
Bottom Ported

Plug-in Connector Connecting Base

EX500 Gateway Decentralized System 2 (128 Points)

SY3000/5000/7000 Series

How to Order Manifolds

Refer to pages 160 (SY5000) and 161 (SY7000) for the dimensions of Type 11/Bottom-ported type.

SS5Y 3 – 10 S A3N – 05 U □ – C6 □

❶ ❷ ❸ ❹ ❺ ❻ ❼ ❽

❶ Series

3	SY3000
5	SY5000
7	SY7000

∗ For mixed mounting, refer to page 165 and later.

❷ Type

10	Side ported
11	Bottom ported∗1

∗1 The SY5000 manifold base is used for the bottom-ported SY3000. When ordering, refer to the "Plug-in Mixed Mounting Type Manifold" (from page 165).

∗ When mixing top-ported configurations, select from those listed on page 110. In such cases, use caution as there is also output on the A and B ports on the base side. Specify on the manifold specification sheet if plugs are required for the A and B ports on the base side.

❸ SI unit (Number of outputs, Output polarity, Max. number of valve stations)

0	Without SI unit
A3N	32 outputs∗1∗4, 2 to 16 stations (24 stations∗3), Negative common∗2

∗1 16 outputs can be set by switching the built-in setting switch.

∗2 Ensure a match with the common specification of the valve.

∗3 ( ): Maximum number of stations for mixed single and double wiring

∗4 When using the SI unit with 32 outputs, use the GW unit compatible with the EX500 Gateway Decentralized System 2 (128 points).

❹ Valve stations

	Stations	Note
02	2 stations	Double wiring∗1
⋮	⋮	
16	16 stations	
02	2 stations	Specified layout∗2 (Up to 32 solenoids available)
⋮	⋮	
24	24 stations	

∗1 Double wiring: 2-position single, double, 3-position, and 4-position valves can be used on all manifold stations. Use of a 2-position single solenoid will result in an unused control signal. If this is not desired, order with a specified layout.

∗2 Specified layout: Indicate the wiring specifications on the manifold specification sheet. (Note that 2-position double, 3-position, and 4-position valves cannot be used where single wiring has been specified.)

∗ When the product without the SI unit (S0) is selected, note the maximum number of solenoids of the SI unit that will be mounted. If the layout is specified, indicate it on the manifold specification sheet.

∗ This also includes the number of the blanking plate assembly.

❺ P, E port entry

U	U side (2 to 10 stations)
D	D side (2 to 10 stations)
B	Both sides (2 to 24 stations)

❻ SUP/EXH block assembly

Nil	Internal pilot
S	Internal pilot, Built-in silencer∗1∗2
R	External pilot

∗1 3/5(E) port is plugged for the built-in silencer type.

∗2 When built-in silencer type is used, keep the exhaust port from coming into direct contact with water or other liquids.

How to Order Manifold Assembly

Example

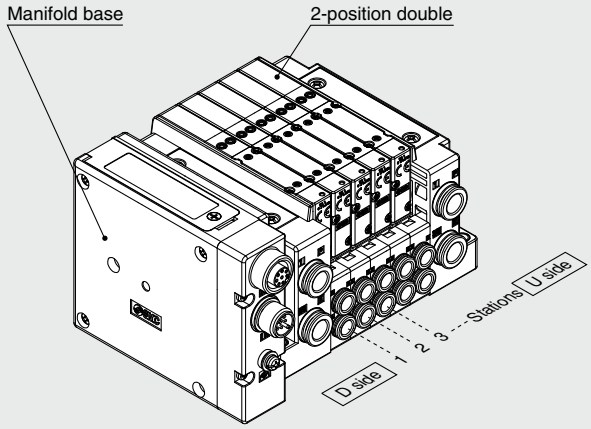

SS5Y3-10SA3N-05D-C6···1 set (Manifold base part number)
∗ SY3200-5U1·····5 sets (2-position double part number)
The asterisk denotes the symbol for the assembly. Prefix it to the part numbers of the valve, etc.

- For the valve arrangement, the valve closest to the D side is considered the 1st station.
- Under the manifold base part number, state the valves to be mounted in order starting with the 1st station as shown in the figure above. If the arrangement becomes too complicated, specify the details on a manifold specification sheet.

∗ A separate GW unit and communication cable are required.

For details on the EX500 Gateway Type Serial Transmission System, refer to the **Web Catalog** and the Operation Manual. For the part numbers of the SI units to be mounted, refer to page 188. Please download the Operation Manual via the SMC website, https://www.smcworld.com

❼ A, B port size (Metric/One-touch fitting)

			A, B port	Type 10/Side ported			Type 11/Bottom ported	
				SY3000	SY5000	SY7000	SY5000	SY7000
C2	Straight		ø2	●	—	—	—	—
C3			ø3.2	●	—	—	—	—
C4			ø4	●	●	—	●	—
C6			ø6	●	●	●	●	●
C8			ø8	—	●	●	●	●
C10			ø10	—	—	●	—	●
C12			ø12	—	—	●	—	●
CM*1			Mixed sizes	●	●	●	●	●
L4	Elbow*2	Upward	ø4	●	●	—	—	—
L6			ø6	●	●	●	—	—
L8			ø8	—	●	●	—	—
L10			ø10	—	—	●	—	—
L12			ø12	—	—	●	—	—
B4		Downward	ø4	●	●	—	—	—
B6			ø6	●	●	●	—	—
B8			ø8	—	●	●	—	—
B10			ø10	—	—	●	—	—
B12			ø12	—	—	●	—	—
LM*1			Mixed sizes	●	●	●	—	—
	P, E port*3			ø8	ø10	ø12	ø10	ø12

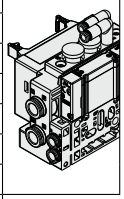
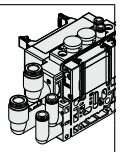
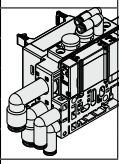

A, B port size (Inch/One-touch fitting)

			A, B port	Type 10/Side ported			Type 11/Bottom ported	
				SY3000	SY5000	SY7000	SY5000	SY7000
N1	Straight		ø1/8"	●	—	—	—	—
N3			ø5/32"	●	●	—	●	—
N7			ø1/4"	●	●	●	●	●
N9			ø5/16"	—	●	●	●	●
N11			ø3/8"	—	—	●	—	●
CM*1			Mixed sizes	●	●	●	●	●
LN3	Elbow*2	Upward	ø5/32"	●	—	—	—	—
LN7			ø1/4"	●	●	—	—	—
LN9			ø5/16"	—	●	—	—	—
LN11			ø3/8"	—	—	●	—	—
BN3		Downward	ø5/32"	●	—	—	—	—
BN7			ø1/4"	●	●	—	—	—
BN9			ø5/16"	—	●	—	—	—
BN11			ø3/8"	—	—	●	—	—
LM*1			Mixed sizes	●	●	●	—	—
	P, E port*3			ø5/16"	ø3/8"	ø1/2"	ø3/8"	ø1/2"

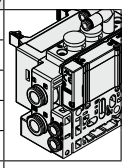
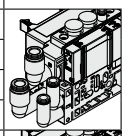
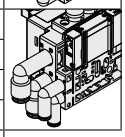

*1 Indicate the sizes on the manifold specification sheet.
*2 To avoid interference with the body or piping, select a downward elbow port when mounting the optional spacer assembly (pages 204 to 206).
*3 The direction of P, E port fittings is the same as for the A, B port. If selecting "LM," indicate it on the manifold specification sheet for the P, E port fitting direction.

❽ Mounting and Option

	Mounting	Option	
		Name plate	Station number
Nil	Direct mounting	—	—
AA		●	●
BA		●	—
D□*1	DIN rail mounting	—	—
A□*1		●	●
B□*1		●	—

*1 Refer to "DIN Rail Option" below.
* Select the direct mounting type for Type 11 (Bottom ported).

DIN Rail Option

Nil	With DIN bracket, DIN rail with standard length
0	With DIN bracket, without DIN rail
3*1	With DIN bracket, DIN rail for 3 stations
⋮	⋮
24*1	With DIN bracket, DIN rail for 24 stations

*1 Specify a longer rail than the length of valve stations.
* If the DIN rail must be mounted without an SI unit, select "D0" and order the DIN rail separately. Refer to L3 of the dimensions for the DIN rail length. Refer to page 203 for the DIN rail part number.
* Refer to page 295 for the fixation of DIN rail mounting type manifold.

Protective class class Ⅲ (Mark: ⧫)

How to Order Valves (With mounting screw)

Refer to page 15 for valve specifications.

SY 3 1 0 0 □ □ □ □ – 5 □ □ 1 – □

❶ ❷ ❸ ❹ ❺ ❻ ❼ ❽ ❾ ❿ ⓫

❸ Base mounted

❶ Series

3	SY3000
5	SY5000
7	SY7000

❷ Type of actuation

1	2-position	Single
2		Double
3	3-position	Closed center
4		Exhaust center
5		Pressure center
A∗1	4-position dual 3-port valve	N.C./N.C.
B∗1		N.O./N.O.
C∗1		N.C./N.O.

∗1 Select the rubber seal type for the 4-position dual 3-port valve.

❸ Seal type

0	Rubber seal
1	Metal seal

❹ Pilot type

Nil	Internal pilot
R	External pilot

❺ Back pressure check valve

Nil	None
H∗1	Built-in

∗1 Select the rubber seal type when the back pressure check valve is built-in. A manifold installed type is available if a back pressure check valve with a metal seal is required. Refer to page 212 for ordering examples. However, it is not recommended to use the built-in valve type and the manifold installed type at the same time because it will reduce the flow.

∗ Select "Nil" for the 3-position type or the SY7000.

❻ Pilot valve option

Nil	Standard (0.7 MPa)
B	Quick response type (0.7 MPa)
K∗1	High pressure type (1.0 MPa)

∗1 Select the metal seal type for the high pressure type.

❼ Coil type

Nil	Standard
T	With power saving circuit (Continuous duty type)∗1∗2

∗1 Be sure to select the power saving circuit type if the valve is to be continuously energized for long periods of time.

∗2 Be careful of the energizing time when the power saving circuit is selected. For details, refer to page 292.

❽ Rated voltage

5	24 VDC

❾ Light/surge voltage suppressor and common specification

	With light	Surge voltage suppressor	Common specification
R	—	●	Non-polar
U	●		
NS	—		Negative common
NZ	●		

∗ Select "NZ" for models with a power saving circuit.

❿ Manual override

Nil Non-locking push type	D Push-turn locking slotted type
E Push-turn locking lever type	F Slide locking type

∗ Refer to page 34 for the safety slide locking manual override.

⓫ Type of mounting screw

Nil	Round head combination screw
B	Hexagon socket head cap screw
K	Round head combination screw (Drop prevention type)∗1
H	Hexagon socket head cap screw (Drop prevention type)∗1

∗1 For "K" and "H," the valve body cover has a drop prevention construction to stop the mounting screws from falling out when the valve is removed for maintenance, etc.

∗ **When ordering a valve individually, the base gasket is not included.**
Since the base gasket is attached to the manifold, please order the base gasket separately if it is needed for maintenance. Refer to page 198 for base gasket and mounting screw part numbers.

∗ Select "Nil" or "K" for the optional individual SUP/EXH spacer assembly, interface regulator, or double check spacer assembly with residual pressure release valve.

⚠ Protective class class Ⅲ (Mark: ⧫)

Plug-in Connector Connecting Base | Type 10/Side Ported | EX500 (128 Points)

Dimensions: SY3000 Series

SS5Y3-10SA3N- Stations **U** C2 / **D** C3, N1 / **B** C4, N3 C6, N7 **(D)**

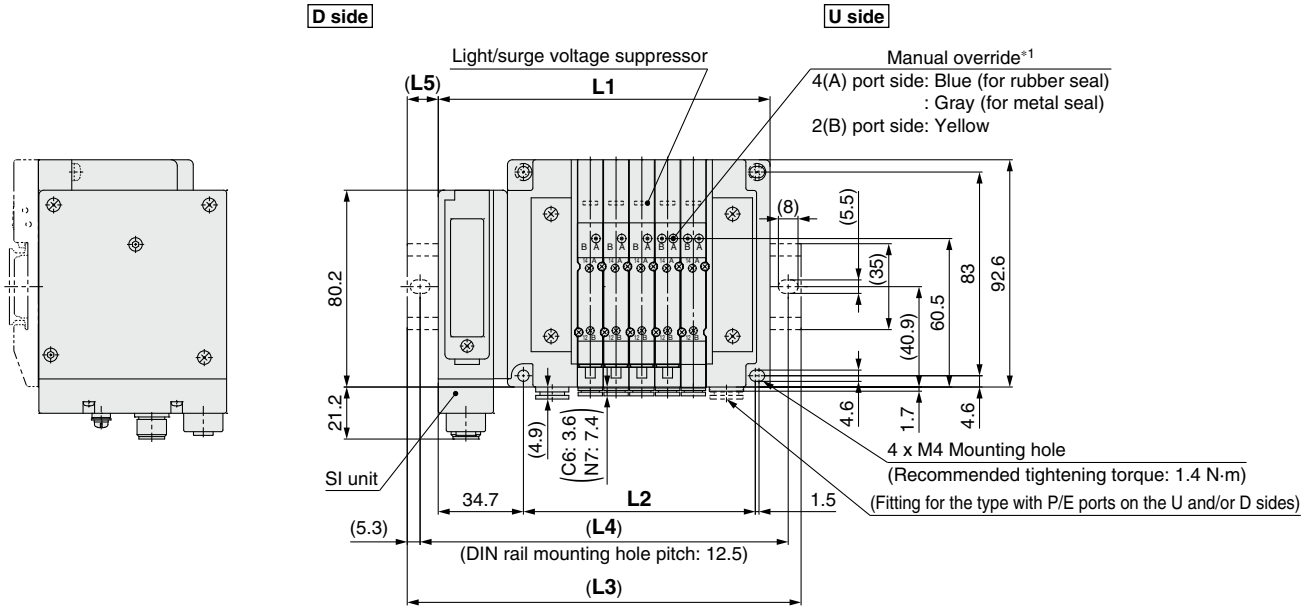

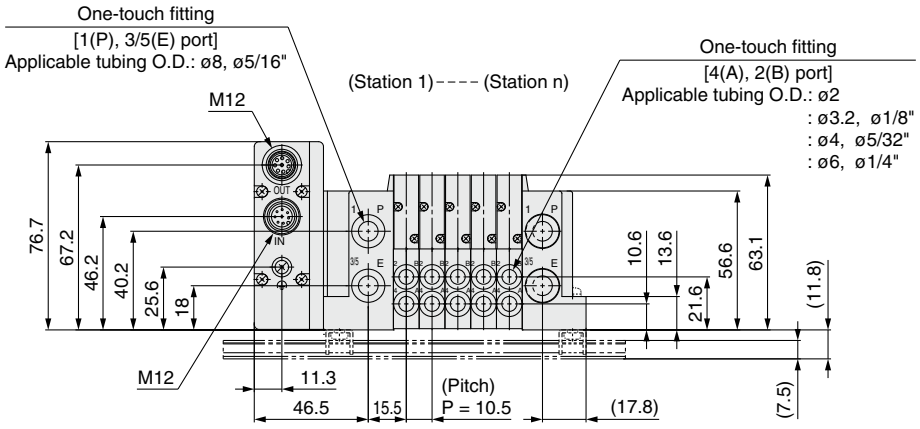

*1 Refer to page 157 for dimensions of the external pilot, silencer, elbow fittings, and slide locking manual override.
* These figures show the "SS5Y3-10SA3N-05D-C6."
* Refer to page 162 for dimensions of A or B port top-ported type.

L: Dimensions

n: Stations

L \ n	2	3	4	5	6	7	8	9	10	11	12	13	14	15	16
L1	103.7	114.2	124.7	135.2	145.7	156.2	166.7	177.2	187.7	198.2	208.7	219.2	229.7	240.2	250.7
L2	63	73.5	84	94.5	105	115.5	126	136.5	147	157.5	168	178.5	189	199.5	210
L3	135.5	148	148	160.5	173	185.5	198	210.5	223	223	235.5	248	260.5	273	285.5
L4	125	137.5	137.5	150	162.5	175	187.5	200	212.5	212.5	225	237.5	250	262.5	275
L5	16	17	11.5	12.5	13.5	14.5	15.5	16.5	17.5	12.5	13.5	14.5	15.5	16.5	17.5

L \ n	17	18	19	20	21	22	23	24
L1	261.2	271.7	282.2	292.7	303.2	313.7	324.2	334.7
L2	220.5	231	241.5	252	262.5	273	283.5	294
L3	285.5	298	310.5	323	335.5	348	348	360.5
L4	275	287.5	300	312.5	325	337.5	337.5	350
L5	12	13	14	15	16	17	12	13

Dimensions: SY5000 Series

SS5Y5-10SA3N- Stations (U C4, N3 / D-C6, N7 / B C8, N9) **(D)**

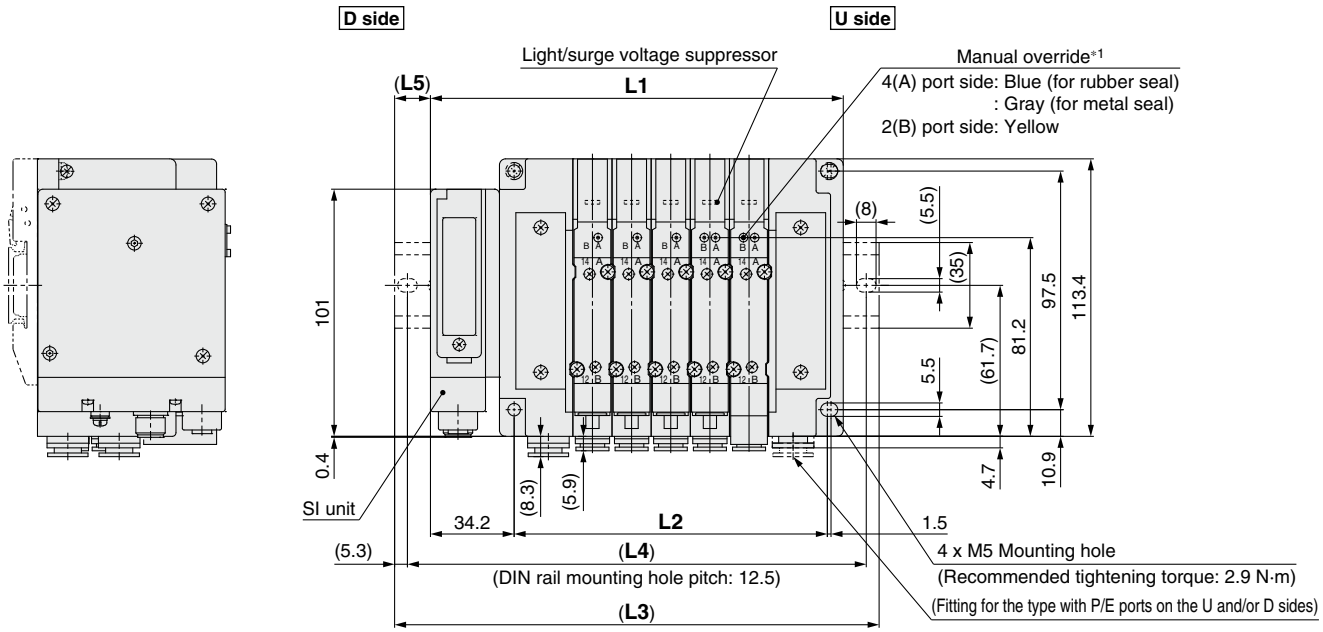

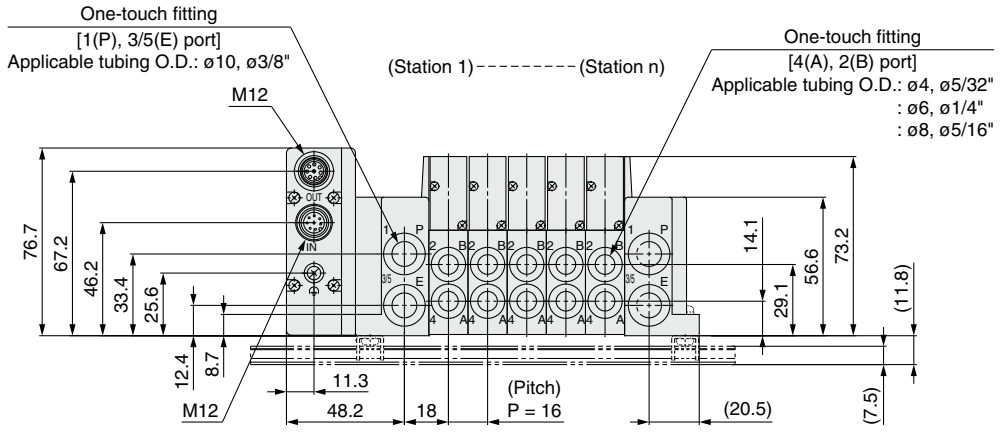

*1 Refer to page 158 for dimensions of the external pilot, silencer, elbow fittings, and slide locking manual override.
* These figures show the "SS5Y5-10SA3N-05D-C8."
* Refer to page 163 for dimensions of A or B port top-ported type.

L: Dimensions n: Stations

L \ n	2	3	4	5	6	7	8	9	10	11	12	13	14	15	16
L1	120.7	136.7	152.7	168.7	184.7	200.7	216.7	232.7	248.7	264.7	280.7	296.7	312.7	328.7	344.7
L2	80	96	112	128	144	160	176	192	208	224	240	256	272	288	304
L3	148	160.5	185.5	198	210.5	235.5	248	260.5	273	298	310.5	323	348	360.5	373
L4	137.5	150	175	187.5	200	225	237.5	250	262.5	287.5	300	312.5	337.5	350	362.5
L5	13.5	12	16.5	14.5	13	17.5	15.5	14	12	16.5	15	13	17.5	16	14

L \ n	17	18	19	20	21	22	23	24
L1	360.7	376.7	392.7	408.7	424.7	440.7	456.7	472.7
L2	320	336	352	368	384	400	416	432
L3	385.5	410.5	423	435.5	448	473	485.5	498
L4	375	400	412.5	425	437.5	462.5	475	487.5
L5	12.5	17	15	13.5	11.5	16	14.5	12.5

Plug-in Connector Connecting Base | Type 10/Side Ported | EX500 (128 Points)

Dimensions: SY7000 Series

SS5Y7-10SA3N-[Stations][U/D/B]-[C6, N7 / C8, N9 / C10, N11 / C12] (D)

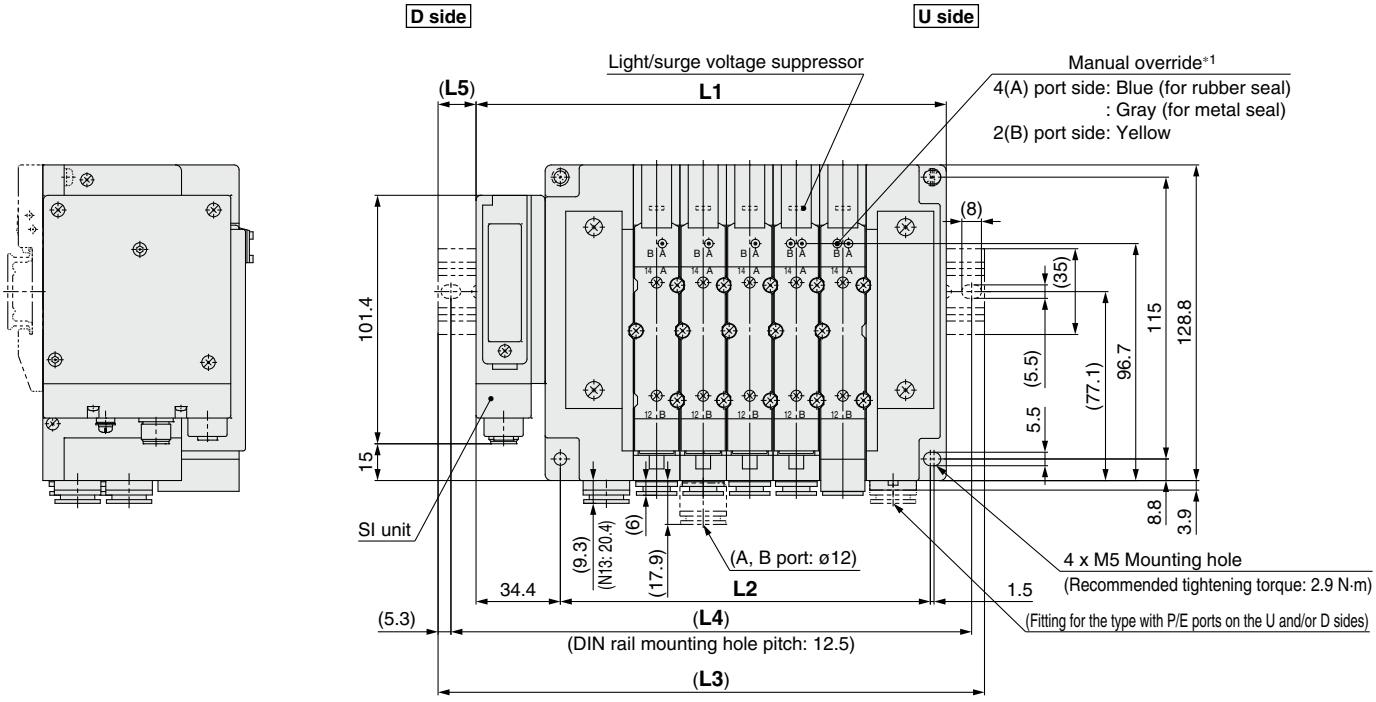

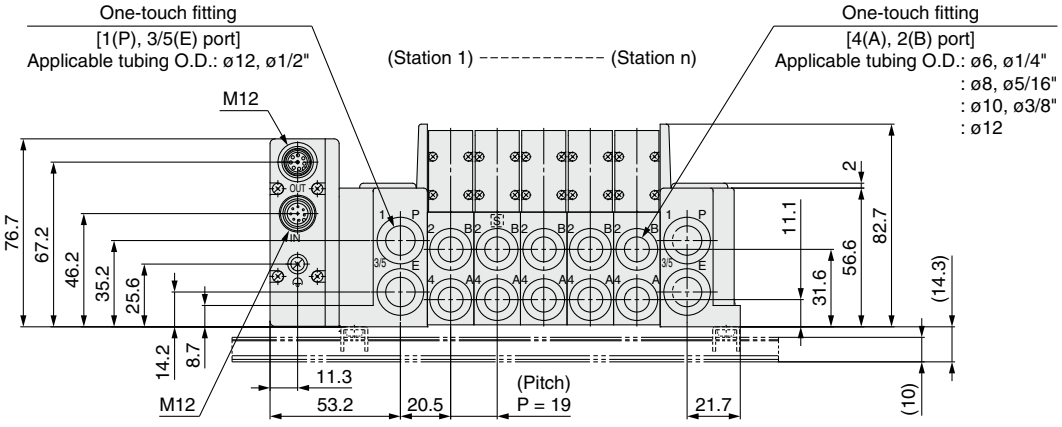

*1 Refer to page 159 for dimensions of the external pilot, silencer, elbow fittings, and slide locking manual override.
* These figures show the "SS5Y7-10SA3N-05D-C10."
* Refer to page 164 for dimensions of A or B port top-ported type.

L: Dimensions

n: Stations

L \ n	2	3	4	5	6	7	8	9	10	11	12	13	14	15	16
L1	134.9	153.9	172.9	191.9	210.9	229.9	248.9	267.9	286.9	305.9	324.9	343.9	362.9	381.9	400.9
L2	94	113	132	151	170	189	208	227	246	265	284	303	322	341	360
L3	160.5	185.5	198	223	235.5	260.5	273	298	310.5	335.5	348	373	398	410.5	435.5
L4	150	175	187.5	212.5	225	250	262.5	287.5	300	325	337.5	362.5	387.5	400	425
L5	13	16	12.5	15.5	12.5	15.5	12	15	12	15	11.5	14.5	17.5	14.5	17.5

L \ n	17	18	19	20	21	22	23	24
L1	419.9	438.9	457.9	476.9	495.9	514.9	533.9	552.9
L2	379	398	417	436	455	474	493	512
L3	448	473	485.5	510.5	523	548	560.5	585.5
L4	437.5	462.5	475	500	512.5	537.5	550	575
L5	14	17	14	17	13.5	16.5	13.5	16.5

Type 10
Side Ported

Type 11
Bottom Ported

Plug-in Connector Connecting Base

EX500 Gateway Decentralized System (64 Points)

SY3000/5000/7000 Series

How to Order Manifolds

Refer to pages 160 (SY5000) and 161 (SY7000) for the dimensions of Type 11/Bottom-ported type.

SS5Y 3 – 10 S A2 – 05 U □ – C6 □

❶ ❷ ❸ ❹ ❺ ❻ ❼ ❽

❶ Series

3	SY3000
5	SY5000
7	SY7000

∗ For mixed mounting, refer to page 165 and later.

❷ Type

10	Side ported
11	Bottom ported∗1

∗1 The SY5000 manifold base is used for the bottom-ported SY3000. When ordering, refer to the "Plug-in Mixed Mounting Type Manifold" (from page 165).

∗ When mixing top-ported configurations, select from those listed on page 112. In such cases, use caution as there is also output on the A and B ports on the base side. Specify on the manifold specification sheet if plugs are required for the A and B ports on the base side.

❸ SI unit (Number of outputs, Output polarity, Max. number of valve stations)

0	Without SI unit
A2	16 outputs, Positive common∗1, 2 to 8 stations (16 stations)∗2
A2N	16 outputs, Negative common∗1, 2 to 8 stations (16 stations)∗2

∗1 Ensure a match with the common specification of the valve to be used.

∗2 ( ): Maximum number of stations for mixed single and double wiring

❹ Valve stations

	Stations	Note
02	2 stations	Double wiring∗1
⋮	⋮	
08	8 stations	
02	2 stations	Specified layout∗2 (Up to 16 solenoids available)
⋮	⋮	
16	16 stations	

∗1 Double wiring: 2-position single, double, 3-position, and 4-position valves can be used on all manifold stations. Use of a 2-position single solenoid will result in an unused control signal. If this is not desired, order with a specified layout.

∗2 Specified layout: Indicate the wiring specifications on the manifold specification sheet. (Note that 2-position double, 3-position, and 4-position valves cannot be used where single wiring has been specified.)

∗ When the product without the SI unit (S0) is selected, note the maximum number of solenoids of the SI unit that will be mounted. If the layout is specified, indicate it on the manifold specification sheet.

∗ This also includes the number of the blanking plate assembly.

❺ P, E port entry

U	U side (2 to 10 stations)
D	D side (2 to 10 stations)
B	Both sides (2 to 16 stations)

❻ SUP/EXH block assembly

Nil	Internal pilot
S	Internal pilot, Built-in silencer
R	External pilot

∗ 3/5(E) port is plugged for the built-in silencer type.

∗ When the built-in silencer type is used, keep the exhaust port from coming into direct contact with water or other liquids.

How to Order Manifold Assembly

Example (SS5Y3-10SA2-□)

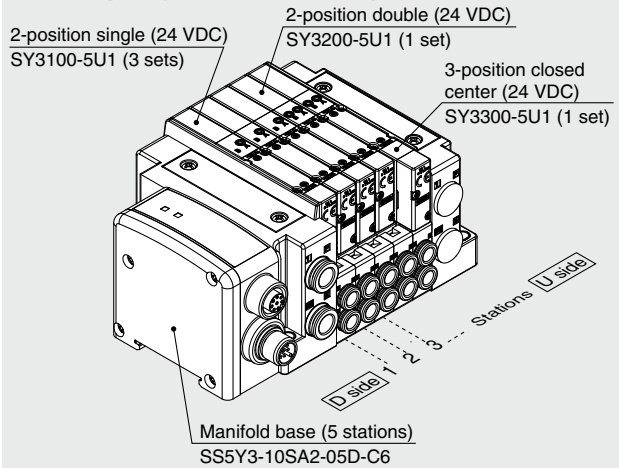

SS5Y3-10SA2-05D-C6 ··· 1 set (Type 10 5-station manifold base part no.)
∗SY3100-5U1····· 3 sets (2-position single part no.)
∗SY3200-5U1····· 1 set (2-position double part no.)
∗SY3300-5U1····· 1 set (3-position closed center part no.)
The asterisk denotes the symbol for the assembly. Prefix it to the part numbers of the valve, etc.

- For the valve arrangement, the valve closest to the D side is considered the 1st station.
- Under the manifold part number, state the valves to be mounted in order starting with the 1st station as shown in the figure above. If the arrangement becomes too complicated, specify the details on a manifold specification sheet.

∗ A separate GW unit and communication cable are required.

For details on the EX500 Gateway Type Serial Transmission System, refer to the **Web Catalog** and the Operation Manual. For the part numbers of the SI units to be mounted, refer to page 189. Please download the Operation Manual via the SMC website, https://www.smcworld.com

SMC

❼ A, B port size (Metric/One-touch fitting)

			A, B port	Type 10/Side ported			Type 11/Bottom ported	
				SY3000	SY5000	SY7000	SY5000	SY7000
C2	Straight		ø2	●	—	—	—	—
C3			ø3.2	●	—	—	—	—
C4			ø4	●	●	—	●	—
C6			ø6	●	●	●	●	●
C8			ø8	—	●	●	●	●
C10			ø10	—	—	●	—	●
C12			ø12	—	—	●	—	●
CM*1			Mixed sizes	●	●	●	●	●
L4	Elbow*2	Upward	ø4	●	●	—	—	—
L6			ø6	●	●	●	—	—
L8			ø8	—	●	●	—	—
L10			ø10	—	—	●	—	—
L12			ø12	—	—	●	—	—
B4		Downward	ø4	●	●	—	—	—
B6			ø6	●	●	●	—	—
B8			ø8	—	●	●	—	—
B10			ø10	—	—	●	—	—
B12			ø12	—	—	●	—	—
LM*1			Mixed sizes	●	●	●	—	—
P, E port*3 (One-touch fittings)				ø8	ø10	ø12	ø10	ø12

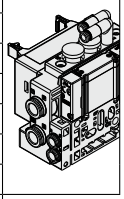
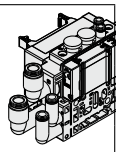
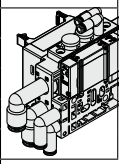

A, B port size (Inch/One-touch fitting)

			A, B port	Type 10/Side ported			Type 11/Bottom ported	
				SY3000	SY5000	SY7000	SY5000	SY7000
N1	Straight		ø1/8"	●	—	—	—	—
N3			ø5/32"	●	●	—	●	—
N7			ø1/4"	●	●	●	●	●
N9			ø5/16"	—	●	●	●	●
N11			ø3/8"	—	—	●	—	●
CM*1			Mixed sizes	●	●	●	●	●
LN3	Elbow*2	Upward	ø5/32"	●	—	—	—	—
LN7			ø1/4"	●	●	—	—	—
LN9			ø5/16"	—	●	—	—	—
LN11			ø3/8"	—	—	●	—	—
BN3		Downward	ø5/32"	●	—	—	—	—
BN7			ø1/4"	●	●	—	—	—
BN9			ø5/16"	—	●	—	—	—
BN11			ø3/8"	—	—	●	—	—
LM*1			Mixed sizes	●	●	●	—	—
P, E port*3 (One-touch fittings)				ø5/16"	ø3/8"	ø1/2"	ø3/8"	ø1/2"

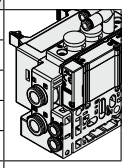
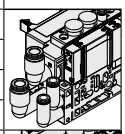
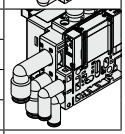

*1 Indicate the sizes on the manifold specification sheet.
*2 To avoid interference with the body or piping, select a downward elbow port when mounting the optional spacer assembly (pages 204 to 206).
*3 The direction of P, E port fittings is the same as for the A, B port. If selecting "LM," indicate it on the manifold specification sheet for the P, E port fitting direction.

❽ Mounting and Option

	Mounting	Option	
		Name plate	Station number
Nil	Direct mounting	—	—
AA		●	●
BA		●	—
D□*1	DIN rail mounting	—	—
A□*1		●	●
B□*1		●	—

*1 Refer to "DIN Rail Option" below.
* Select the direct mounting type for Type 11 (Bottom ported).

DIN Rail Option

Nil	With DIN bracket, DIN rail with standard length
0	With DIN bracket, without DIN rail
3*1	With DIN bracket, DIN rail for 3 stations
⋮	⋮
16*1	With DIN bracket, DIN rail for 16 stations

*1 Specify a longer rail than the length of valve stations.
* If the DIN rail must be mounted without an SI unit, select "D0" and order the DIN rail separately. Refer to L3 of the dimensions for the DIN rail length. Refer to page 203 for the DIN rail part number.
* Refer to page 295 for the fixation of DIN rail mounting type manifold.

Protective class class Ⅲ (Mark: ⧫)

How to Order Valves (With mounting screw)

Refer to page 15 for valve specifications.

SY 3 1 0 0 □ □ □ □ – 5 □ □ 1 – □

❶ ❷ ❸ ❹ ❺ ❻ ❼ ❽ ❾ ❿ ⓫

❸ Base mounted

❶ Series

3	SY3000
5	SY5000
7	SY7000

❷ Type of actuation

1	2-position	Single
2		Double
3	3-position	Closed center
4		Exhaust center
5		Pressure center
A*1	4-position dual 3-port	N.C./N.C.
B*1		N.O./N.O.
C*1		N.C./N.O.

*1 Only the rubber seal type is available for the 4-position dual 3-port valve.

❸ Seal type

0	Rubber seal
1	Metal seal

❹ Pilot type

Nil	Internal pilot
R	External pilot

❺ Back pressure check valve (Built-in valve type)

Nil	None
H	Built-in

* Only the rubber seal type is available. A manifold installed type is available if a back pressure check valve with a metal seal is required. Refer to page 212 for ordering examples. However, it is not recommended to use the built-in valve type and the manifold installed type at the same time because it will reduce the flow.
* The built-in valve type back pressure check valve is not available for the 3-position type or the SY7000.

❻ Pilot valve option

Nil	Standard (0.7 MPa)
B	Quick response type (0.7 MPa)
K*1	High pressure type (1.0 MPa)

*1 Only the metal seal type is available for the high pressure type.

❼ Coil type

Nil	Standard
T	With power saving circuit (Continuous duty type)

* Be sure to select the power saving circuit type if the valve is to be continuously energized for long periods of time.
* Be careful of the energizing time when the power saving circuit is selected. Refer to page 292 for details.

❽ Rated voltage

5	24 VDC

❾ Light/surge voltage suppressor and common specification

Symbol	With light	Surge voltage suppressor	Common specification
R	—	●	Non-polar
U	●		
S	—		Positive common
Z	●		
NS	—		Negative common
NZ	●		

* Only "Z" and "NZ" are available with a power saving circuit. Select "R," "U," "S," or "Z" for the valve when the SI unit specification is A2 (positive common). Select "R," "U," "NS," or "NZ" for the valve when the SI unit specification is A2N (negative common).

❿ Manual override

Nil: Non-locking push type	**D**: Push-turn locking slotted type
E: Push-turn locking lever type	**F**: Slide locking type

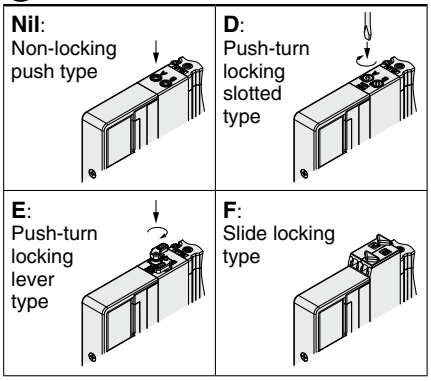

* Refer to page 34 for the safety slide locking manual override.

⓫ Type of mounting screw

Nil	Round head combination screw
B	Hexagon socket head cap screw
K	Round head combination screw (Drop prevention type)
H	Hexagon socket head cap screw (Drop prevention type)

* For "K" and "H," the valve body cover has a drop prevention construction to stop the mounting screws from falling out when the valve is removed for maintenance, etc.
* **When ordering a valve individually, the base gasket is not included.**
  Since the base gasket is attached to the manifold, please order the base gasket separately if it is needed for maintenance. Refer to page 198 for base gasket and mounting screw part numbers.
* "B" and "H" cannot be selected for the individual SUP/EXH spacer assembly, interface regulator, or double check spacer assembly with residual pressure release valve.

⚠ Protective class class Ⅲ (Mark: Ⅲ)

Plug-in Connector Connecting Base | Type 10/Side Ported | EX500 (64 Points)

Dimensions: SY3000 Series

SS5Y3-10SA2- Stations U/D/B - C2 / C3, N1 / C4, N3 / C6, N7 (D)

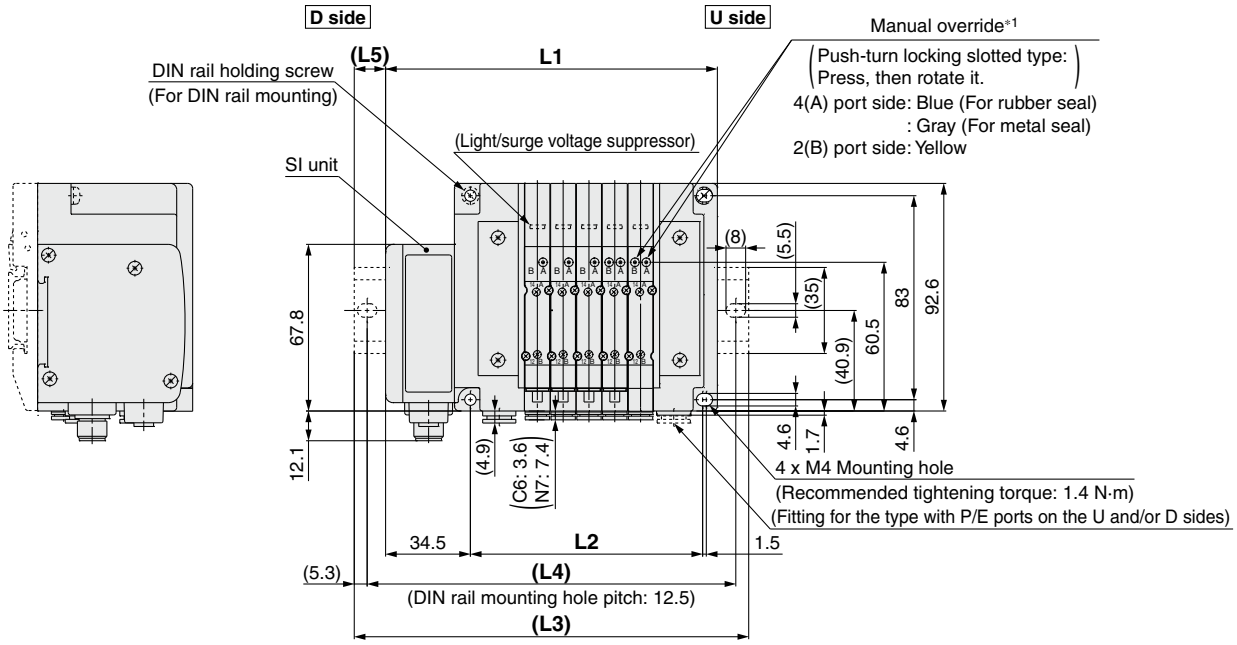

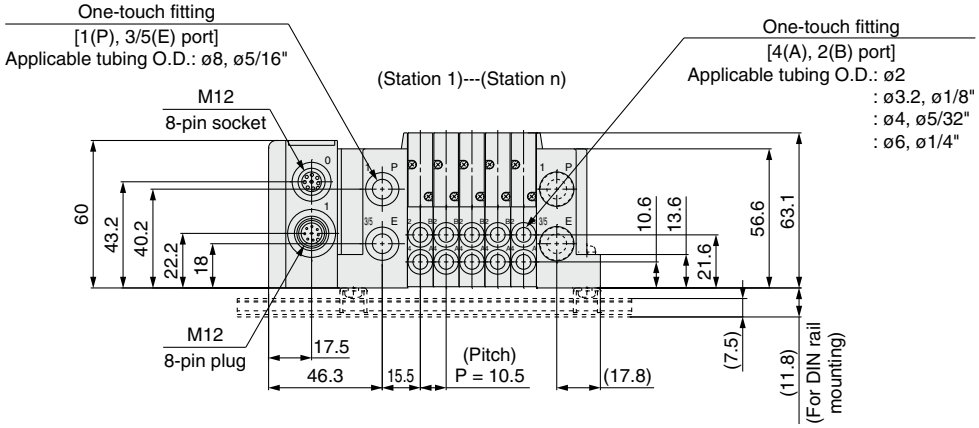

*1 Refer to page 157 or dimensions of the external pilot, silencer, elbow fittings, and slide locking manual override.
* These figures show the "SS5Y3-10SA2-05D-C6."
* Refer to page 162 for dimensions of A or B port top-ported type.

n: Stations	2	3	4	5	6	7	8	9	10	11	12	13	14	15	16
L1	103.5	114	124.5	135	145.5	156	166.5	177	187.5	198	208.5	219	229.5	240	250.5
L2	63	73.5	84	94.5	105	115.5	126	136.5	147	157.5	168	178.5	189	199.5	210
L3	135.5	148	148	160.5	173	185.5	198	210.5	223	223	235.5	248	260.5	273	285.5
L4	125	137.5	137.5	150	162.5	175	187.5	200	212.5	212.5	225	237.5	250	262.5	275
L5	16	17	12	13	14	15	16	17	18	12.5	13.5	14.5	15.5	16.5	17.5

Dimensions: SY5000 Series

Plug-in Connector Connecting Base | Type 10/Side Ported | EX500 (64 Points)

SS5Y5-10SA2-[Stations] [U C4, N3 / D C6, N7 / B C8, N9] (D)

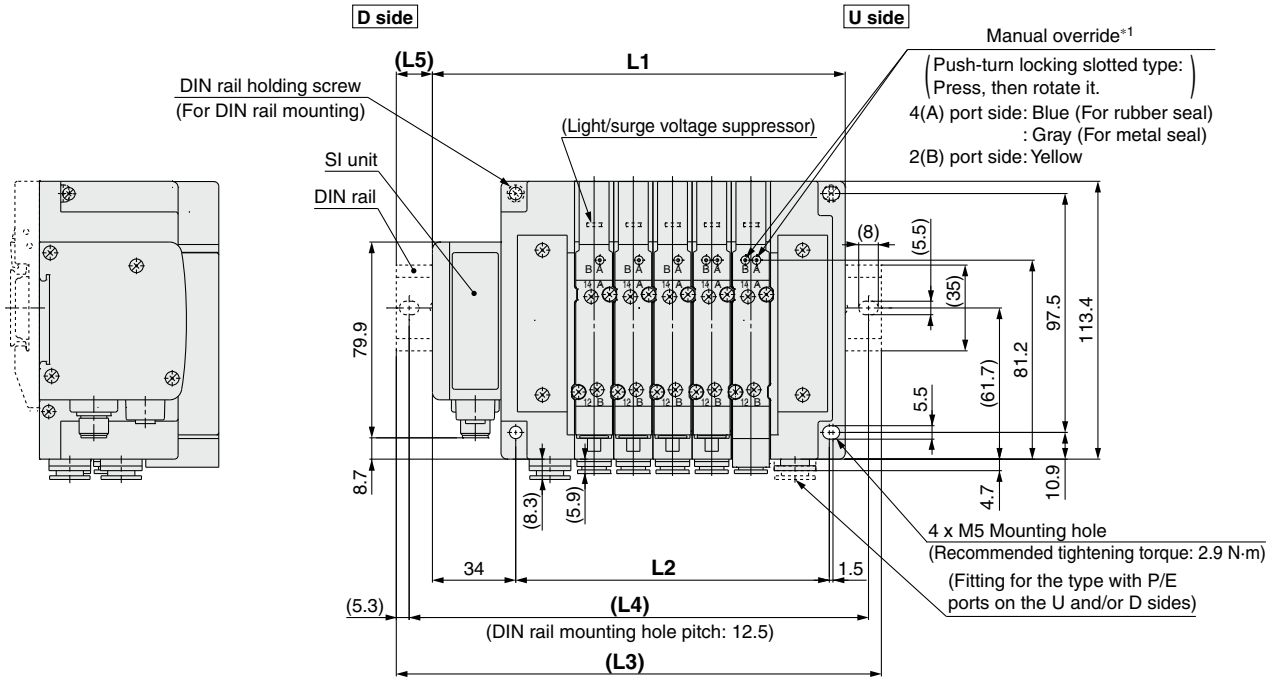

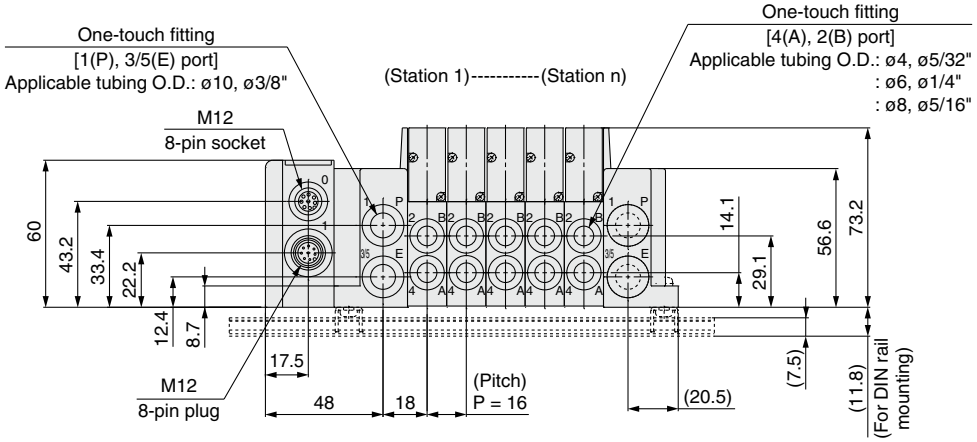

*1 Refer to page 158 for dimensions of the external pilot, silencer, elbow fittings, and slide locking manual override.
* These figures show the "SS5Y5-10SA2-05D-C8."
* Refer to page 163 for dimensions of A or B port top-ported type.

n: Stations	2	3	4	5	6	7	8	9	10	11	12	13	14	15	16
L1	120.5	136.5	152.5	168.5	184.5	200.5	216.5	232.5	248.5	264.5	280.5	296.5	312.5	328.5	344.5
L2	80	96	112	128	144	160	176	192	208	224	240	256	272	288	304
L3	148	160.5	185.5	198	210.5	235.5	248	260.5	273	298	310.5	323	348	360.5	373
L4	137.5	150	175	187.5	200	225	237.5	250	262.5	287.5	300	312.5	337.5	350	362.5
L5	14	12	16.5	15	13	17.5	16	14	12.5	17	15	13.5	18	16	14.5

Plug-in Connector Connecting Base | Type 10/Side Ported | EX500 (64 Points)

Dimensions: SY7000 Series

SS5Y7-10SA2- Stations **U/D/B -** C6, N7 / C8, N9 / C10, N11 / C12 **(D)**

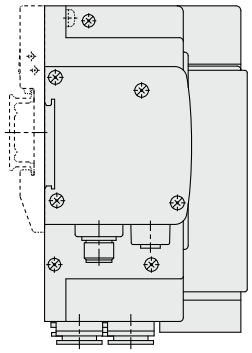

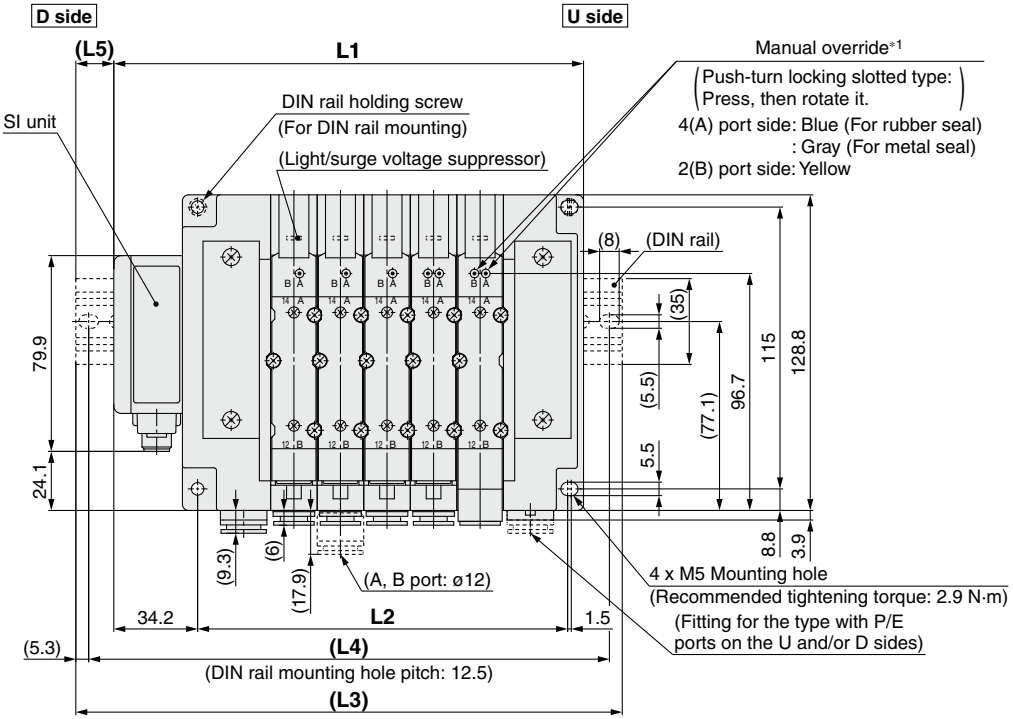

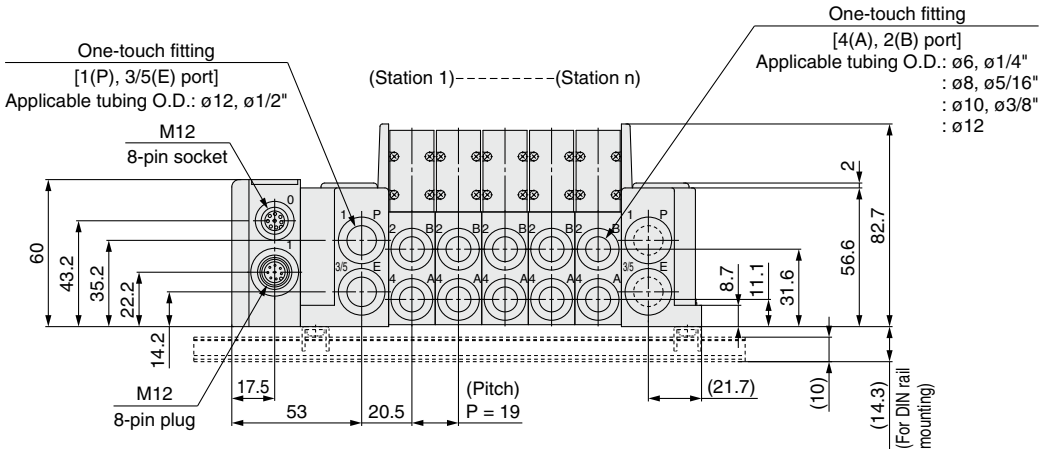

*1 Refer to page 159 for dimensions of the external pilot, silencer, elbow fittings, and slide locking manual override.
* These figures show the "SS5Y7-10SA2-05D-C10."
* Refer to page 164 for dimensions of A or B port top-ported type.

n: Stations	2	3	4	5	6	7	8	9	10	11	12	13	14	15	16
L1	134.7	153.7	172.7	191.7	210.7	229.7	248.7	267.7	286.7	305.7	324.7	343.7	362.7	381.7	400.7
L2	94	113	132	151	170	189	208	227	246	265	284	303	322	341	360
L3	160.5	185.5	198	223	235.5	260.5	273	298	310.5	335.5	348	373	398	410.5	435.5
L4	150	175	187.5	212.5	225	250	262.5	287.5	300	325	337.5	362.5	387.5	400	425
L5	13	16	12.5	15.5	12.5	15.5	12	15	12	15	11.5	14.5	17.5	14.5	17.5

Plug-in Connector Connecting Base

EX500 Gateway Decentralized System 2 (128 Points)

Type 12 Top Ported

SY3000/5000/7000 Series

How to Order Manifolds

SS5Y 3 – 12S A3N – 05 U □ – □ □

❶ ❷ ❸ ❹ ❺ ❻ ❼

Refer to pages 162 to 164 for the dimensions of Type 12/Top-ported type.

❶ Series

3	SY3000
5	SY5000
7	SY7000

∗ For mixed mounting, refer to page 165 and later.

❷ SI unit (Number of outputs, Output polarity, Max. number of valve stations)

0	Without SI unit
A3N	32 outputs∗1∗4, 2 to 16 stations (24 stations∗3), Negative common∗2

∗1 16 outputs can be set by switching the built-in setting switch.
∗2 Ensure a match with the common specification of the valve.
∗3 ( ): Maximum number of stations for mixed single and double wiring
∗4 When using the SI unit with 32 outputs, use the GW unit compatible with the EX500 Gateway Decentralized System 2 (128 points).

❸ Valve stations

	Stations	Note
02	2 stations	Double wiring∗1
⋮	⋮	
16	16 stations	
02	2 stations	Specified layout∗2 (Up to 32 solenoids available)
⋮	⋮	
24	24 stations	

∗1 Double wiring: 2-position single, double, 3-position, and 4-position valves can be used on all manifold stations. Use of a 2-position single solenoid will result in an unused control signal. If this is not desired, order with a specified layout.
∗2 Specified layout: Indicate the wiring specifications on the manifold specification sheet. (Note that 2-position double, 3-position, and 4-position valves cannot be used where single wiring has been specified.)
∗ When the product without the SI unit (S0) is selected, note the maximum number of solenoids of the SI unit that will be mounted. If the layout is specified, indicate it on the manifold specification sheet.
∗ This also includes the number of the blanking plate assembly.

❹ P, E port entry

U∗1	U side (2 to 10 stations)
D∗1	D side (2 to 10 stations)
B	Both sides (2 to 24 stations)

∗1 For type “S”, SUP/EXH block assembly with a built-in silencer, choose U or D for P, E port entry.

❺ SUP/EXH block assembly

Nil	Internal pilot
S∗1	Internal pilot, Built-in silencer∗2
R	External pilot

∗1 For type “S”, SUP/EXH block assembly with a built-in silencer, choose U or D for P, E port entry. 3/5(E) port is plugged. The silencer exhaust port is located on the opposite side of the P and E port entry. (Example: When the P and E port entry is on the D side, the silencer exhaust port is on the U side.)
∗2 When the built-in silencer type is used, keep the exhaust port from coming into direct contact with water or other liquids.

How to Order Manifold Assembly

Example

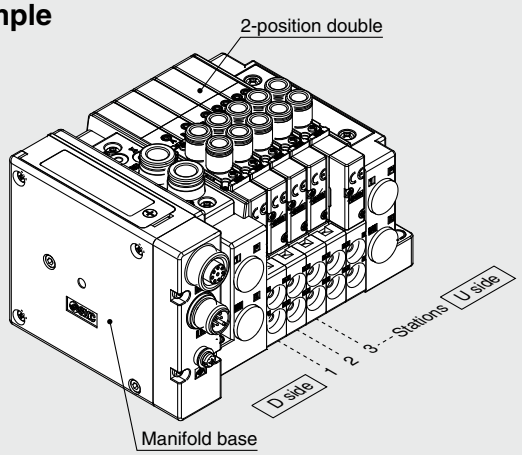

SS5Y3-12SA3N-05D·····1 set (Manifold base part number)
∗ SY3230-5U1-C6·····5 sets (2-position double part number)
The asterisk denotes the symbol for the assembly. Prefix it to the part numbers of the valve, etc.

- For the valve arrangement, the valve closest to the D side is considered the 1st station.
- Under the manifold base part number, state the valves to be mounted in order starting with the 1st station as shown in the figure above. If the arrangement becomes too complicated, specify the details on a manifold specification sheet.

❻ P, E port size (One-touch fittings)

	SY3000	SY5000	SY7000
Nil	ø8	ø10	ø12
N∗1	ø5/16"	ø3/8"	ø1/2"

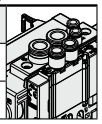

∗1 For N, sizes are in inches.

❼ Mounting

Nil	Direct mounting
D	With DIN bracket, DIN rail with standard length
D0	With DIN bracket, without DIN rail
D3∗1	With DIN bracket, DIN rail for 3 stations
⋮	⋮
D24∗1	With DIN bracket, DIN rail for 24 stations

∗1 Specify a longer rail than the length of valve stations.
∗ If the DIN rail must be mounted without an SI unit, select “D0.” Then, refer to L3 of the dimensions for the DIN rail length and order separately. Refer to page 203 for the DIN rail part number.
∗ Refer to page 295 for the fixation of DIN rail mounting type manifold.

∗ A separate GW unit and communication cable are required.

For details on the EX500 Gateway Type Serial Transmission System, refer to the **Web Catalog** and the Operation Manual. For the part numbers of the SI units to be mounted, refer to page 188. Please download the Operation Manual via the SMC website, https://www.smcworld.com

How to Order Valves (With mounting screw)

Refer to page 15 for valve specifications.

SY 3 1 3 0 □ □ □ □ – 5 □ □ 1 – C6 □ – □

❶ ❷ ❸ ❹ ❺ ❻ ❼ ❽ ❾ ❿ ⓫ ⓬ ⓭

❸ Top ported

❶ Series

3	SY3000
5	SY5000
7	SY7000

❷ Type of actuation

1	2-position	Single
2		Double
3	3-position	Closed center
4		Exhaust center
5		Pressure center
A∗1	4-position dual 3-port valve	N.C./N.C.
B∗1		N.O./N.O.
C∗1		N.C./N.O.

∗1 Select the rubber seal type for the 4-position dual 3-port valve.

❸ Seal type

0	Rubber seal
1	Metal seal

❹ Pilot type

Nil	Internal pilot
R	External pilot

❺ Back pressure check valve (Built-in valve type)

Nil	None
H∗1	Built-in

∗1 Select the rubber seal type when the back pressure check valve is built-in. A manifold installed type is available if a back pressure check valve with a metal seal is required. Refer to page 212 for ordering examples. However, it is not recommended to use the built-in valve type and the manifold installed type at the same time because it will reduce the flow.

∗ Select "Nil" for the 3-position type or the SY7000.

❻ Pilot valve option

Nil	Standard (0.7 MPa)
B	Quick response type (0.7 MPa)
K∗1	High pressure type (1.0 MPa)

∗1 Select the metal seal type for the high pressure type.

❼ Coil type

Nil	Standard
T	With power saving circuit (Continuous duty type)∗1∗2

∗1 Be sure to select the power saving circuit type if the valve is to be continuously energized for long periods of time.

∗2 Be careful of the energizing time when the power saving circuit is selected. Refer to page 292 for details.

❽ Rated voltage

5	24 VDC

❾ Light/surge voltage suppressor and common specification

	With light	Surge voltage suppressor	Common specification
R	—	●	Non-polar
U	●		
NS	—		Negative common
NZ	●		

∗ Select "NZ" for models with a power saving circuit.

❿ Manual override

Nil	D
Non-locking push type 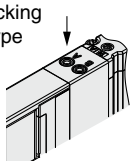	Push-turn locking slotted type 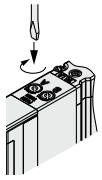
E	**F**
Push-turn locking lever type 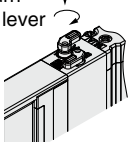	Slide locking type 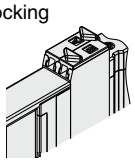

∗ Refer to page 34 for the safety slide locking manual override.

⓫ A, B port size

Thread piping

	Port size	SY3000	SY5000	SY7000
M5	M5 x 0.8	●	—	—
01	1/8	—	●	—
02	1/4	—	—	●

One-touch fitting (Metric)

	A, B port	SY3000	SY5000	SY7000
C2	ø2	●	—	—
C3	ø3.2	●	—	—
C4	ø4	●	●	—
C6	ø6	●	●	●
C8	ø8	—	●	●
C10	ø10	—	—	●
C12	ø12	—	—	●

One-touch fitting (Inch)

	A, B port	SY3000	SY5000	SY7000
N1	ø1/8"	●	—	—
N3	ø5/32"	●	●	—
N7	ø1/4"	●	●	●
N9	ø5/16"	—	●	●
N11	ø3/8"	—	—	●

⓬ A, B port thread type

Nil	Rc
F	G
N	NPT
T	NPTF

∗ Select "Nil" for M5.

⓭ Type of mounting screw

Nil	Round head combination screw
B	Hexagon socket head cap screw
K	Round head combination screw (Drop prevention type∗1)
H	Hexagon socket head cap screw (Drop prevention type∗1)

∗1 For "K" and "H," the valve body cover has a drop prevention construction to stop the mounting screws from falling out when the valve is removed for maintenance, etc.

∗ **When ordering a valve individually, the base gasket is not included.**
Since the base gasket is attached to the manifold, please order the base gasket separately if it is needed for maintenance. Refer to page 198 for base gasket and mounting screw part numbers.

∗ Select "Nil" or "K" for the optional individual SUP/EXH spacer assembly or interface regulator.

⚠ Protective class class Ⅲ (Mark: ⧫)

Plug-in Connector Connecting Base

EX500 Gateway Decentralized System (64 Points)

Type 12
Top Ported

SY3000/5000/7000 Series

How to Order Manifolds

SS5Y 3 – 12S A2 – 05 U □ – □ □
❶ ❷ ❸ ❹ ❺ ❻ ❼

Refer to pages 162 to 164 for the dimensions of Type 12/Top-ported type.

❶ Series

3	SY3000
5	SY5000
7	SY7000

∗ For mixed mounting, refer to page 165 and later.

❷ SI unit (Number of outputs, Output polarity, Max. number of valve stations)

0	Without SI unit
A2	16 outputs, Positive common∗1, 2 to 8 stations (16 stations)∗2
A2N	16 outputs, Negative common∗1, 2 to 8 stations (16 stations)∗2

∗1 Ensure a match with the common specification of the valve to be used.
∗2 ( ): Maximum number of stations for mixed single and double wiring

❹ P, E port entry

U∗1	U side (2 to 10 stations)
D∗1	D side (2 to 10 stations)
B	Both sides (2 to 16 stations)

∗1 ❺For type "S", SUP/EXH block assembly with a built-in silencer, choose U or D for P, E port entry.

❺ SUP/EXH block assembly

Nil	Internal pilot
S	Internal pilot, Built-in silencer
R	External pilot

∗ The P and E ports are only available on the U and D sides for the built-in silencer type. 3/5(E) port is plugged. The silencer exhaust port is located on the opposite side of the P and E port entry. (Example: When the P and E port entry is on the D side, the silencer exhaust port is on the U side.)
∗ When the built-in silencer type is used, keep the exhaust port from coming into direct contact with water or other liquids.

❸ Valve stations

Symbol	Stations	Note
02	2 stations	Double wiring∗1
⋮	⋮	
08	8 stations	
02	2 stations	Specified layout∗2 (Up to 16 solenoids available)
⋮	⋮	
16	16 stations	

∗1 Double wiring: 2-position single, double, 3-position, and 4-position valves can be used on all manifold stations.
Use of a 2-position single solenoid will result in an unused control signal. If this is not desired, order with a specified layout.
∗2 Specified layout: Indicate the wiring specifications on the manifold specification sheet. (Note that 2-position double, 3-position, and 4-position valves cannot be used where single wiring has been specified.)
∗ When the product without the SI unit (S0) is selected, note the maximum number of solenoids of the SI unit that will be mounted. If the layout is specified, indicate it on the manifold specification sheet.
∗ This also includes the number of the blanking plate assembly.

How to Order Manifold Assembly

Example (SS5Y3-12SA2-□)

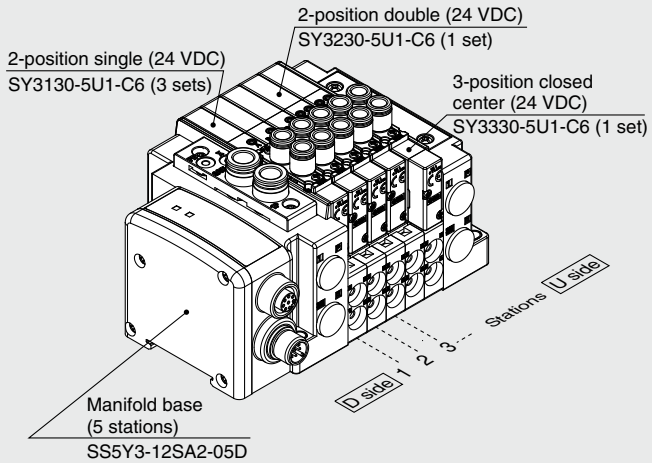

SS5Y3-12SA2-05D ··· 1 set (Type 12 5-station manifold base part no.)
∗SY3130-5U1-C6 ····· 3 sets (2-position single part no.)
∗SY3230-5U1-C6 ····· 1 set (2-position double part no.)
∗SY3330-5U1-C6 ····· 1 set (3-position closed center part no.)
→ The asterisk denotes the symbol for the assembly. Prefix it to the part numbers of the valve, etc.

- For the valve arrangement, the valve closest to the D side is considered the 1st station.
- Under the manifold part number, state the valves to be mounted in order starting with the 1st station as shown in the figure above. If the arrangement becomes too complicated, specify the details on a manifold specification sheet.

❻ P, E port size (One-touch fittings)

Symbol	SY3000	SY5000	SY7000
Nil	ø8	ø10	ø12
N	ø5/16"	ø3/8"	ø1/2"

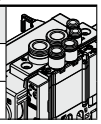

∗ For N, sizes are in inches.

❼ Mounting

Nil	Direct mounting
D	With DIN bracket, DIN rail with standard length
D0	With DIN bracket, without DIN rail
D3∗1	With DIN bracket, DIN rail for 3 stations
⋮	⋮
D16∗1	With DIN bracket, DIN rail for 16 stations

∗1 Specify a longer rail than the length of valve stations.
∗ If the DIN rail must be mounted without an SI unit, select "D0." Then, refer to L3 of the dimensions for the DIN rail length and order separately. Refer to page 203 for the DIN rail part number.
∗ Refer to page 295 for the fixation of DIN rail mounting type manifold.

∗ A separate GW unit and communication cable are required.

For details on the EX500 Gateway Type Serial Transmission System, refer to the **Web Catalog** and the Operation Manual. For the part numbers of the SI units to be mounted, refer to page 189. Please download the Operation Manual via the SMC website, https://www.smcworld.com

How to Order Valves (With mounting screw)

Refer to page 15 for valve specifications.

SY [3][1][3][0][ ][ ][ ][ ]-[5][ ][ ] 1 -[C6][ ]-[ ]

❶ ❷ ❸ ❹ ❺ ❻ ❼ ❽ ❾ ❿ ⓫ ⓬ ⓭

❸ Top ported

❶ Series

3	SY3000
5	SY5000
7	SY7000

❷ Type of actuation

1	2-position	Single
2		Double
3	3-position	Closed center
4		Exhaust center
5		Pressure center
A*1	4-position dual 3-port	N.C./N.C.
B*1		N.O./N.O.
C*1		N.C./N.O.

*1 Only the rubber seal type is available for the 4-position dual 3-port valve.

❸ Seal type

0	Rubber seal
1	Metal seal

❹ Pilot type

Nil	Internal pilot
R	External pilot

❺ Back pressure check valve (Built-in valve type)

Nil	None
H	Built-in

* Only the rubber seal type is available. A manifold installed type is available if a back pressure check valve with a metal seal is required. Refer to page 212 for ordering examples. However, it is not recommended to use the built-in valve type and the manifold installed type at the same time because it will reduce the flow.
* The built-in valve type back pressure check valve is not available for the 3-position type or the SY7000.

❻ Pilot valve option

Nil	Standard (0.7 MPa)
B	Quick response type (0.7 MPa)
K*1	High pressure type (1.0 MPa)

*1 Only the metal seal type is available for the high pressure type.

❼ Coil type

Nil	Standard
T	With power saving circuit (Continuous duty type)

* Be sure to select the power saving circuit type if the valve is to be continuously energized for long periods of time.
* Be careful of the energizing time when the power saving circuit is selected. Refer to page 292 for details.

❽ Rated voltage

5	24 VDC

❾ Light/surge voltage suppressor and common specification

Symbol	With light	Surge voltage suppressor	Common specification
R	—	●	Non-polar
U	●		
S	—		Positive common
Z	●		
NS	—		Negative common
NZ	●		

* Select "Z" or "NZ" for models with a power saving circuit. Select "R," "U," "S," or "Z" for the valve when the SI unit specification is A2 (positive common). Select "R," "U," "NS," or "NZ" for the valve when the SI unit specification is A2N (negative common).

❿ Manual override

Nil: Non-locking push type

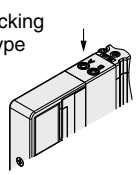

D: Push-turn locking slotted type

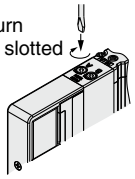

E: Push-turn locking lever type

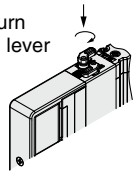

F: Slide locking type

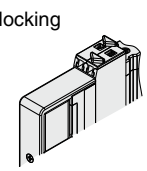

* Refer to page 34 for the safety slide locking manual override.

⓫ A, B port size

Thread piping

Symbol	Port size	Applicable series
M5	M5 x 0.8	SY3000
01	1/8	SY5000
02	1/4	SY7000

One-touch fitting (Metric)

Symbol	A, B port	SY3000	SY5000	SY7000
C2	ø2	●	—	—
C3	ø3.2	●	—	—
C4	ø4	●	●	—
C6	ø6	●	●	●
C8	ø8	—	●	●
C10	ø10	—	—	●
C12	ø12	—	—	●

One-touch fitting (Inch)

Symbol	A, B port	SY3000	SY5000	SY7000
N1	ø1/8"	●	—	—
N3	ø5/32"	●	●	—
N7	ø1/4"	●	●	●
N9	ø5/16"	—	●	●
N11	ø3/8"	—	—	●

⓬ Thread type

Nil	Rc
F	G
N	NPT
T	NPTF

* Only Nil is available for M5.

⓭ Type of mounting screw

Nil	Round head combination screw
B	Hexagon socket head cap screw
K	Round head combination screw (Drop prevention type)
H	Hexagon socket head cap screw (Drop prevention type)

* For "K" and "H," the valve body cover has a drop prevention construction to stop the mounting screws from falling out when the valve is removed for maintenance, etc.
* **When ordering a valve individually, the base gasket is not included.**
  Since the base gasket is attached to the manifold, please order the base gasket separately if it is needed for maintenance. Refer to page 198 for base gasket and mounting screw part numbers.
* "B" and "H" cannot be selected for the individual SUP/EXH spacer assembly or interface regulator.

Protective class class Ⅲ (Mark: Ⅲ)

Type 10
Side Ported

Type 11
Bottom Ported

Plug-in Connector Connecting Base

EX600

SY3000/5000/7000 Series

EtherCAT compatible products (❸ Kit type/Symbol: D) are to be discontinued as of October 2022.
As a substitute, please consider the use of an EX260 series product (SI unit specification/Symbol: DA). However, keep in mind that the product specifications, external appearance, etc., differ.
For details, please contact your SMC sales representative.

How to Order Manifolds

Refer to pages 160 (SY5000) and 161 (SY7000) for the dimensions of Type 11/Bottom-ported type.

SS5Y ❶ **3** – ❷ **10** **S6** ❸ **Q** ❹ ☐ ❺ **2** – ❻ **05** ❼ **U** – ❽ **C6** ❾ ☐

❶ Series

3	SY3000
5	SY5000
7	SY7000

❷ Type

10	Side ported
11	Bottom ported*1

*1 The SY5000 manifold base is used for the bottom-ported SY3000. When ordering, refer to the "Plug-in Mixed Mounting Type Manifold" (from page 165).

❸ SI unit

0	Without SI unit
Q	DeviceNet® (Version A)
N	PROFIBUS DP (Version A)
V	CC-Link
ZE	EtherNet/IP™ (1 port)
EA	EtherNet/IP™ (2 ports)
D	EtherCAT
F	PROFINET
FA	PROFINET (IO-Link unit)
WE	EtherNet/IP™ compatible wireless base*1
WF	PROFINET compatible wireless base*1
WS	Wireless remote*1

*1 The wireless system is suitable for use only in a country where it is in accordance with the Radio Act and regulations of that country.
* I/O unit cannot be mounted without SI unit.
* Valve plate which connects manifold and SI unit is included, but it is not mounted to a valve without SI unit. For mounting, refer to the EX600 series in the **Web Catalog**.

❹ SI unit output polarity, end plate type

SI unit output polarity	M12 power supply connector B-coded (EX600-ED2)	7/8 inch power supply connector (EX600-ED3)	M12 power supply connector IN/OUT, A-coded	
			Pin arrangement 1 (EX600-ED4)	Pin arrangement 2 (EX600-ED5)
Without SI unit	**Nil**			
SI unit positive common	**2**	**3**	**6**	**8**
SI unit negative common	**4**	**5**	**7**	**9**

* Ensure a match with the common specification of the valve to be used.
* When not selecting an SI unit, the symbol will be "nil."

❺ I/O unit stations

Nil	None
1	1 station
⋮	⋮
9	9 stations

* When not selecting an SI unit, the symbol will be "nil."
* SI unit is not included in I/O unit stations.
* When I/O unit is selected, it is shipped separately, and assembled by users. Refer to the attached operation manual for mounting.

❻ Valve stations

Symbol	Stations	Note
02	2 stations	Double wiring*1
⋮	⋮	
16	16 stations	
02	2 stations	Specified layout*2 (Up to 32 solenoids available)
⋮	⋮	
24	24 stations	

*1 Double wiring: 2-position single, double, 3-position, and 4-position valves can be used on all manifold stations.
Use of a 2-position single solenoid will result in an unused control signal. If this is not desired, order with a specified layout.
*2 Specified layout: Indicate the wiring specifications on the manifold specification sheet. (Note that 2-position double, 3-position, and 4-position valves cannot be used where single wiring has been specified.)
* This also includes the number of the blanking plate assembly.

❼ P, E port entry, SUP/EXH block assembly

P, E port entry	Internal pilot	Internal pilot, Built-in silencer	External pilot
U side (2 to 10 stations)	**U**	**C**	**G**
D side (2 to 10 stations)	**D**	**E**	**H**
Both sides (2 to 24 stations)	**B**	**F**	**J**

* 3/5(E) port is plugged for the built-in silencer type.
* When the built-in silencer type is used, keep the exhaust port from coming into direct contact with water or other liquids.

Refer to the page on the right for ❽.

❾ Mounting and Option

Symbol	Mounting	Option	
		Name plate	Station number
Nil	Direct mounting	—	—
AA		●	●
BA		●	—
D☐	DIN rail mounting	—	—
A☐		●	●
B☐		●	—

* Enter the number of stations inside ☐ when it is larger than the number of valve stations. (Refer to "DIN Rail Option" below.)
* Only direct mounting is available for the type 11 bottom-ported type.
* Refer to page 295 for the fixation of DIN rail mounting type manifold.

DIN Rail Option

Nil	Standard length	
0	Without DIN rail (with bracket)	
3	For 3 stations	Specify a longer rail than the total length of specified stations.
⋮	⋮	
24	For 24 stations	

* If the DIN rail must be mounted without an SI unit, select D0. Then, refer to L3 of the dimensions for the DIN rail length and order separately. (Refer to page 203 for the DIN rail part number.)

For details on the EX600 Integrated Type (For Input/Output) Serial Transmission System, refer to the **Web Catalog** and the Operation Manual. For the part numbers of the SI units to be mounted, refer to page 191. (IP40 specifications may be required according to the I/O unit to be selected.) Please download the Operation Manual via the SMC website, https://www.smcworld.com

SMC

❽ A, B port size (Metric/One-touch fitting)

Symbol	A, B port		Type 10/Side ported			Type 11/Bottom ported	
			SY3000	SY5000	SY7000	SY5000	SY7000
C2	Straight	ø2	●	—	—	—	—
C3		ø3.2	●	—	—	—	—
C4		ø4	●	●	—	●	—
C6		ø6	●	●	●	●	●
C8		ø8	—	●	●	●	●
C10		ø10	—	—	●	—	●
C12		ø12	—	—	●	—	●
CM*1		Straight port, mixed sizes	●	●	●	●	●
L4	Elbow*2 Upward	ø4	●	●	—	—	—
L6		ø6	●	●	●	—	—
L8		ø8	—	●	●	—	—
L10		ø10	—	—	●	—	—
L12		ø12	—	—	●	—	—
B4	Elbow*2 Downward	ø4	●	●	—	—	—
B6		ø6	●	●	●	—	—
B8		ø8	—	●	●	—	—
B10		ø10	—	—	●	—	—
B12		ø12	—	—	●	—	—
LM*1		Elbow port, mixed sizes (Including upward and downward piping)	●	●	●	—	—
P, E port size (One-touch fittings)			ø8	ø10	ø12	ø10	ø12

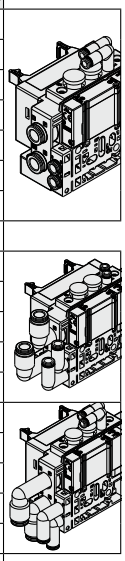

A, B port size (Inch/One-touch fitting)

Symbol	A, B port		Type 10/Side ported			Type 11/Bottom ported	
			SY3000	SY5000	SY7000	SY5000	SY7000
N1	Straight	ø1/8"	●	—	—	—	—
N3		ø5/32"	●	●	—	●	—
N7		ø1/4"	●	●	●	●	●
N9		ø5/16"	—	●	●	●	●
N11		ø3/8"	—	—	●	—	●
CM*1		Straight port, mixed sizes	●	●	●	●	●
LN3	Elbow*2 Upward	ø5/32"	●	—	—	—	—
LN7		ø1/4"	●	●	—	—	—
LN9		ø5/16"	—	●	—	—	—
LN11		ø3/8"	—	—	●	—	—
BN3	Elbow*2 Downward	ø5/32"	●	—	—	—	—
BN7		ø1/4"	●	●	—	—	—
BN9		ø5/16"	—	●	—	—	—
BN11		ø3/8"	—	—	●	—	—
LM*1		Elbow port, mixed sizes (Including upward and downward piping)	●	●	●	—	—
P, E port size (One-touch fittings)			ø5/16"	ø3/8"	ø1/2"	ø3/8"	ø1/2"

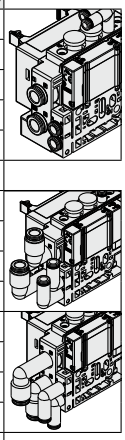

*1 Indicate the sizes on the manifold specification sheet in the case of "CM" or "LM."
The direction of P, E port fittings is the same as for the A, B port. If selecting "LM," indicate it on the manifold specification sheet for the P, E port fitting direction.

*2 To avoid interference with the body or piping, select a downward elbow port when mounting the optional spacer assembly (pages 204 to 206).

How to Order Manifold Assembly

Example (SS5Y3-10S6□-□)

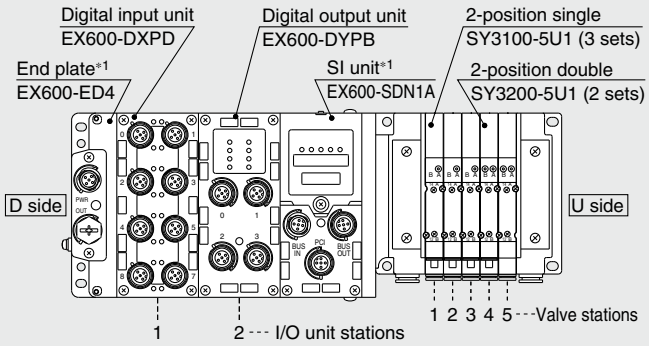

SS5Y3-10S6Q72-05B-C6 ··· 1 set (Type 10 5-station manifold base part no.)
***SY3100-5U1 ····· 3 sets (2-position single part no.)**
***SY3200-5U1 ····· 2 sets (2-position double part no.)**
***EX600-DXPD ····· 1 set I/O unit part number (Station 1)**
***EX600-DYPB ····· 1 set I/O unit part number (Station 2)**
The asterisk denotes the symbol for the assembly. Prefix it to the part numbers of the valve, etc.

- For the valve arrangement, the valve closest to the D side is considered the 1st station.
- Under the manifold part number, state the valves to be mounted, then the I/O units in order starting with the 1st station as shown in the figure above. If the arrangement becomes too complicated, specify the details on a manifold specification sheet.

*1 Do not enter the SI unit part number and the end plate part number together.

* When mixing top-ported configurations, select from those listed on page 124.
In such cases, use caution as there is also output on the A and B ports on the base side.
Specify on the manifold specification sheet if plugs are required for the A and B ports on the base side.

Protective class
class Ⅲ (Mark: ⧫)

How to Order Valves (With mounting screw)

Refer to page 15 for valve specifications.

SY 3 1 0 0 □ □ □ □ – 5 □ □ 1 – □

❶ ❷ ❸ ❹ ❺ ❻ ❼ ❽ ❾ ❿ ⓫

❸ Base mounted

❶ Series

3	SY3000
5	SY5000
7	SY7000

❷ Type of actuation

1	2-position	Single
2		Double
3	3-position	Closed center
4		Exhaust center
5		Pressure center
A*1	4-position dual 3-port	N.C./N.C.
B*1		N.O./N.O.
C*1		N.C./N.O.

*1 Only the rubber seal type is available for the 4-position dual 3-port valve.

❸ Seal type

0	Rubber seal
1	Metal seal

❹ Pilot type

Nil	Internal pilot
R	External pilot

❺ Back pressure check valve (Built-in valve type)

Nil	None
H	Built-in

* Only the rubber seal type is available. A manifold installed type is available if a back pressure check valve with a metal seal is required. Refer to page 212 for ordering examples. However, it is not recommended to use the built-in valve type and the manifold installed type at the same time because it will reduce the flow.
* The built-in valve type back pressure check valve is not available for the 3-position type or the SY7000.

❻ Pilot valve option

Nil	Standard (0.7 MPa)
B	Quick response type (0.7 MPa)
K*1	High pressure type (1.0 MPa)

*1 Only the metal seal type is available for the high pressure type.

❼ Coil type

Nil	Standard
T	With power saving circuit (Continuous duty type)

* Be sure to select the power saving circuit type if the valve is to be continuously energized for long periods of time.
* Be careful of the energizing time when the power saving circuit is selected. Refer to page 292 for details.

❽ Rated voltage

5	24 VDC

❾ Light/surge voltage suppressor and common specification

Symbol	With light	Surge voltage suppressor	Common specification
R	—	●	Non-polar
U	●		
S	—		Positive common
Z	●		
NS	—		Negative common
NZ	●		

* Select “R,” “U,” “S,” or “Z” for the valve when the SI unit output polarity is positive common. Select “R,” “U,” “NS,” or “NZ” for the valve when the SI unit output polarity is negative common.
* Only “Z” and “NZ” types are available with a power saving circuit.

❿ Manual override

Nil: Non-locking push type	**D**: Push-turn locking slotted type
E: Push-turn locking lever type	**F**: Slide locking type

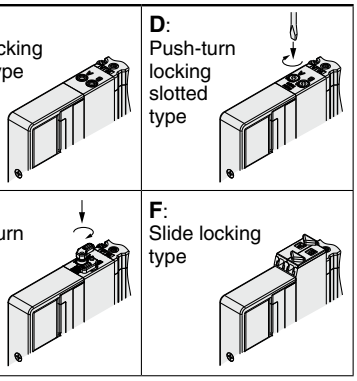

* Refer to page 34 for the safety slide locking manual override.

⓫ Type of mounting screw

Nil	Round head combination screw
B	Hexagon socket head cap screw
K	Round head combination screw (Drop prevention type)
H	Hexagon socket head cap screw (Drop prevention type)

* For “K” and “H,” the valve body cover has a drop prevention construction to stop the mounting screws from falling out when the valve is removed for maintenance, etc.
* **When ordering a valve individually, the base gasket is not included.**
  Since the base gasket is attached to the manifold, please order the base gasket separately if it is needed for maintenance. Refer to page 198 for base gasket and mounting screw part numbers.
* “B” and “H” cannot be selected for the individual SUP/EXH spacer assembly, interface regulator, or double check spacer assembly with residual pressure release valve.

⚠ Protective class class Ⅲ (Mark: ⧫)

Plug-in Connector Connecting Base

Type 10/Side Ported

EX600 (M12 Connector)

Dimensions: SY3000 Series

SS5Y3-10S6□ 2/4/6/7/8/9 □- Stations U/D/B- C2 / C3, N1 / C4, N3 / C6, N7 (D)

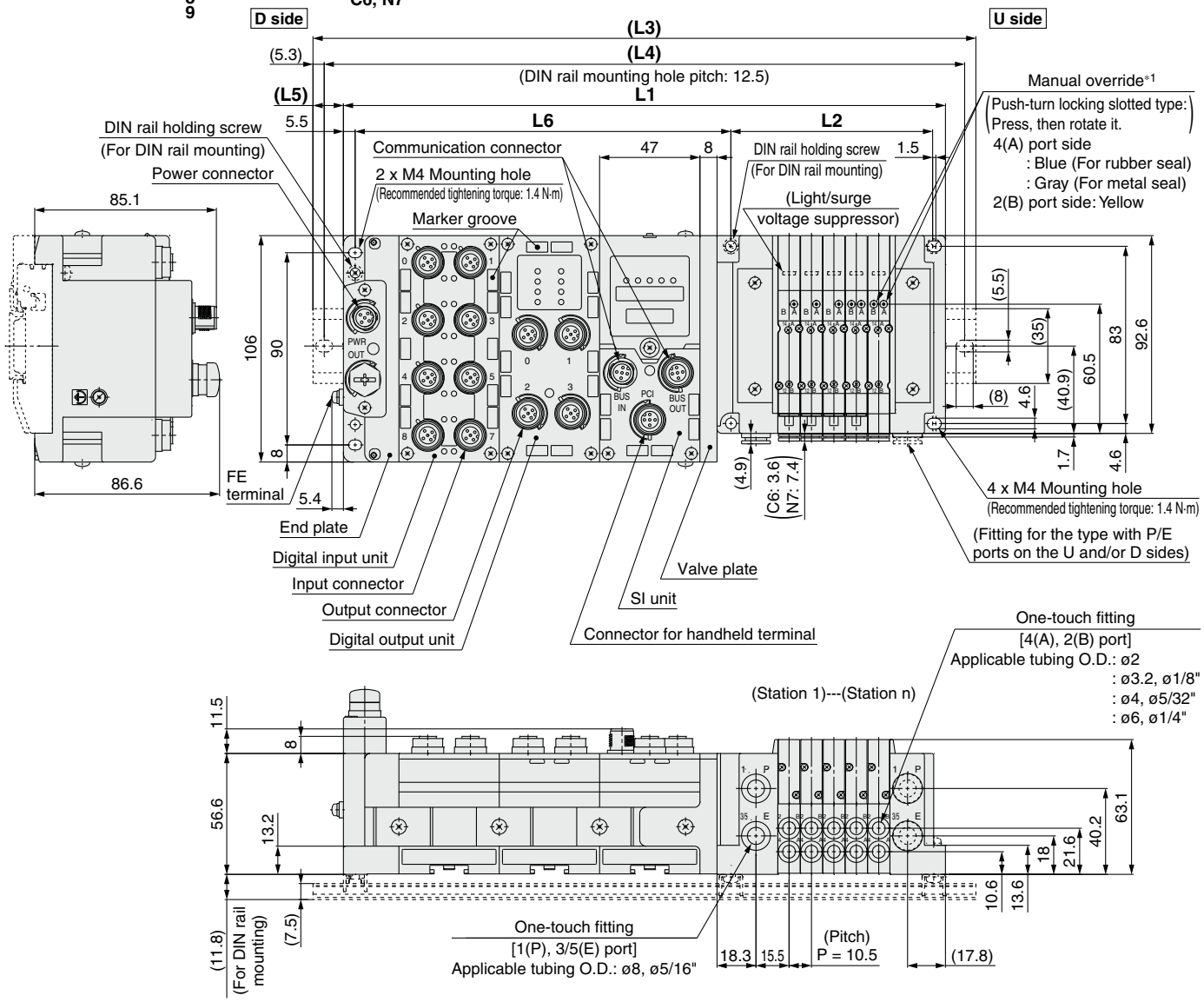

L1 = 10.5 x n1 + 135.5 + 47 x n2
L2 = 10.5 x n1 + 42
L4 = L3 – 10.5
L5 = (L3 – L1)/2
L6 = 47 x n2 + 82

n1: Valve stations
n2: I/O unit stations

∗1 Refer to page 157 for dimensions of the external pilot, silencer, elbow fittings, and slide locking manual override.
∗ These figures show the "SS5Y3-10S6Q22-05D-C6."
∗ Refer to page 162 for dimensions of A or B port top-ported type.

L3: DIN Rail Overall Length

I/O unit stations (n2) \ Valve stations (n1)	2	3	4	5	6	7	8	9	10	11	12	13	14	15	16	17	18	19	20	21	22	23	24
0	185.5	198	210.5	223	223	235.5	248	260.5	273	285.5	285.5	298	310.5	323	335.5	348	348	360.5	373	385.5	398	410.5	423
1	235.5	248	248	260.5	273	285.5	298	310.5	323	323	335.5	348	360.5	373	385.5	385.5	398	410.5	423	435.5	448	448	460.5
2	285.5	285.5	298	310.5	323	335.5	348	348	360.5	373	385.5	398	410.5	410.5	423	435.5	448	460.5	473	485.5	485.5	498	510.5
3	323	335.5	348	360.5	373	385.5	385.5	398	410.5	423	435.5	448	448	460.5	473	485.5	498	510.5	510.5	523	535.5	548	560.5
4	373	385.5	398	410.5	410.5	423	435.5	448	460.5	473	473	485.5	498	510.5	523	535.5	548	548	560.5	573	585.5	598	610.5
5	423	435.5	448	448	460.5	473	485.5	498	510.5	510.5	523	535.5	548	560.5	573	573	585.5	598	610.5	623	635.5	635.5	648
6	473	473	485.5	498	510.5	523	535.5	535.5	548	560.5	573	585.5	598	610.5	610.5	623	635.5	648	660.5	673	673	685.5	698
7	510.5	523	535.5	548	560.5	573	573	585.5	598	610.5	623	635.5	635.5	648	660.5	673	685.5	698	698	710.5	723	735.5	748
8	560.5	573	585.5	598	598	610.5	623	635.5	648	660.5	673	673	685.5	698	710.5	723	735.5	735.5	748	760.5	773	785.5	798
9	610.5	623	635.5	635.5	648	660.5	673	685.5	698	698	710.5	723	735.5	748	760.5	760.5	773	785.5	798	810.5	823	835.5	835.5

Dimensions: SY3000 Series

SS5Y3-10S6□ 3/5 □- Stations U/D/B- C2, C3, N1, C4, N3, C6, N7 (D)

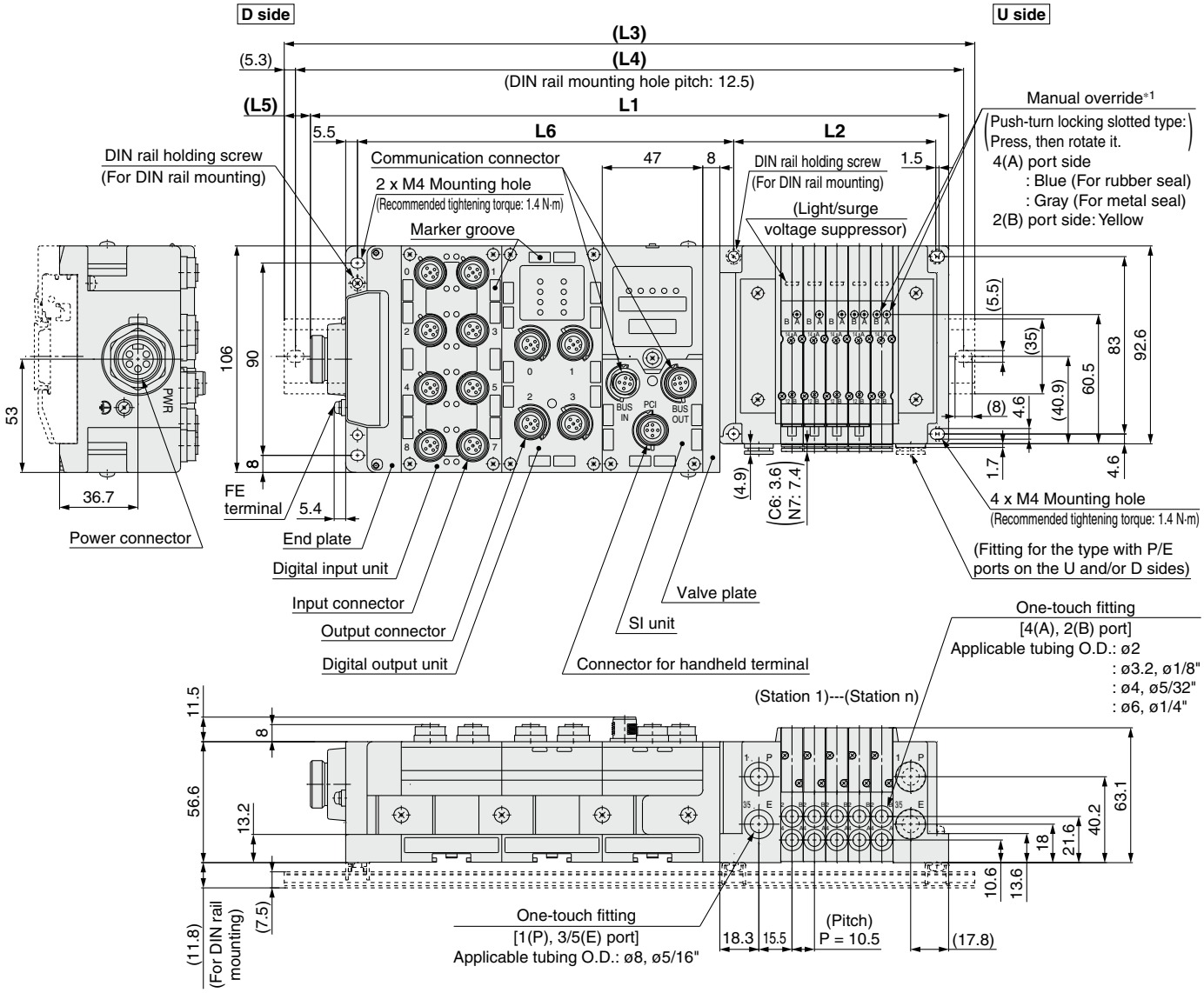

L1 = 10.5 x n1 + 152 + 47 x n2
L2 = 10.5 x n1 + 42
L4 = L3 – 10.5
L5 = (L3 – L1)/2
L6 = 47 x n2 + 82

n1: Valve stations
n2: I/O unit stations

*1 Refer to page 157 for dimensions of the external pilot, silencer, elbow fittings, and slide locking manual override.
* These figures show the "SS5Y3-10S6Q32-05D-C6."
* Refer to page 162 for dimensions of A or B port top-ported type.

L3: DIN Rail Overall Length

I/O unit stations (n2) \ Valve stations (n1)	2	3	4	5	6	7	8	9	10	11	12	13	14	15	16	17	18	19	20	21	22	23	24
0	198	210.5	223	235.5	248	260.5	260.5	273	285.5	298	310.5	323	323	335.5	348	360.5	373	385.5	385.5	398	410.5	423	435.5
1	248	260.5	273	285.5	285.5	298	310.5	323	335.5	348	360.5	360.5	373	385.5	398	410.5	423	423	435.5	448	460.5	473	485.5
2	298	310.5	323	323	335.5	348	360.5	373	385.5	385.5	398	410.5	423	435.5	448	448	460.5	473	485.5	498	510.5	523	523
3	348	348	360.5	373	385.5	398	410.5	423	423	435.5	448	460.5	473	485.5	485.5	498	510.5	523	535.5	548	548	560.5	573
4	385.5	398	410.5	423	435.5	448	448	460.5	473	485.5	498	510.5	510.5	523	535.5	548	560.5	573	585.5	585.5	598	610.5	623
5	435.5	448	460.5	473	485.5	485.5	498	510.5	523	535.5	548	548	560.5	573	585.5	598	610.5	610.5	623	635.5	648	660.5	673
6	485.5	498	510.5	510.5	523	535.5	548	560.5	573	573	585.5	598	610.5	623	635.5	648	648	660.5	673	685.5	698	710.5	710.5
7	535.5	548	548	560.5	573	585.5	598	610.5	610.5	623	635.5	648	660.5	673	673	685.5	698	710.5	723	735.5	735.5	748	760.5
8	573	585.5	598	610.5	623	635.5	635.5	648	660.5	673	685.5	698	710.5	710.5	723	735.5	748	760.5	773	773	785.5	798	810.5
9	623	635.5	648	660.5	673	673	685.5	698	710.5	723	735.5	735.5	748	760.5	773	785.5	798	798	810.5	823	835.5	848	860.5

Plug-in Connector Connecting Base

Type 10/Side Ported

EX600 (M12 Connector)

Dimensions: SY5000 Series

SS5Y5-10S6□ 2/4/6/7/8/9 □- Stations U C4, N3 / D C6, N7 / B C8, N9 (D)

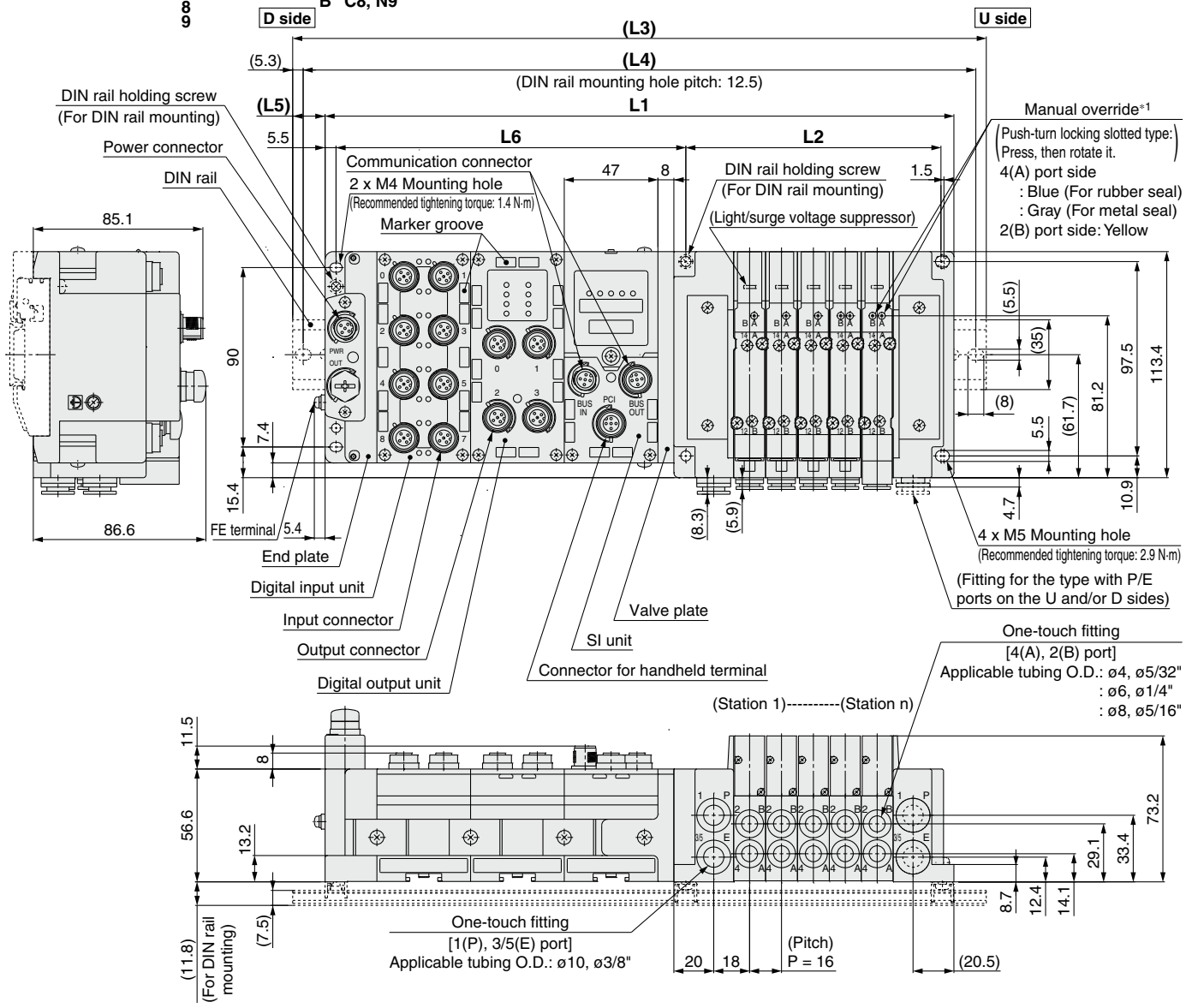

L1 = 16 x n1 + 141.5 + 47 x n2
L2 = 16 x n1 + 48
L4 = L3 – 10.5
L5 = (L3 – L1)/2
L6 = 47 x n2 + 81.5

n1: Valve stations
n2: I/O unit stations

*1 Refer to page 158 for dimensions of the external pilot, silencer, elbow fittings, and slide locking manual override.
* These figures show the "SS5Y5-10S6Q22-05D-C8."
* Refer to page 163 for dimensions of A or B port top-ported type.

L3: DIN Rail Overall Length

I/O unit stations (n2) \ Valve stations (n1)	2	3	4	5	6	7	8	9	10	11	12	13	14	15	16	17	18	19	20	21	22	23	24
0	198	223	235.5	248	273	285.5	298	310.5	335.5	348	360.5	373	398	410.5	423	448	460.5	473	485.5	510.5	523	535.5	560.5
1	248	260.5	285.5	298	310.5	335.5	348	360.5	373	398	410.5	423	448	460.5	473	485.5	510.5	523	535.5	548	573	585.5	598
2	298	310.5	323	348	360.5	373	398	410.5	423	435.5	460.5	473	485.5	510.5	523	535.5	548	573	585.5	598	623	635.5	648
3	348	360.5	373	398	410.5	423	435.5	460.5	473	485.5	498	523	535.5	548	573	585.5	598	610.5	635.5	648	660.5	685.5	698
4	385.5	410.5	423	435.5	460.5	473	485.5	498	523	535.5	548	573	585.5	598	610.5	635.5	648	660.5	673	698	710.5	723	748
5	435.5	448	473	485.5	498	523	535.5	548	560.5	585.5	598	610.5	635.5	648	660.5	673	698	710.5	723	748	760.5	773	785.5
6	485.5	498	523	535.5	548	560.5	585.5	598	610.5	623	648	660.5	673	698	710.5	723	735.5	760.5	773	785.5	810.5	823	835.5
7	535.5	548	560.5	585.5	598	610.5	623	648	660.5	673	698	710.5	723	735.5	760.5	773	785.5	798	823	835.5	848	873	885.5
8	573	598	610.5	623	648	660.5	673	685.5	710.5	723	735.5	760.5	773	785.5	798	823	835.5	848	873	885.5	898	910.5	935.5
9	623	648	660.5	673	685.5	710.5	723	735.5	748	773	785.5	798	823	835.5	848	860.5	885.5	898	910.5	935.5	948	960.5	973

Plug-in
Connector Connecting Base

Type 10/Side Ported
EX600 (7/8 Inch Connector)

Dimensions: SY5000 Series

SS5Y5-10S6□ 3/5 □- Stations U C4, N3 / D C6, N7 / B C8, N9 (D)

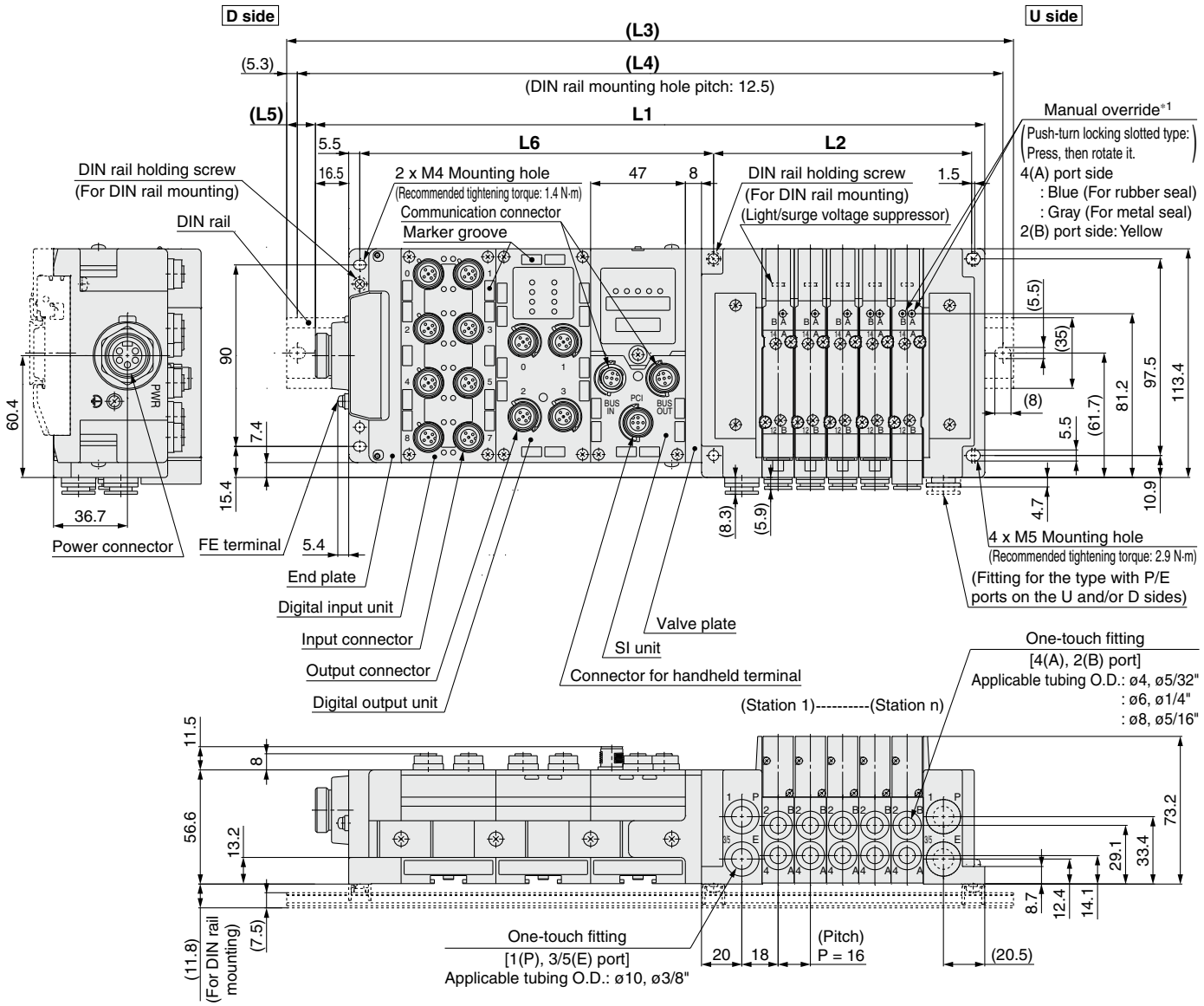

L1 = 16 x n1 + 158 + 47 x n2
L2 = 16 x n1 + 48
L4 = L3 – 10.5
L5 = (L3 – L1)/2
L6 = 47 x n2 + 81.5

n1: Valve stations
n2: I/O unit stations

*1 Refer to page 158 for dimensions of the external pilot, silencer, elbow fittings, and slide locking manual override.
* These figures show the "SS5Y5-10S6Q32-05D-C8."
* Refer to page 163 for dimensions of A or B port top-ported type.

L3: DIN Rail Overall Length

I/O unit stations (n2) \ Valve stations (n1)	2	3	4	5	6	7	8	9	10	11	12	13	14	15	16	17	18	19	20	21	22	23	24
0	223	235.5	248	273	285.5	298	310.5	335.5	348	360.5	385.5	398	410.5	423	448	460.5	473	485.5	510.5	523	535.5	560.5	573
1	260.5	285.5	298	310.5	335.5	348	360.5	373	398	410.5	423	448	460.5	473	485.5	510.5	523	535.5	560.5	573	585.5	598	623
2	310.5	335.5	348	360.5	373	398	410.5	423	435.5	460.5	473	485.5	510.5	523	535.5	548	573	585.5	598	623	635.5	648	660.5
3	360.5	373	398	410.5	423	435.5	460.5	473	485.5	510.5	523	535.5	548	573	585.5	598	610.5	635.5	648	660.5	685.5	698	710.5
4	410.5	423	435.5	460.5	473	485.5	498	523	535.5	548	573	585.5	598	610.5	635.5	648	660.5	685.5	698	710.5	723	748	760.5
5	460.5	473	485.5	498	523	535.5	548	560.5	585.5	598	610.5	635.5	648	660.5	673	698	710.5	723	748	760.5	773	785.5	810.5
6	498	523	535.5	548	560.5	585.5	598	610.5	635.5	648	660.5	673	698	710.5	723	735.5	760.5	773	785.5	810.5	823	835.5	848
7	548	560.5	585.5	598	610.5	623	648	660.5	673	698	710.5	723	735.5	760.5	773	785.5	810.5	823	835.5	848	873	885.5	898
8	598	610.5	623	648	660.5	673	685.5	710.5	723	735.5	760.5	773	785.5	798	823	835.5	848	873	885.5	898	910.5	935.5	948
9	648	660.5	673	685.5	710.5	723	735.5	760.5	773	785.5	798	823	835.5	848	860.5	885.5	898	910.5	935.5	948	960.5	973	—

Plug-in Connector Connecting Base

Type 10/Side Ported

EX600 (M12 Connector)

Dimensions: SY7000 Series

SS5Y7-10S6□2/4/6/7/8/9□-Stations U/D/B-C6, N7 / C8, N9 / C10, N11 / C12 (D)

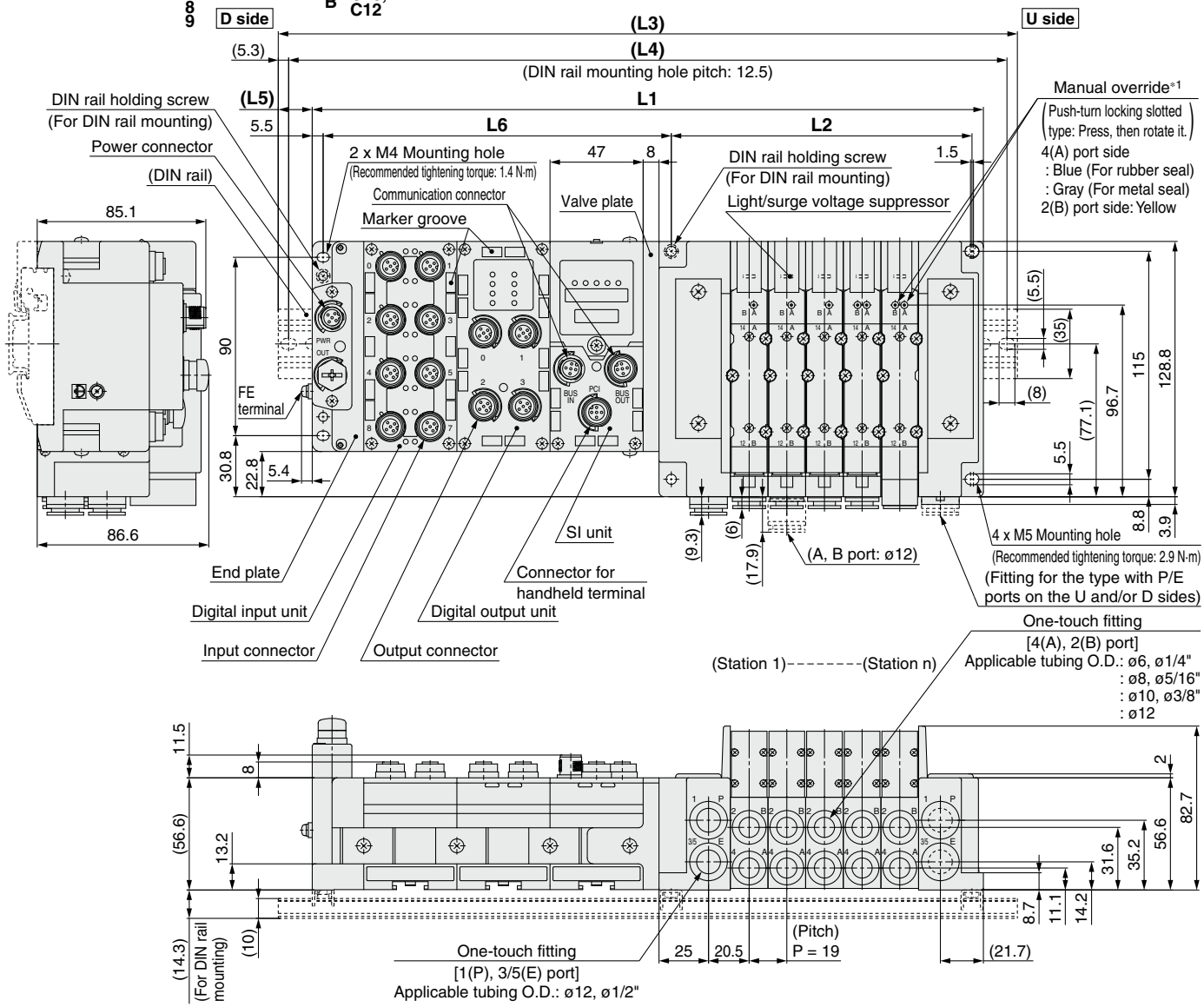

L1 = 19 x n1 + 149.7 + 47 x n2
L2 = 19 x n1 + 56
L3 = DIN rail dimension
L4 = L3 – 10.5
L5 = (L3 – L1)/2
L6 = 47 x n2 + 81.7

n1: Valve stations
n2: I/O unit stations

∗1 Refer to page 159 for dimensions of the external pilot, silencer, elbow fittings, and slide locking manual override.
∗ These figures show the "SS5Y7-10S6Q22-05D-C10."
∗ Refer to page 164 for dimensions of A or B port top-ported type.

L3: DIN Rail Overall Length

I/O unit stations (n2) \ Valve stations (n1)	2	3	4	5	6	7	8	9	10	11	12	13	14	15	16	17	18	19	20	21	22	23	24
0	223	235.5	260.5	273	298	310.5	335.5	348	373	385.5	410.5	423	448	460.5	485.5	498	523	535.5	560.5	573	598	610.5	635.5
1	260.5	285.5	298	323	335.5	360.5	373	398	410.5	435.5	448	473	498	510.5	535.5	548	573	585.5	610.5	623	648	660.5	685.5
2	310.5	335.5	348	373	385.5	410.5	423	448	460.5	485.5	498	523	535.5	560.5	573	598	610.5	635.5	648	673	685.5	710.5	723
3	360.5	373	398	410.5	435.5	448	473	485.5	510.5	523	548	573	585.5	610.5	623	648	660.5	685.5	698	723	735.5	760.5	773
4	410.5	423	448	460.5	485.5	498	523	535.5	560.5	573	598	610.5	635.5	648	673	685.5	710.5	723	748	760.5	785.5	798	823
5	448	473	485.5	510.5	523	548	560.5	585.5	598	623	648	660.5	685.5	698	723	735.5	760.5	773	798	810.5	835.5	848	873
6	498	523	535.5	560.5	573	598	610.5	635.5	648	673	685.5	710.5	723	748	760.5	785.5	798	823	835.5	860.5	873	898	923
7	548	560.5	585.5	598	623	635.5	660.5	673	698	723	735.5	760.5	773	798	810.5	835.5	848	873	885.5	910.5	923	948	960.5
8	598	610.5	635.5	648	673	685.5	710.5	723	748	760.5	785.5	798	823	835.5	860.5	873	898	910.5	935.5	948	973	—	—
9	635.5	660.5	673	698	710.5	735.5	748	773	798	810.5	835.5	848	873	885.5	910.5	923	948	960.5	985.5	—	—	—	—

Plug-in
Connector Connecting Base

Type 10/Side Ported
EX600 (7/8 Inch Connector)

Dimensions: SY7000 Series

SS5Y7-10S6□ 3/5 □- Stations U/D/B- C6, N7 / C8, N9 / C10, N11 / C12 (D)

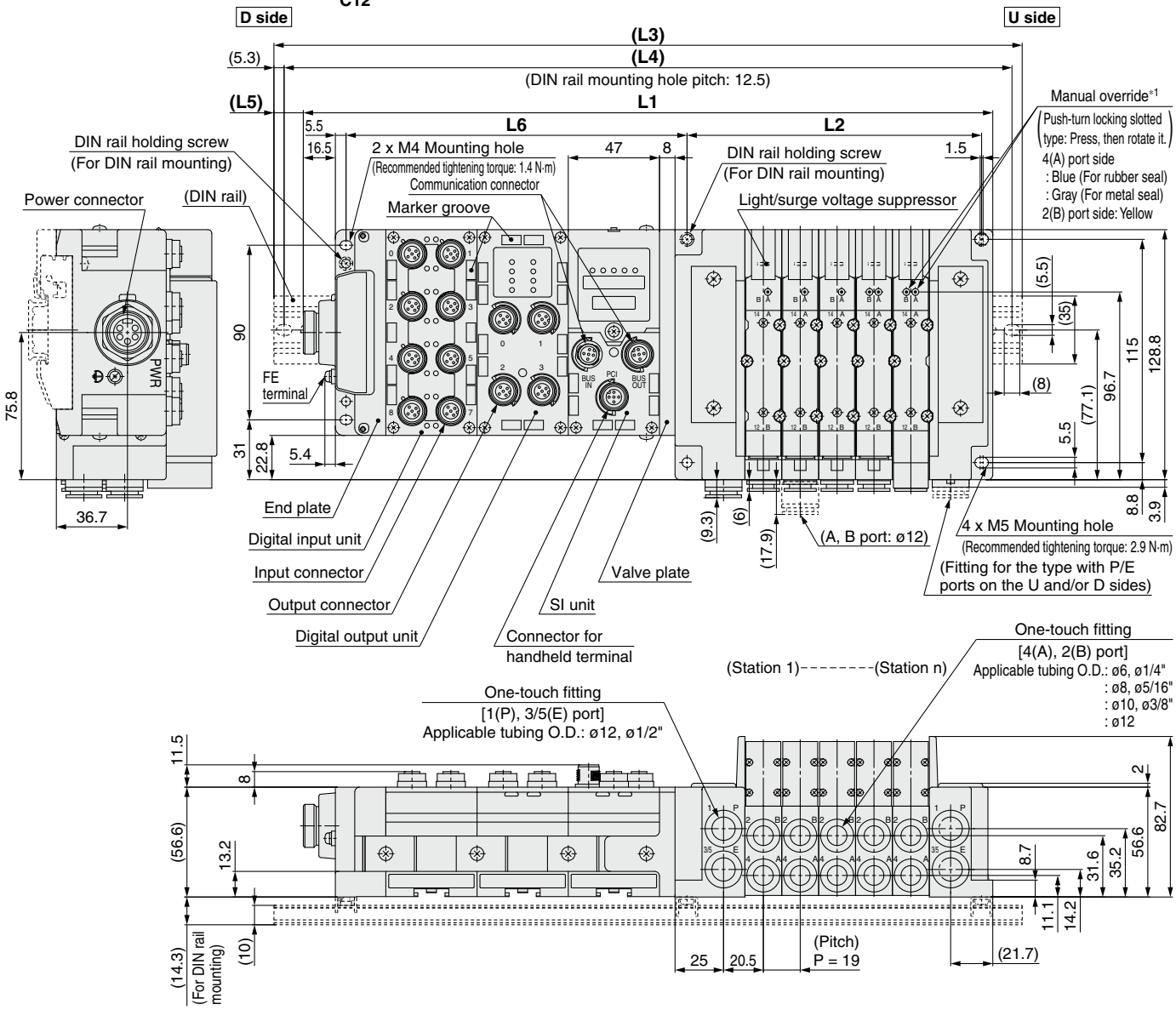

L1 = 19 x n1 + 166.2 + 47 x n2
L2 = 19 x n1 + 56
L4 = L3 – 10.5
L5 = (L3 – L1)/2
L6 = 47 x n2 + 81.7

n1: Valve stations
n2: I/O unit stations

*1 Refer to page 159 for dimensions of the external pilot, silencer, elbow fittings, and slide locking manual override.
* These figures show the "SS5Y7-10S6Q32-05D-C10."
* Refer to page 164 for dimensions of A or B port top-ported type.

L3: DIN Rail Overall Length

I/O unit stations (n2) \ Valve stations (n1)	2	3	4	5	6	7	8	9	10	11	12	13	14	15	16	17	18	19	20	21	22	23	24
0	235.5	248	273	285.5	310.5	323	348	360.5	385.5	410.5	423	448	460.5	485.5	498	523	535.5	560.5	573	598	610.5	635.5	648
1	285.5	298	323	335.5	360.5	373	398	410.5	435.5	448	473	485.5	510.5	523	548	560.5	585.5	598	623	635.5	660.5	685.5	698
2	323	348	360.5	385.5	398	423	435.5	460.5	485.5	498	523	535.5	560.5	573	598	610.5	635.5	648	673	685.5	710.5	723	748
3	373	398	410.5	435.5	448	473	485.5	510.5	523	548	560.5	585.5	598	623	635.5	660.5	673	698	710.5	735.5	760.5	773	798
4	423	435.5	460.5	473	498	510.5	535.5	560.5	573	598	610.5	635.5	648	673	685.5	710.5	723	748	760.5	785.5	798	823	835.5
5	473	485.5	510.5	523	548	560.5	585.5	598	623	635.5	660.5	673	698	710.5	735.5	748	773	785.5	810.5	835.5	848	873	885.5
6	510.5	535.5	548	573	585.5	610.5	635.5	648	673	685.5	710.5	723	748	760.5	785.5	798	823	835.5	860.5	873	898	910.5	935.5
7	560.5	585.5	598	623	635.5	660.5	673	698	710.5	735.5	748	773	785.5	810.5	823	848	860.5	885.5	910.5	923	948	960.5	985.5
8	610.5	623	648	660.5	685.5	710.5	723	748	760.5	785.5	798	823	835.5	860.5	873	898	910.5	935.5	948	973	985.5	—	—
9	660.5	673	698	710.5	735.5	748	773	785.5	810.5	823	848	860.5	885.5	898	923	935.5	960.5	985.5	—	—	—	—	—

Plug-in Connector Connecting Base

EX600

Type 12
Top Ported

SY3000/5000/7000 Series

EtherCAT compatible products (❷ Kit type/Symbol: D) are to be discontinued as of October 2022.
As a substitute, please consider the use of an EX260 series product (SI unit specification/Symbol: DA). However, keep in mind that the product specifications, external appearance, etc., differ.
For details, please contact your SMC sales representative.

How to Order Manifolds

Refer to pages 162 to 164 for the dimensions of Type 12/Top-ported type.

SS5Y [3] – 12S6 [Q] [ ] [2] – [05] [U] – [ ] [ ]
❶ ❷ ❸ ❹ ❺ ❻ ❼ ❽

❶ Series

3	SY3000
5	SY5000
7	SY7000

❷ SI unit

0	Without SI unit
Q	DeviceNet® (Version A)
N	PROFIBUS DP (Version A)
V	CC-Link
ZE	EtherNet/IP™ (1 port)
EA	EtherNet/IP™ (2 ports)
D	EtherCAT
F	PROFINET
FA	PROFINET (IO-Link unit)
WE	EtherNet/IP™ compatible wireless base*1
WF	PROFINET compatible wireless base*1
WS	Wireless remote*1

*1 The wireless system is suitable for use only in a country where it is in accordance with the Radio Act and regulations of that country.
* I/O unit cannot be mounted without SI unit.
* Valve plate which connects manifold and SI unit is included, but it is not mounted to a valve without SI unit. For mounting, refer to the EX600 series in the **Web Catalog**.

❸ SI unit output polarity, end plate type

SI unit output polarity	M12 power supply connector B-coded (EX600-ED2)	7/8 inch power supply connector (EX600-ED3)	M12 power supply connector IN/OUT, A-coded	
			Pin arrangement 1 (EX600-ED4)	Pin arrangement 2 (EX600-ED5)
Without SI unit	**Nil**			
SI unit positive common	**2**	**3**	**6**	**8**
SI unit negative common	**4**	**5**	**7**	**9**

* When not selecting an SI unit, the symbol will be "nil."
* Ensure a match with the common specification of the valve to be used.

❹ I/O unit stations

Nil	None
1	1 station
⋮	⋮
9	9 stations

* When not selecting an SI unit, the symbol will be "nil."
* SI unit is not included in I/O unit stations.
* When I/O unit is selected, it is shipped separately, and assembled by users. Refer to the attached operation manual for mounting.

❺ Valve stations

Symbol	Stations	Note
02	2 stations	Double wiring*1
⋮	⋮	
16	16 stations	
02	2 stations	Specified layout*2 (Up to 32 solenoids available)
⋮	⋮	
24	24 stations	

*1 Double wiring: 2-position single, double, 3-position, and 4-position valves can be used on all manifold stations.
Use of a 2-position single solenoid will result in an unused control signal. If this is not desired, order with a specified layout.
*2 Specified layout: Indicate the wiring specifications on the manifold specification sheet. (Note that 2-position double, 3-position, and 4-position valves cannot be used where single wiring has been specified.)
* This also includes the number of the blanking plate assembly.

❻ P, E port entry, SUP/EXH block assembly

P, E port entry	Internal pilot	Internal pilot, Built-in silencer	External pilot
U side (2 to 10 stations)	**U**	**C***1	**G**
D side (2 to 10 stations)	**D**	**E***1	**H**
Both sides (2 to 24 stations)	**B**	—	**J**

*1 For SUP/EXH block assembly specifications, built-in silencer types will have P port entry stipulated.
* The P and E ports are only available on the U and D sides for the built-in silencer type. 3/5(E) port is plugged. The silencer exhaust port is located on the opposite side of the P and E port entry. (Example: When the P and E port entry is on the D side, the silencer exhaust port is on the U side.)
* When the built-in silencer type is used, keep the exhaust port from coming into direct contact with water or other liquids.

❼ P, E port size (One-touch fittings)

Symbol	SY3000	SY5000	SY7000
Nil	ø8	ø10	ø12
N	ø5/16"	ø3/8"	ø1/2"

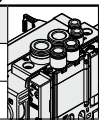

* For N, sizes are in inches.

❽ Mounting

Nil	Direct mounting	
D	DIN rail mounting (With DIN rail)	
D0	DIN rail mounting (Without DIN rail)	
D3	For 3 stations	Specify a length longer than that of the standard rail.
⋮	⋮	
D24	For 24 stations	

* If the DIN rail must be mounted without an SI unit, select D0. Then, refer to L3 of the dimensions for the DIN rail length and order separately. (Refer to page 203 for the DIN rail part number.)
* Refer to page 295 for the fixation of DIN rail mounting type manifold.

For details on the EX600 Integrated Type (For Input/Output) Serial Transmission System, refer to the **Web Catalog** and the Operation Manual.
For the part numbers of the SI units to be mounted, refer to page 191. (IP40 specifications may be required according to the I/O unit to be selected.)
Please download the Operation Manual via the SMC website, https://www.smcworld.com

How to Order Manifold Assembly

Example (SS5Y3-12S6□-□)

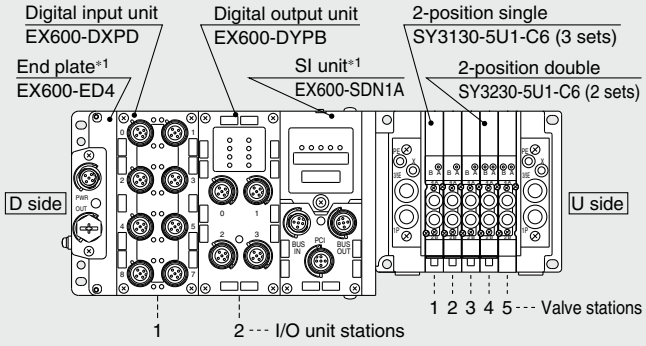

SS5Y3-12S6Q72-05B ····· 1 set (Type 12 5-station manifold base part no.)
***SY3130-5U1-C6 ····· 3 sets (2-position single part no.)**
***SY3230-5U1-C6 ····· 2 sets (2-position double part no.)**
***EX600-DXPD ····· 1 set I/O unit part number (Station 1)**
***EX600-DYPB ····· 1 set I/O unit part number (Station 2)**
The asterisk denotes the symbol for the assembly. Prefix it to the part numbers of the valve, etc.

- For the valve arrangement, the valve closest to the D side is considered the 1st station.
- Under the manifold part number, state the valves to be mounted, then the I/O units in order starting with the 1st station as shown in the figure above. If the arrangement becomes too complicated, specify the details on a manifold specification sheet.

*1 Do not enter the SI unit part number and the end plate part number together.

How to Order Valves (With mounting screw)

Refer to page 15 for valve specifications.

SY 3 1 3 0 □ □ □ □ – 5 □ □ 1 – C6 □ – □

❶ ❷ ❸ ❹ ❺ ❻ ❼ ❽ ❾ ❿ ⓫ ⓬ ⓭

❸: Top ported

❶ Series

3	SY3000
5	SY5000
7	SY7000

❷ Type of actuation

1	2-position	Single
2		Double
3	3-position	Closed center
4		Exhaust center
5		Pressure center
A*1	4-position dual 3-port	N.C./N.C.
B*1		N.O./N.O.
C*1		N.C./N.O.

*1 Only the rubber seal type is available for the 4-position dual 3-port valve.

❸ Seal type

0	Rubber seal
1	Metal seal

❹ Pilot type

Nil	Internal pilot
R	External pilot

❺ Back pressure check valve

Nil	None
H	Built-in

* Only the rubber seal type is available. A manifold installed type is available if a back pressure check valve with a metal seal is required. Refer to page 212 for ordering examples. However, it is not recommended to use the built-in valve type and the manifold installed type at the same time because it will reduce the flow.
* The built-in valve type back pressure check valve is not available for the 3-position type or the SY7000.

❻ Pilot valve option

Nil	Standard (0.7 MPa)
B	Quick response type (0.7 MPa)
K*1	High pressure type (1.0 MPa)

*1 Only the metal seal type is available for the high pressure type.

❼ Coil type

Nil	Standard
T	With power saving circuit (Continuous duty type)

* Be sure to select the power saving circuit type if the valve is to be continuously energized for long periods of time.
* Be careful of the energizing time when the power saving circuit is selected. Refer to page 292 for details.

❽ Rated voltage

5	24 VDC

❾ Light/surge voltage suppressor and common specification

Symbol	With light	Surge voltage suppressor	Common specification
R	—	●	Non-polar
U	●		
S	—		Positive common
Z	●		
NS	—		Negative common
NZ	●		

* Select “R,” “U,” “S,” or “Z” for the valve when the SI unit output polarity is positive common. Select “R,” “U,” “NS,” or “NZ” for the valve when the SI unit output polarity is negative common.
* Only “Z” and “NZ” types are available with a power saving circuit.

❿ Manual override

Nil: Non-locking push type

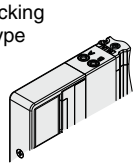

D: Push-turn locking slotted type

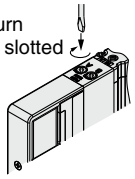

E: Push-turn locking lever type

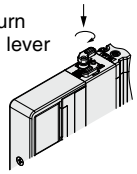

F: Slide locking type

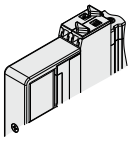

* Refer to page 34 for the safety slide locking manual override.

⓫ A, B port size

Thread piping

Symbol	Port size	Applicable series
M5	M5 x 0.8	SY3000
01	1/8	SY5000
02	1/4	SY7000

One-touch fitting (Metric)

Symbol	A, B port	SY3000	SY5000	SY7000
C2	ø2	●	—	—
C3	ø3.2	●	—	—
C4	ø4	●	●	—
C6	ø6	●	●	●
C8	ø8	—	●	●
C10	ø10	—	—	●
C12	ø12	—	—	●

One-touch fitting (Inch)

Symbol	A, B port	SY3000	SY5000	SY7000
N1	ø1/8"	●	—	—
N3	ø5/32"	●	●	—
N7	ø1/4"	●	●	●
N9	ø5/16"	—	●	●
N11	ø3/8"	—	—	●

⓬ Thread type

Nil	Rc
F	G
N	NPT
T	NPTF

* Only Nil is available for M5.

⓭ Type of mounting screw

Nil	Round head combination screw
B	Hexagon socket head cap screw
K	Round head combination screw (Drop prevention type)
H	Hexagon socket head cap screw (Drop prevention type)

* For “K” and “H,” the valve body cover has a drop prevention construction to stop the mounting screws from falling out when the valve is removed for maintenance, etc.
* **When ordering a valve individually, the base gasket is not included.**
  Since the base gasket is attached to the manifold, please order the base gasket separately if it is needed for maintenance. Refer to page 198 for base gasket and mounting screw part numbers.
* “B” and “H” cannot be selected for the individual SUP/EXH spacer assembly or interface regulator.

Protective class class Ⅲ (Mark: ⧫)

Type 10
Side Ported

Type 11
Bottom Ported

Plug-in Connector Connecting Base

EX245

SY3000/5000/7000 Series

How to Order Manifold

Side Ported/Bottom Ported **SS5Y 3 – 10 S AAN □ □ – 05 D □ – C6**

❶ ❷ ❸ ❹ ❺ ❻ ❼ ❽ ❾

Only direct mounting is selectable for the manifold.

Refer to pages 160 (SY5000) and 161 (SY7000) for the dimensions of Type 11/Bottom-ported type.

❶ Series

3	SY3000
5	SY5000
7	SY7000

❷ Type

10	Side ported
11*1	Bottom ported

*1: The SY5000 manifold base is used for the bottom-ported SY3000. When ordering, refer to the "Plug-in Mixed Mounting Type Manifold" (from page 165).

❸ SI Unit specifications

Symbol (output polarity) Negative common (PNP)	Protocol	Communication connector	Power supply connector
0	Without SI Unit		
AAN	PROFINET	Push/Pull (SCRJ): 2 pcs.	Push/Pull (24 V): 2 pcs.
ABN		Push/Pull (RJ45): 2 pcs.	Push/Pull (24 V): 2 pcs.
ACN		M12: 2 pcs.	7/8 inch: 2 pcs.

*: The valve output polarity for the SI unit is negative common (PNP).

❹ With or without I/O modules

Nil	Without I/O module
Y	With I/O module

❺ Number of I/O modules

Nil	Without I/O module (Without SI Unit)
1	1 station
⋮	⋮
8	8 stations

❻ Valve stations (In the case of the 32-output SI Unit)

Symbol	Stations	Note
02	2 stations	Double wiring*1
⋮	⋮	
16	16 stations	
02	2 stations	Specified layout*2 (Available up to 32 solenoids)
⋮	⋮	
24	24 stations	

*1: Double wiring: 2-position single, double, 3-position and 4-position valves can be used on all manifold stations. Use of a 2-position single solenoid will result in an unused control signal. If this is not desired, order with a specified layout

*2: Specified layout: Indicate the wiring specifications on the manifold specification sheet. (Note that 2-position double, 3-position and 4-position valves cannot be used where single wiring has been specified.)

*3: This also includes the number of blanking plate assembly.

❼ P, E port entry

U	U side (2 to 10 stations)
D	D side (2 to 10 stations)
B	Both sides (2 to 24 stations)

❽ SUP/EXH block assembly

Nil	Internal pilot
S	Internal pilot, Built-in silencer
R	External pilot

*: 3/5(E) port is plugged for the built-in silencer type.

*: When the built-in silencer type is used, keep the exhaust port from coming in direct contact with water or other liquids.

For details about the EX245 Integrated-type (For Input/Output) Serial Transmission System, refer to the Web Catalog and the Operation Manual. For details about part numbers of SI Units to be mounted, refer to pages 192-1 and 192-2. Please download the Operation Manual via SMC website, https://www.smcworld.com

❾ A, B port size (Metric)

Symbol		A, B port	10 (Side ported) series SY3000	10 (Side ported) series SY5000	10 (Side ported) series SY7000	11 (Bottom ported) series SY5000	11 (Bottom ported) series SY7000	
C2	Straight	ø2	●	—	—	—	—	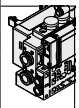
C3		ø3.2	●	—	—	—	—	
C4		ø4	●	●	—	●	—	
C6		ø6	●	●	●	●	●	
C8		ø8	—	●	●	●	●	
C10		ø10	—	—	●	—	●	
C12		ø12	—	—	●	—	●	
CM*2		Straight port, mixed sizes	●	●	●	●	●	
L4	Elbow*1 Upward	ø4	●	●	—	—	—	
L6		ø6	●	●	●	—	—	
L8		ø8	—	●	●	—	—	
L10		ø10	—	—	●	—	—	
L12		ø12	—	—	●	—	—	
B4	Elbow*1 Downward	ø4	●	●	—	—	—	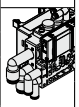
B6		ø6	●	●	●	—	—	
B8		ø8	—	●	●	—	—	
B10		ø10	—	—	●	—	—	
B12		ø12	—	—	●	—	—	
LM		Elbow port, mixed sizes (Including upward and downward piping)	●	●	●	—	—	
P, E port size (One-touch fittings)			ø8	ø10	ø12	ø10	ø12	

A, B port size (Inch)

Symbol		A, B port	10 (Side ported) series SY3000	10 (Side ported) series SY5000	10 (Side ported) series SY7000	11 (Bottom ported) series SY5000	11 (Bottom ported) series SY7000	
N1	Straight	ø1/8"	●	—	—	—	—	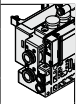
N3		ø5/32"	●	●	—	●	—	
N7		ø1/4"	●	●	●	●	●	
N9		ø5/16"	—	●	●	●	●	
N11		ø3/8"	—	—	●	—	●	
CM*2		Straight port, mixed sizes	●	●	●	●	●	
LN3	Elbow*1 Upward	ø5/32"	●	—	—	—	—	
LN7		ø1/4"	●	●	—	—	—	
LN9		ø5/16"	—	●	—	—	—	
LN11		ø3/8"	—	—	●	—	—	
BN3	Elbow*1 Downward	ø5/32"	●	—	—	—	—	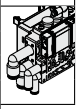
BN7		ø1/4"	●	●	—	—	—	
BN9		ø5/16"	—	●	—	—	—	
BN11		ø3/8"	—	—	●	—	—	
LM		Elbow port, mixed sizes (Including upward and downward piping)	●	●	●	—	—	
P, E port size (One-touch fittings)			ø5/16"	ø3/8"	ø1/2"	ø3/8"	ø1/2"	

*1: To avoid interference with the body or piping, select downward elbow port when mounting the optional spacer assembly (pages 204 to 207).

*2: When using mixed sizes for the A and B ports, please indicate so on the separate manifold specification sheet.

How to Order Manifold Assembly

Example (SS5Y3-10SAAN-□)

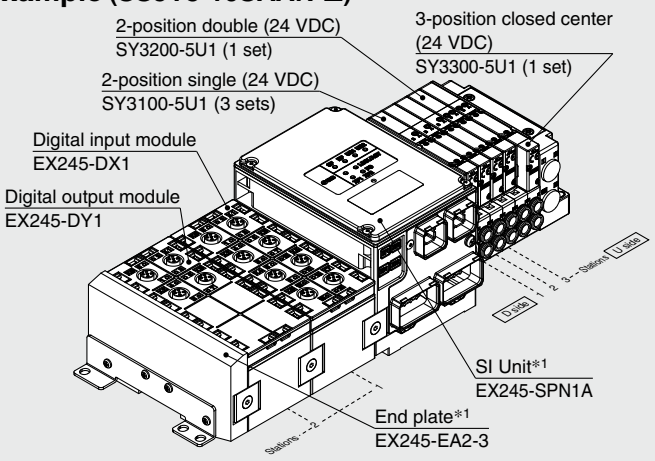

SS5Y3-10SAANY2-05D-C6 ···1 set (Type 10 5-station manifold base part no.)
∗SY3100-5U1 ·····3 sets (2-position single part no.)
∗SY3200-5U1 ·····1 set (2-position double part no.)
∗SY3300-5U1 ·····1 set (3-position closed center part no.)
∗EX245-DX1 ·····1set I/O module part no.
∗EX245-DY1 ·····1set I/O module part no.
→The asterisk denotes the symbol for assembly. Prefix it to the part numbers of the valve etc.

- The valve arrangement is numbered as the 1st station from the D side.
- The I/O module station arrangement is numbered starting from the SI unit side.
- Under the manifold part number, state the valves to be mounted, then the I/O module in order from the 1st station as shown in the figure above. If the arrangement becomes complicated, specify on a manifold specification sheet.

∗1: Do not enter the SI Unit part number and the end plate part number together.
∗: When mixing top ported configurations, select from page 124-6. In this case, use caution as there is also output on the A and B port on base side. Specify on a manifold specification sheet if plugs are required on the A and B port on base side.

How to Order Valves (With mounting screw)

Refer to page 15 for valve specifications.

SY 3 1 0 0 □ □ □ □ – 5 □ □ 1 – □
❶ ❷ ❸ ❹ ❺ ❻ ❼ ❽ ❾ ❿ ⓫

● Base mounted

❶ Series

3	SY3000
5	SY5000
7	SY7000

❷ Type of actuation

1	2-position	Single
2		Double
3	3-position	Closed center
4		Exhaust center
5		Pressure center
A∗1	4-position dual 3-port	N.C./N.C.
B∗1		N.O./N.O.
C∗1		N.C./N.C.

∗1: Only rubber seal type is available for the 4-position dual 3-port valve.

❸ Seal type

0	Rubber seal
1	Metal seal

❹ Pilot type

Nil	Internal pilot
R	External pilot

❺ Back pressure check valve (Built-in valve type)

Nil	None
H	Built-in

∗: Only rubber seal type. Manifold installed type is available if the back pressure check valve is required for a valve with metal seal. Refer to page 212 for Ordering Example. However, it is not recommended to use the built-in valve type and the manifold installed type at the same time because it will reduce the flow.
∗: The built-in valve type back pressure check valve is not available for the 3-position type or the SY7000.

❻ Pilot valve option

Nil	Standard (0.7 MPa)
B	Quick response type (0.7 MPa)
K∗1	High pressure type (1.0 MPa)

∗1: Only metal seal type is available for the high pressure type.

❼ Coil type

Nil	Standard
T	With power saving circuit (Continuous duty type)

∗: Be sure to select the power saving circuit type when the valve is continuously energized for long periods of time.
∗: Be careful of the energizing time when the power saving circuit is selected. Refer to page 292 for details.

❽ Rated voltage

5	24 VDC

❾ Light/surge voltage suppressor and common specification

Symbol	With light	Surge voltage suppressor	Common specification
R	—	●	Non-polar
U	●		
NS	—		Negative common
NZ	●		

∗: "R" and "U" are applicable for every SI Unit.
∗: Only "NZ" types are available for with the power saving circuit.

❿ Manual override

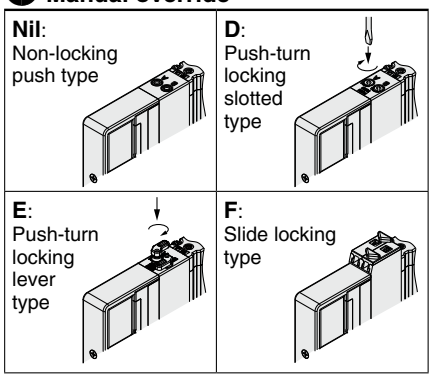

∗: Refer to page 34 for with the safety slide locking manual override.

⓫ Type of mounting screw

Nil	Round head combination screw
B	Hexagon socket head cap screw
K	Round head combination screw (Falling-out-prevention type)
H	Hexagon socket head cap screw (Falling-out-prevention type)

∗: For "K" and "H", the valve body cover has a drop prevention construction to stop the mounting screws from falling out when the valve is removed for maintenance etc.
∗: **When ordering a valve individually, the base gasket is not included.**
Since the base gasket is attached to the manifold, please order the base gasket separately if it is needed for maintenance service.
Refer to page 198 for part numbers of the base gasket and mounting screw.
∗: "B" and "H" cannot be selected for the individual SUP/EXH spacer assembly, interface regulator or double check spacer assembly with residual pressure release valve.

⚠ Protective class class Ⅲ (Mark: Ⅲ)

Dimensions: SY3000 Series

SS5Y3-10SA□ - Stations U/D/B - C2,N1 / C3,N3 / C4,N7 / C6,CM

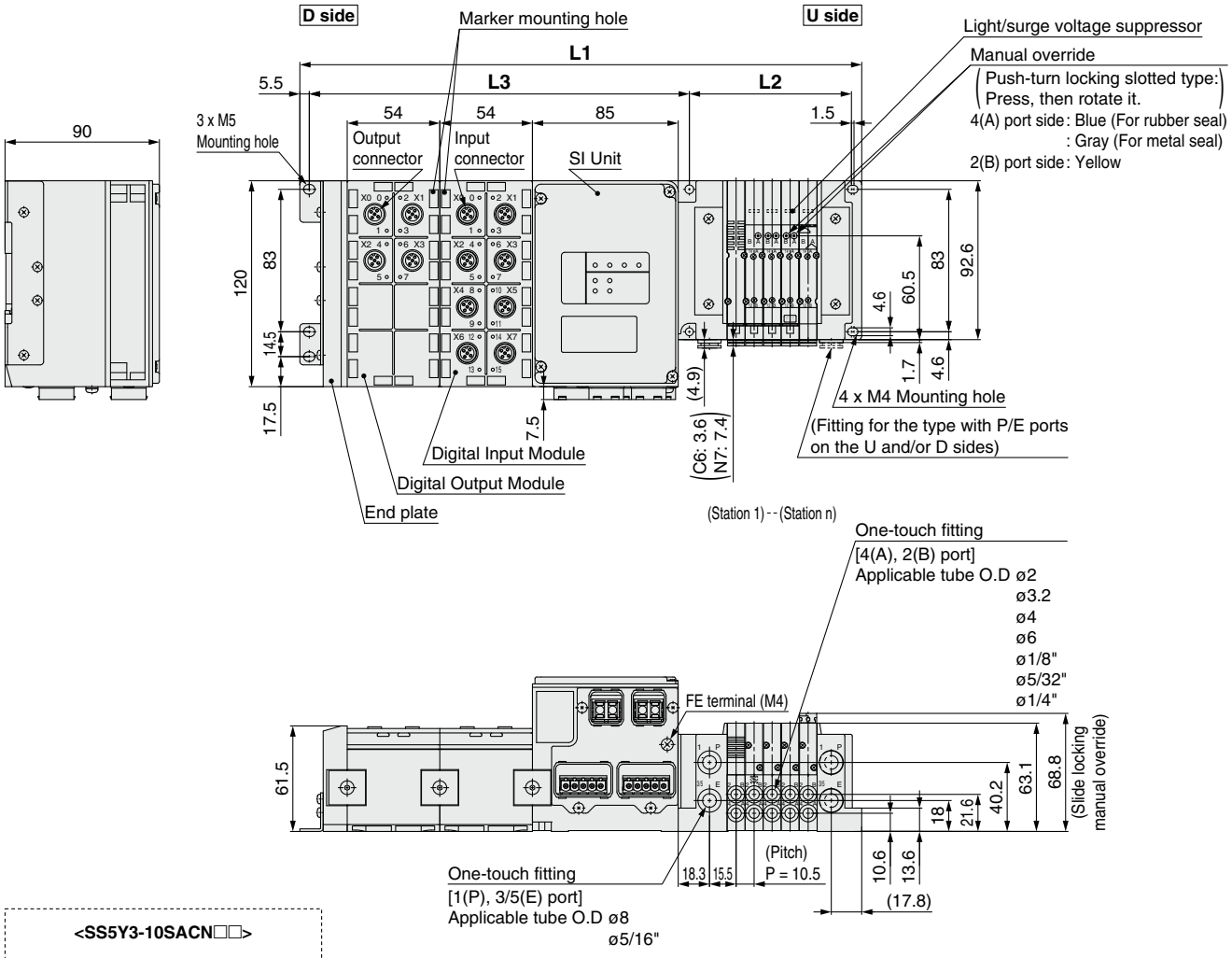

<SS5Y3-10SACN□□>

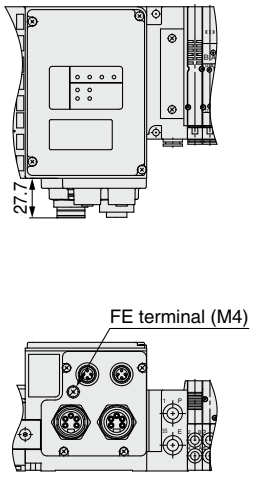

∗: These figures show the “SS5Y3-10SAANY2-05D-C6”.
∗: Refer to page 157 for dimensions of external pilot, silencer and elbow fittings.
∗: Refer to page 162 for dimensions of A or B port top-ported type.

L3 = 54 x n2 + 113.6

Dimensions

Formula/L1 = 10.5 x n1 + 167.1 L2 = 10.5 x n1 + 42 ∗ The L1 dimension is the dimension without an I/O module. Add 54 mm to this dimension for each I/O module.

∗ n1 is the valve stations.
n2 is the number of I/O module stations.

Stations n1	2	3	4	5	6	7	8	9	10	11	12	13	14	15	16	17	18	19	20	21	22	23	24
L1	188.1	198.6	209.1	219.6	230.1	240.6	251.1	261.6	272.1	282.6	293.1	303.6	314.1	324.6	335.1	345.6	356.1	366.6	377.1	387.6	398.1	408.6	419.1
L2	63	73.5	84	94.5	105	115.5	126	136.5	147	157.5	168	178.5	189	199.5	210	220.5	231	241.5	252	262.5	273	283.5	294

Type 10/Side Ported
EX245

Dimensions: SY5000 Series

SS5Y5-10SA□ - Stations U/D/B - C4,N3 / C6,N7 / C8,N9 / CM

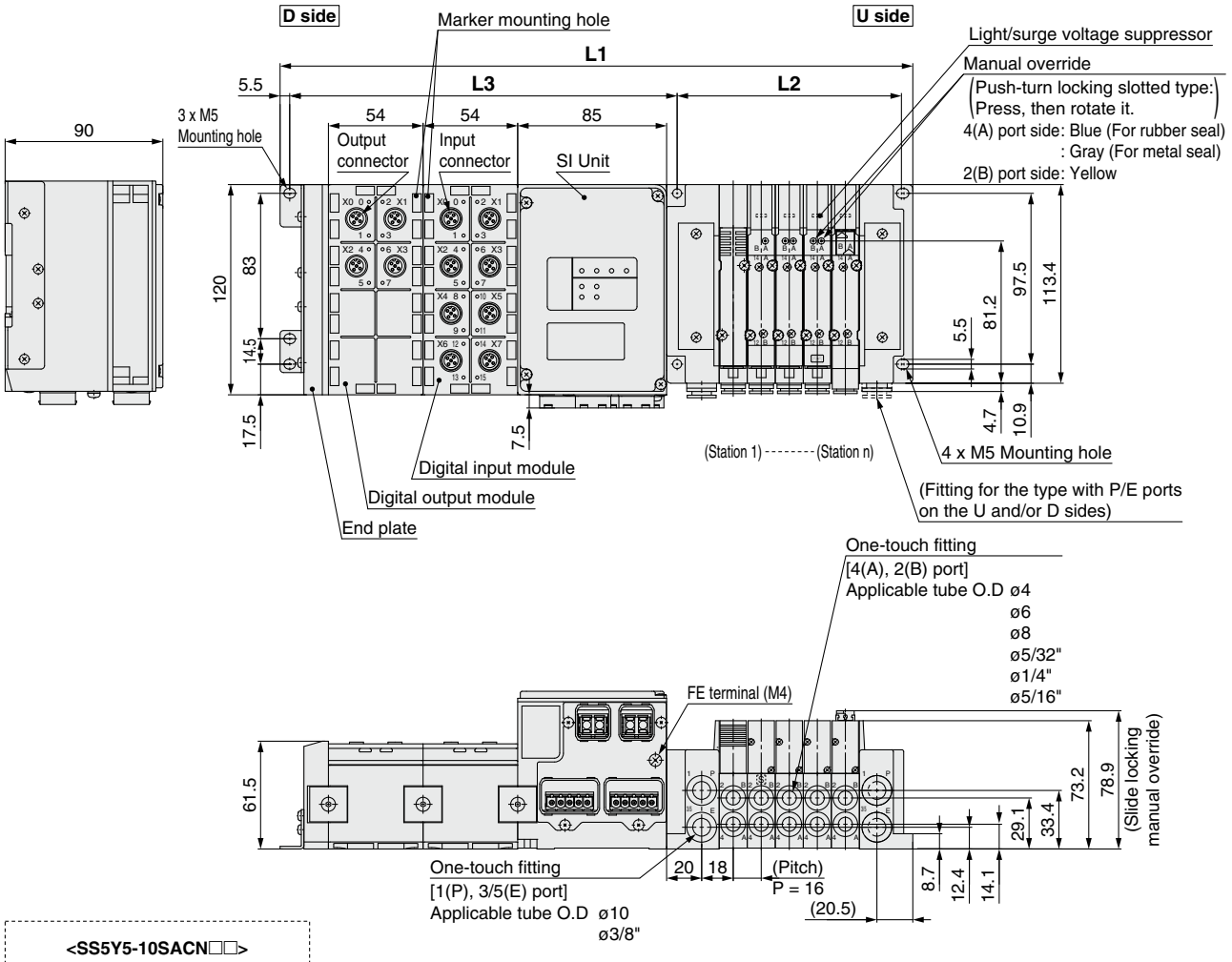

<SS5Y5-10SACN□□>

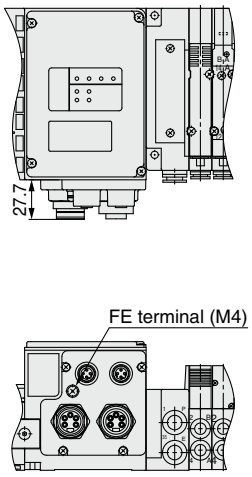

* These figures show the "SS5Y5-10SAANY2-05D-C8".
* Refer to page 158 for dimensions of external pilot, silencer and elbow fittings.
* Refer to page 163 for dimensions of A or B port top-ported type.

L3 = 54 x n2 + 113.1

Dimensions

Formula/L1 = 16 x n1 + 173.1 L2 = 16 x n1 + 48 * The L1 dimension is the dimension without an I/O module. Add 54 mm to this dimension for each I/O module.

* n1 is the valve stations.
n2 is the number of I/O module stations.

Stations n1	2	3	4	5	6	7	8	9	10	11	12	13	14	15	16	17	18	19	20	21	22	23	24
L1	205.1	221.1	237.1	253.1	269.1	285.1	301.1	317.1	333.1	349.1	365.1	381.1	397.1	413.1	429.1	445.1	461.1	477.1	493.1	509.1	525.1	541.1	557.1
L2	80	96	112	128	144	160	176	192	208	224	240	256	272	288	304	320	336	352	368	384	400	416	432

Dimensions: SY7000 Series

SS5Y7-10SA□ - Stations U/D/B - C6,N7 / C8,N9 / C10,N11 / C12,CM

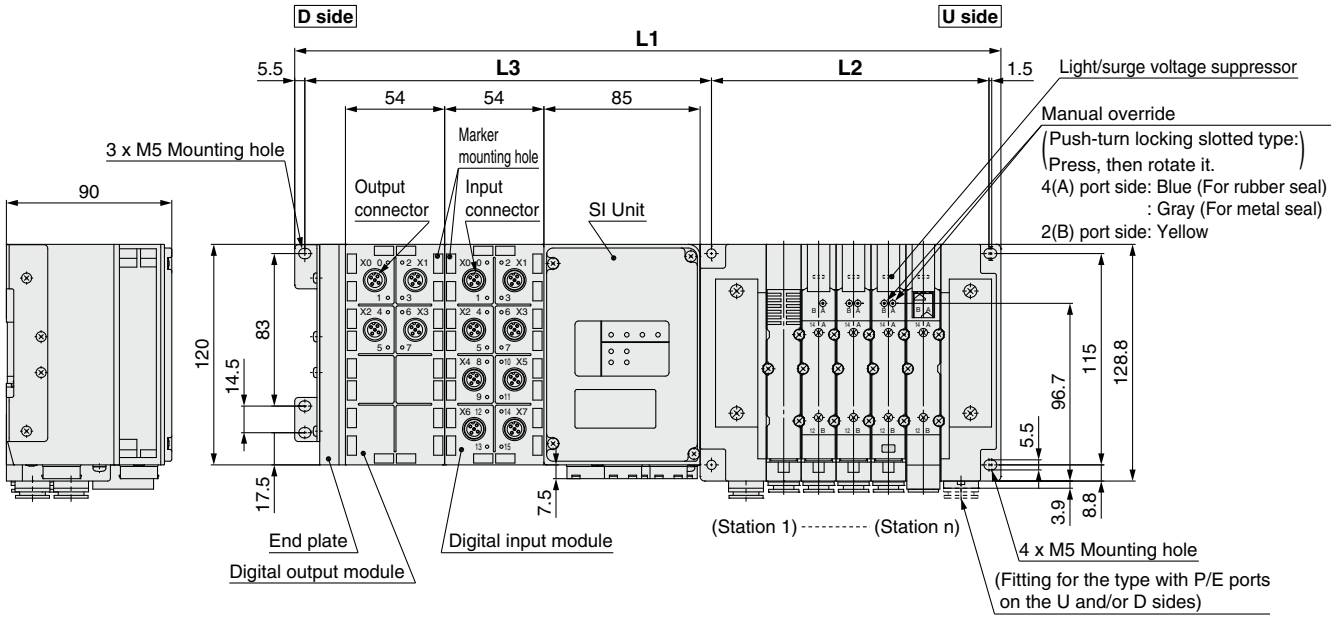

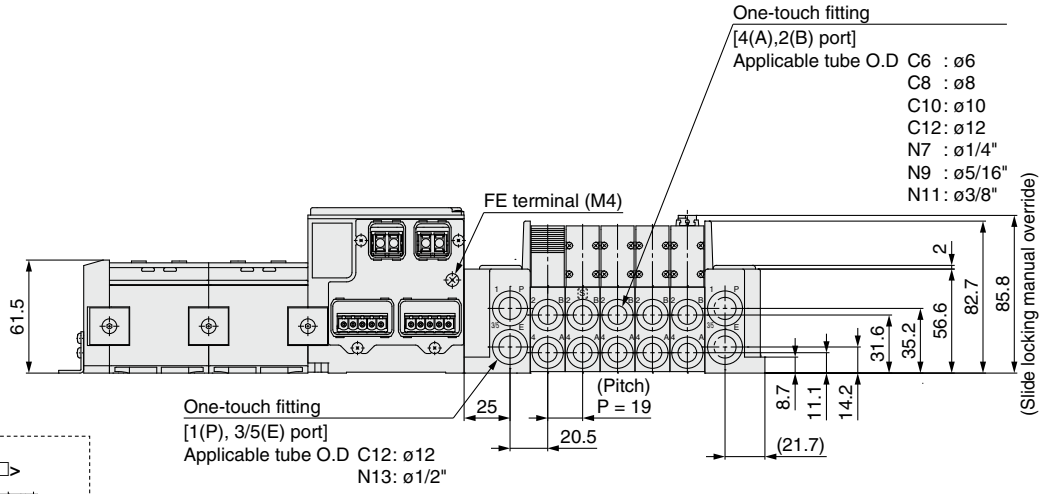

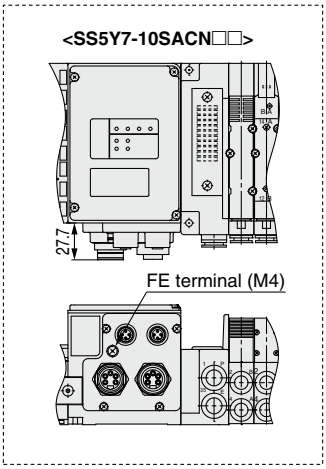

∗ These figures show the "SS5Y7-10SAANY2-05D-C10".
∗ Refer to page 159 for dimensions of external pilot, silencer and elbow fittings.
∗ Refer to page 164 for dimensions of A or B port top-ported type.

L3 = 54 x n2 + 113.3

Dimensions

Formula/L1 = 19 x n1 + 181.3 L2 = 19 x n1 + 56 ∗ The L1 dimension is the dimension without an I/O module. Add 54 mm to this dimension for each I/O module.

∗ n1 is the valve stations.
n2 is the number of I/O module stations.

Stations n1	2	3	4	5	6	7	8	9	10	11	12	13	14	15	16	17	18	19	20	21	22	23	24
L1	219.3	238.3	257.3	276.3	295.3	314.3	333.3	352.3	371.3	390.3	409.3	428.3	447.3	466.3	485.3	504.3	523.3	542.3	561.3	580.3	599.3	618.3	637.3
L2	94	113	132	151	170	189	208	227	246	265	284	303	322	341	360	379	398	417	436	455	474	493	512

Type 12
Top ported

Plug-in Connector Connecting Base

EX245

SY3000/5000/7000 Series

How to Order Manifold

Top ported **SS5Y 3 – 12S AAN □ □ – 05 D S – N**

❶ ❷ ❸ ❹ ❺ ❻ ❼ ❽

Only direct mounting is selectable for the manifold.

Refer to pages 162 to 164 for the dimensions of Type 12/Top-ported type.

❶ Series

3	SY3000
5	SY5000
7	SY7000

❷ SI Unit specifications

Symbol (output polarity) Negative common (PNP)	Protocol	Communication connector	Power supply connector
0	Without SI Unit		
AAN	PROFINET	Push/Pull (SCRJ): 2 pcs.	Push/Pull (24 V): 2 pcs.
ABN		Push/Pull (RJ45): 2 pcs.	Push/Pull (24 V): 2 pcs.
ACN		M12: 2 pcs.	7/8 inch: 2 pcs.

∗: The valve output polarity for the SI unit is negative common (PNP).

❸ With or without I/O modules

Nil	Without I/O module
Y	With I/O module

❹ Number of I/O modules

Nil	Without I/O module (Without SI Unit)
1	1 station
⋮	⋮
8	8 stations

❺ Valve stations

(In the case of the 32-output SI Unit)

Symbol	Stations	Note
02	2 stations	Double wiring∗1
⋮	⋮	
16	16 stations	
02	2 stations	Specified layout∗2 (Available up to 32 solenoids)
⋮	⋮	
24	24 stations	

∗1: Double wiring: 2-position single, double, 3-position and 4-position valves can be used on all manifold stations. Use of a 2-position single solenoid will result in an unused control signal. If this is not desired, order with a specified layout

∗2: Specified layout: Indicate the wiring specifications on the manifold specification sheet. (Note that 2-position double, 3-position and 4-position valves cannot be used where single wiring has been specified.)

∗: This also includes the number of blanking plate assembly.

❻ P, E port entry

U	U side (2 to 10 stations)
D	D side (2 to 10 stations)
B	Both sides (2 to 24 stations)

For details about the EX245 Integrated-type (For Input/Output) Serial Transmission System, refer to the Web Catalog and the Operation Manual. For details about part numbers of SI Units to be mounted, refer to pages 192-1 and 192-2. Please download the Operation Manual via SMC website, https://www.smcworld.com

❼ SUP/EXH block assembly

Nil	Internal pilot
S	Internal pilot, Built-in silencer
R	External pilot

∗: 3/5(E) port is plugged for the built-in silencer type.The silencer exhaust port is located on the opposite side of P, E port entry. (Example: When the P, E port entry is D side, the silencer exhaust port is U side.)

∗: When the built-in silencer type is used, keep the exhaust port from coming in direct contact with water or other liquids.

❽ P, E port size (One-touch fittings)

Symbol	SY3000	SY5000	SY7000
Nil	ø8	ø10	ø12
N	ø5/16"	ø3/8"	ø1/2"

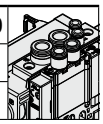

How to Order Manifold Assembly

Example (SS5Y3-12SAAN-□)

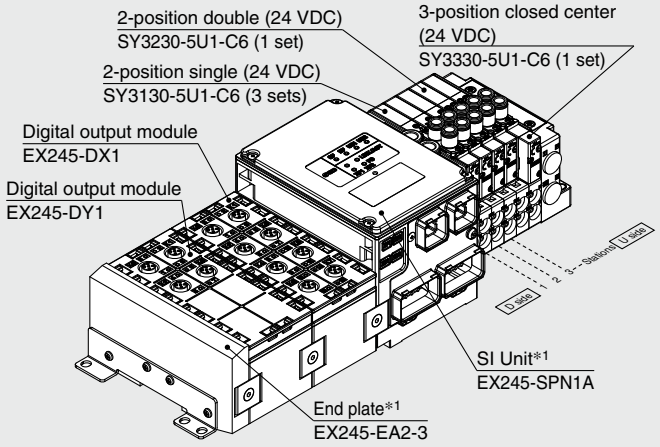

SS5Y3-12SAANY2-05DS-N·····1 set (Type 12 5-station manifold base part no.)
∗SY3130-5U1-C6·····3 sets (2-position single part no.)
∗SY3220-5U1-C6·····1 set (2-position double part no.)
∗SY3330-5U1-C6·····1 set (3-position closed center part no.)
∗EX245-DX1·····1set I/O module part no.
∗EX245-DY1·····1set I/O module part no.
The asterisk denotes the symbol for assembly. Prefix it to the part numbers of the valve etc.

- The valve arrangement is numbered as the 1st station from the D side.
- The I/O module station arrangement is numbered starting from the SI unit side.
- Under the manifold part number, state the valves to be mounted, then the I/O module in order from the 1st station as shown in the figure above. If the arrangement becomes complicated, specify on a manifold specification sheet.

∗1: Do not enter the SI Unit part number and the end plate part number together.

∗: When mixing top ported configurations, select from page 124-6. In this case, use caution as there is also output on the A and B port on base side. Specify on a manifold specification sheet if plugs are required on the A and B port on base side.

SMC

How to Order Valves (With mounting screw)

Refer to page 15 for valve specifications.

SY [3] [1] [3] [0] [ ] [ ] [ ] [ ] – [5] [ ] [ ] 1 – [C6] [ ] – [ ]

❶ ❷ ❸ ❹ ❺ ❻ ❼ ❽ ❾ ❿ ⓫ ⓬ ⓭

❸ Top mounted

❶ Series

3	SY3000
5	SY5000
7	SY7000

❷ Type of actuation

1	2-position	Single
2		Double
3	3-position	Closed center
4		Exhaust center
5		Pressure center
A∗1	4-position dual 3-port valve	N.C./N.C.
B∗1		N.O./N.O.
C∗1		N.C./N.O.

∗1: Select the rubber seal type for the 4-position dual 3-port valve.

❸ Seal type

0	Rubber seal
1	Metal seal

❹ Pilot type

Nil	Internal pilot
R	External pilot

❺ Back pressure check valve

Nil	None
H∗1	Built-in

∗1: Select the rubber seal type when the back pressure check valve is built-in. Manifold installed type is available if the back pressure check valve is required for a valve with metal seal. For ordering example, refer to page 212. However, it is not recommended to use the built-in valve type and the manifold installed type at the same time because it will reduce the flow.

∗: The built-in valve type back pressure check valve is not available for the 3-position type or the SY7000.

❻ Pilot valve option

Nil	Standard (0.7 MPa)
B	Quick response type (0.7 MPa)
K∗1	High pressure type (1.0 MPa)

∗1: Select the metal seal type for high pressure type.

❼ Coil type

Nil	Standard
T	With power saving circuit (Continuous duty type)∗1∗2

∗1: Be sure to select the power saving circuit type when the valve is continuously energized for long periods of time.

∗2: Be careful of the energizing time when the power saving circuit is selected. For details, refer to page 292.

❽ Rated voltage

5	24 VDC

❾ Light/surge voltage suppressor and common specification

	With light	Surge voltage suppressor	Common specification
R	—	●	Non-polar
U	●		
NS	—		Negative common
NZ	●		

∗: Select "NZ" for with the power saving circuit.

❿ Manual override

Nil: Non-locking push

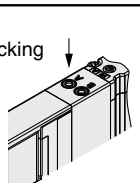

D: Push-turn locking (slotted)

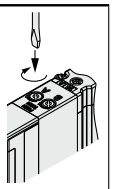

E: Push-turn locking (manual)

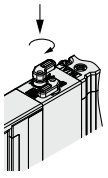

F: Slide locking (manual)



∗: Refer to page 34 for with the safety slide locking manual override.

⓫ A, B port size

Thread piping

Symbol	Port size	Applicable series
M5	M5 x 0.8	SY3000
01	1/8	SY5000
02	1/4	SY7000

One-touch fitting (Metric)

Symbol	A, B port	SY3000	SY5000	SY7000
C2	ø2	●	—	—
C3	ø3.2	●	—	—
C4	ø4	●	●	—
C6	ø6	●	●	●
C8	ø8	—	●	●
C10	ø10	—	—	●
C12	ø12	—	—	●

One-touch fitting (Inch)

Symbol	A, B port	SY3000	SY5000	SY7000
N1	ø1/8"	●	—	—
N3	ø5/32"	●	●	—
N7	ø1/4"	●	●	●
N9	ø5/16"	—	●	●
N11	ø3/8"	—	—	●

⓬ Thread type

Nil	Rc
F	G
N	NPT
T	NPTF

∗: Only Nil is available for M5.

⓭ Type of mounting screw

Nil	Round head combination screw
B	Hexagon socket head cap screw
K	Round head combination screw (Falling-out-prevention type)∗1
H	Hexagon socket head cap screw (Falling-out-prevention type)∗1

∗1: For "K" and "H", the valve body cover has a drop prevention construction to stop the mounting screws from falling out when the valve is removed for maintenance etc.

∗: **When ordering a valve individually, the base gasket is not included.**
Since the base gasket is attached to the manifold, please order the base gasket separately if it is needed for maintenance service.
Refer to page 367 for part numbers of the base gasket and mounting screw.

∗: Select "Nil" or "K" for the optional individual SUP/EXH spacer assembly, interface regulator or double check spacer assembly with residual pressure release valve.

Protective class class Ⅲ (Mark: ⧫)

Type 10
Side Ported

Type 11
Bottom Ported

Plug-in Connector Connecting Base

EX250

SY3000/5000/7000 Series

PROFIBUS DP compatible products (❸SI unit/Symbol: N) are to be discontinued as of November 2022. As a substitute, please consider the use of an EX600 series product (SI unit/Symbol: N). However, keep in mind that the product specifications, external appearance, etc., differ. For details, please contact your SMC sales representative.

How to Order Manifolds

Refer to pages 160 (SY5000) and 161 (SY7000) for the dimensions of Type 11/Bottom-ported type.

SS5Y [3] – [10] S [Q] [ ] [ ] – [05] [U] – [C6] [ ]

❶ ❷ ❸ ❹ ❺ ❻ ❼ ❽ ❾

❶ Series

3	SY3000
5	SY5000
7	SY7000

❷ Type

10	Side ported
11	Bottom ported*1

*1 The SY5000 manifold base is used for the bottom-ported SY3000. When ordering, refer to the "Plug-in Mixed Mounting Type Manifold" (from page 165).

❹ Input block stations

Nil	None
1	1 station
⋮	⋮
8	8 stations

* When not selecting an SI unit, the symbol will be "nil." The maximum number of stations is limited for the AS-Interface applicable SI unit.

❸ SI unit

0	Without SI unit		
Q	DeviceNet® (Negative common)		
N	PROFIBUS DP (Negative common)		
TA	AS-Interface (Negative common)	2 power supply systems	8 in/8 out, 31 slave modes
TB			4 in/4 out, 31 slave modes
TC		1 power supply system	8 in/8 out, 31 slave modes
TD			4 in/4 out, 31 slave modes
Y	CANopen (Negative common)		
ZE	EtherNet/IP™ (Negative common)		

* Ensure a match with the common specification of the valve to be used.
* Input block cannot be mounted without SI unit.
* The supply current from the SI unit of AS-Interface applicable 1 power supply system specification to the input block and valve is limited.

❺ Input block type

	PNP sensor input	NPN sensor input
Without input block	Nil	
M12, 2 inputs	A	D
M12, 4 inputs	B	E
M8, 4 inputs	C	F

* When not selecting an SI unit, the symbol will be "nil."

❻ Valve stations

Symbol	Stations	Note
02	2 stations	Double wiring*1
⋮	⋮	
16	16 stations	
02	2 stations	Specified layout*2 (Up to 32 solenoids available)
⋮	⋮	
24	24 stations	

*1 Double wiring: 2-position single, double, 3-position, and 4-position valves can be used on all manifold stations.
Use of a 2-position single solenoid will result in an unused control signal. If this is not desired, order with a specified layout.

*2 Specified layout: Indicate the wiring specifications on the manifold specification sheet. (Note that 2-position double, 3-position, and 4-position valves cannot be used where single wiring has been specified.)
When determining the number of valve stations, note that the maximum number of solenoids for the AS-Interface applicable SI Unit specification is as follows.
• 8 in/8 out specification: Max. 8 solenoids
• 4 in/4 out specification: Max. 4 solenoids

* This also includes the number of the blanking plate assembly.
* For the product without the SI unit (S0), note the maximum number of solenoids of the SI unit that will be mounted. If the layout is specified, indicate it on the manifold specification sheet.

How to Order Manifold Assembly

Example (SS5Y3-10S□-□)

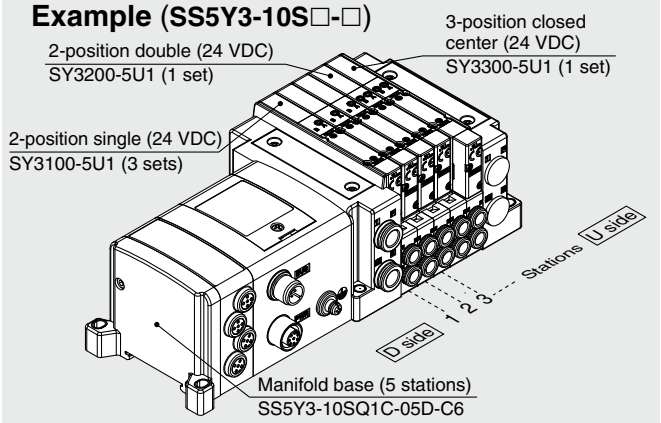

SS5Y3-10SQ1C-05D-C6 ··· 1 set (Type 10 5-station manifold base part no.)
***SY3100-5U1 ····· 3 sets (2-position single part no.)**
***SY3200-5U1 ····· 1 set (2-position double part no.)**
***SY3300-5U1 ····· 1 set (3-position closed center part no.)**
The asterisk denotes the symbol for the assembly. Prefix it to the part numbers of the valve, etc.

• For the valve arrangement, the valve closest to the D side is considered the 1st station.
• Under the manifold part number, state the valves to be mounted in order starting with the 1st station as shown in the figure above. If the arrangement becomes too complicated, specify the details on a manifold specification sheet.

* When mixing top-ported configurations, select from those listed on page 132. In such cases, use caution as there is also output on the A and B ports on the base side. Specify on the manifold specification sheet if plugs are required for the A and B ports on the base side.

❼ P, E port entry, SUP/EXH block assembly

P, E port entry	Internal pilot	Internal pilot, Built-in silencer	External pilot
U side (2 to 10 stations)	U	C	G
D side (2 to 10 stations)	D	E	H
Both sides (2 to 24 stations)	B	F	J

* 3/5(E) port is plugged for the built-in silencer type.
* When the built-in silencer type is used, keep the exhaust port from coming into direct contact with water or other liquids.

For details on the EX250 Integrated Type (For Input/Output) Serial Transmission System, refer to the **Web Catalog** and the Operation Manual. For the part numbers of the SI units to be mounted, refer to page 193. Please download the Operation Manual via the SMC website, https://www.smcworld.com

❽ A, B port size (Metric/One-touch fitting)

Symbol	A, B port		Type 10/Side ported			Type 11/Bottom ported	
			SY3000	SY5000	SY7000	SY5000	SY7000
C2	Straight	ø2	●	—	—	—	—
C3		ø3.2	●	—	—	—	—
C4		ø4	●	●	—	●	—
C6		ø6	●	●	●	●	●
C8		ø8	—	●	●	●	●
C10		ø10	—	—	●	—	●
C12		ø12	—	—	●	—	●
CM*1		Straight port, mixed sizes	●	●	●	●	●
L4	Elbow*2 Upward	ø4	●	●	—	—	—
L6		ø6	●	●	●	—	—
L8		ø8	—	●	●	—	—
L10		ø10	—	—	●	—	—
L12		ø12	—	—	●	—	—
B4	Elbow*2 Downward	ø4	●	●	—	—	—
B6		ø6	●	●	●	—	—
B8		ø8	—	●	●	—	—
B10		ø10	—	—	●	—	—
B12		ø12	—	—	●	—	—
LM*1		Elbow port, mixed sizes (Including upward and downward piping)	●	●	●	—	—
P, E port size (One-touch fittings)			ø8	ø10	ø12	ø10	ø12

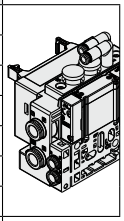
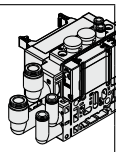
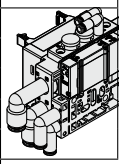

A, B port size (Inch/One-touch fitting)

Symbol	A, B port		Type 10/Side ported			Type 11/Bottom ported	
			SY3000	SY5000	SY7000	SY5000	SY7000
N1	Straight	ø1/8"	●	—	—	—	—
N3		ø5/32"	●	●	—	●	—
N7		ø1/4"	●	●	●	●	●
N9		ø5/16"	—	●	●	●	●
N11		ø3/8"	—	—	●	—	●
CM*1		Straight port, mixed sizes	●	●	●	●	●
LN3	Elbow*2 Upward	ø5/32"	●	—	—	—	—
LN7		ø1/4"	●	●	—	—	—
LN9		ø5/16"	—	●	—	—	—
LN11		ø3/8"	—	—	●	—	—
BN3	Elbow*2 Downward	ø5/32"	●	—	—	—	—
BN7		ø1/4"	●	●	—	—	—
BN9		ø5/16"	—	●	—	—	—
BN11		ø3/8"	—	—	●	—	—
LM*1		Elbow port, mixed sizes (Including upward and downward piping)	●	●	●	—	—
P, E port size (One-touch fittings)			ø5/16"	ø3/8"	ø1/2"	ø3/8"	ø1/2"

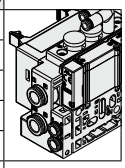
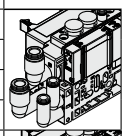
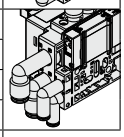

*1 Indicate the sizes on the manifold specification sheet in the case of "CM" or "LM."
The direction of P, E port fittings is the same as for the A, B port. If selecting "LM," indicate it on the manifold specification sheet for the P, E port fitting direction.

*2 To avoid interference with the body or piping, select a downward elbow port when mounting the optional spacer assembly (pages 204 to 206).

❾ Mounting and Option

Symbol	Mounting	Option	
		Name plate	Station number
Nil	Direct mounting	—	—
AA		●	●
BA		●	—
D□	DIN rail mounting	—	—
A□		●	●
B□		●	—

DIN Rail Option

Nil	Standard length	
0	Without DIN rail (with bracket)	
3	For 3 stations	Specify a longer rail than the total length of specified stations.
⋮	⋮	
24	For 24 stations	

* Enter the number of stations inside □ when it is larger than the number of valve stations. (Refer to "DIN Rail Option" above.)
* Only direct mounting is available for the type 11 bottom-ported type.
* Refer to page 295 for the fixation of DIN rail mounting type manifold.
* If the DIN rail must be mounted without an SI unit, select D0. Then, refer to L3 of the dimensions for the DIN rail length and order separately. (Refer to page 203 for the DIN rail part number.)

⚠ Protective class class Ⅲ (Mark: ⧫)

How to Order Valves (With mounting screw)

Refer to page 15 for valve specifications.

SY 3 1 0 0 □ □ □ □ – 5 □ □ 1 – □

❶ ❷ ❸ ❹ ❺ ❻ ❼ ❽ ❾ ❿ ⓫

❸ Base mounted

❶ Series

3	SY3000
5	SY5000
7	SY7000

❷ Type of actuation

1	2-position	Single
2		Double
3	3-position	Closed center
4		Exhaust center
5		Pressure center
A*1	4-position dual 3-port	N.C./N.C.
B*1		N.O./N.O.
C*1		N.C./N.O.

*1 Only the rubber seal type is available for the 4-position dual 3-port valve.

❸ Seal type

0	Rubber seal
1	Metal seal

❹ Pilot type

Nil	Internal pilot
R	External pilot

❺ Back pressure check valve (Built-in valve type)

Nil	None
H	Built-in

* Only the rubber seal type is available. A manifold installed type is available if a back pressure check valve with a metal seal is required. Refer to page 212 for ordering examples. However, it is not recommended to use the built-in valve type and the manifold installed type at the same time because it will reduce the flow.
* The built-in valve type back pressure check valve is not available for the 3-position type or the SY7000.

❻ Pilot valve option

Nil	Standard (0.7 MPa)
B	Quick response type (0.7 MPa)
K*1	High pressure type (1.0 MPa)

*1 Only the metal seal type is available for the high pressure type.

❼ Coil type

Nil	Standard
T	With power saving circuit (Continuous duty type)

* Be sure to select the power saving circuit type if the valve is to be continuously energized for long periods of time.
* Be careful of the energizing time when the power saving circuit is selected. Refer to page 292 for details.

❽ Rated voltage

5	24 VDC

❾ Light/surge voltage suppressor and common specification

Symbol	With light	Surge voltage suppressor	Common specification
R	—	●	Non-polar
U	●		
S	—		Positive common
Z	●		
NS	—		Negative common
NZ	●		

* "R" and "U" are applicable for every SI unit. However, "S" and "Z" can be used only for CC-Link applicable unit and "NS" and "NZ" are for units which are not CC-Link applicable.
* Only "Z" and "NZ" types are available with a power saving circuit.

❿ Manual override

Nil: Non-locking push type	**D**: Push-turn locking slotted type
E: Push-turn locking lever type	**F**: Slide locking type

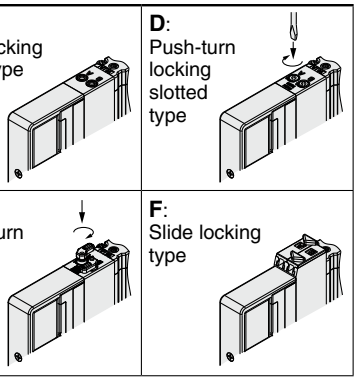

* Refer to page 34 for the safety slide locking manual override.

⓫ Type of mounting screw

Nil	Round head combination screw
B	Hexagon socket head cap screw
K	Round head combination screw (Drop prevention type)
H	Hexagon socket head cap screw (Drop prevention type)

* For "K" and "H," the valve body cover has a drop prevention construction to stop the mounting screws from falling out when the valve is removed for maintenance, etc.
* **When ordering a valve individually, the base gasket is not included.**
  Since the base gasket is attached to the manifold, please order the base gasket separately if it is needed for maintenance. Refer to page 198 for base gasket and mounting screw part numbers.
* "B" and "H" cannot be selected for the individual SUP/EXH spacer assembly, interface regulator, or double check spacer assembly with residual pressure release valve.

⚠ Protective class class Ⅲ (Mark: Ⅲ)

Dimensions: SY3000 Series

SS5Y3-10S□□□-Stations U/D/B - C2/C3, N1/C4, N3/C6, N7 (D)

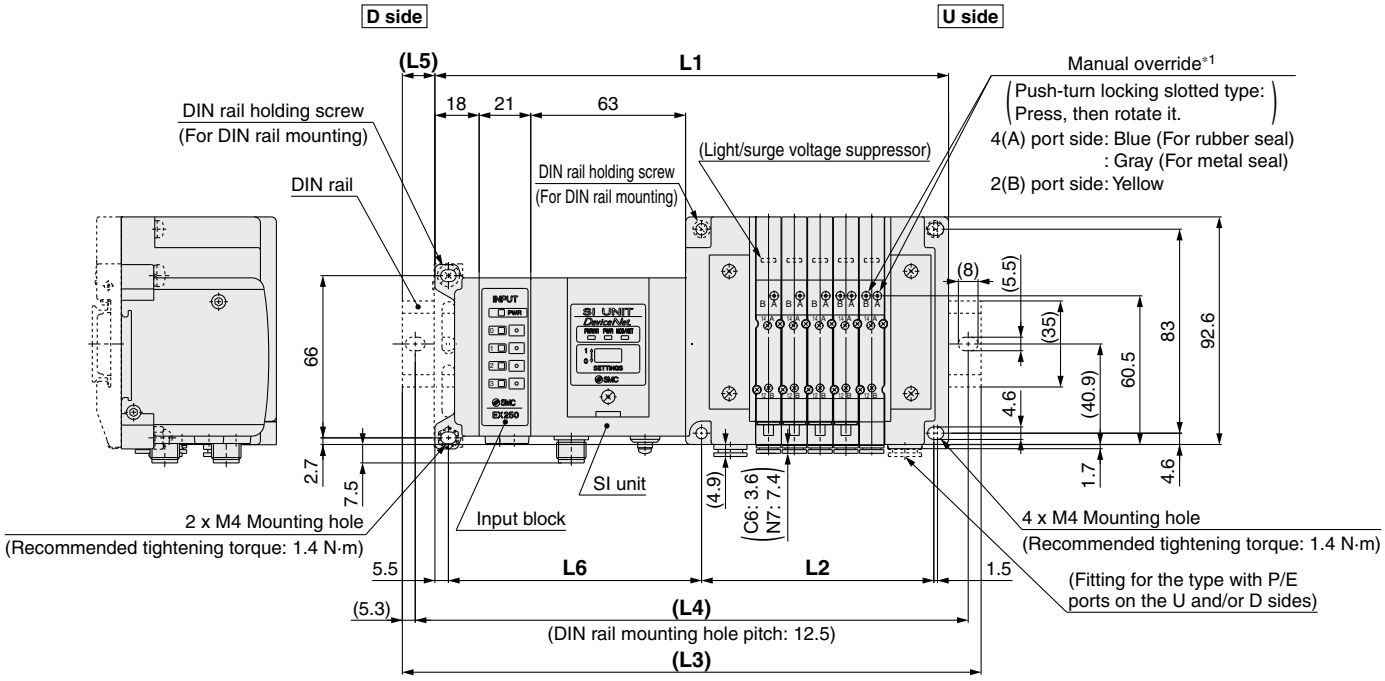

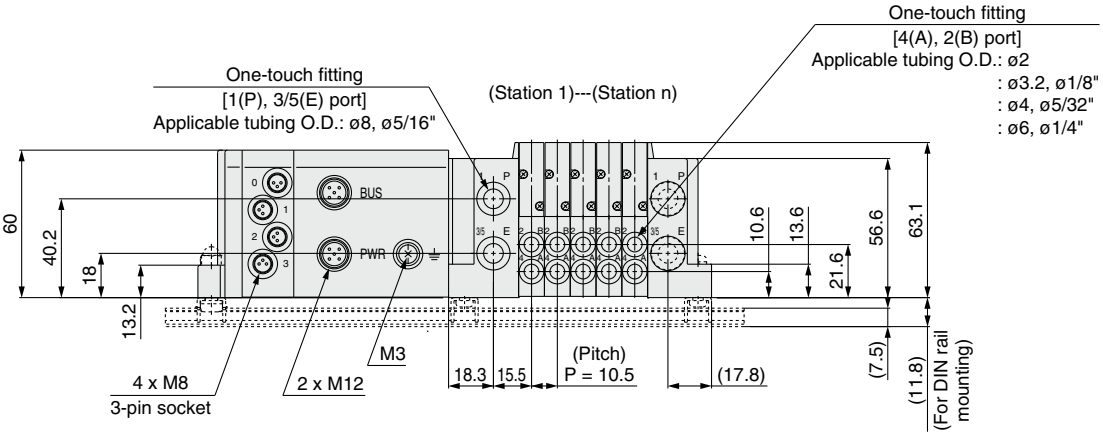

L1 = 10.5 x n1 + 135.5 + 21 x n2
L2 = 10.5 x n1 + 42
L4 = L3 – 10.5
L5 = (L3 – L1)/2
L6 = 21 x n2 + 82

n1: Valve stations
n2: Input block stations

*1 Refer to page 157 for dimensions of the external pilot, silencer, elbow fittings, and slide locking manual override.
* These figures show the "SS5Y3-10SQ1A-05D-C6."
* Refer to page 162 for dimensions of A or B port top-ported type.

L3: DIN Rail Overall Length

Input block stations (n2) \ Valve stations (n1)	2	3	4	5	6	7	8	9	10	11	12	13	14	15	16	17	18	19	20	21	22	23	24
0	185.5	198	210.5	223	223	235.5	248	260.5	273	285.5	285.5	298	310.5	323	335.5	348	348	360.5	373	385.5	398	410.5	423
1	210.5	223	223	235.5	248	260.5	273	285.5	285.5	298	310.5	323	335.5	348	348	360.5	373	385.5	398	410.5	423	423	435.5
2	223	235.5	248	260.5	273	285.5	285.5	298	310.5	323	335.5	348	348	360.5	373	385.5	398	410.5	423	423	435.5	448	460.5
3	248	260.5	273	285.5	285.5	298	310.5	323	335.5	348	348	360.5	373	385.5	398	410.5	423	423	435.5	448	460.5	473	485.5
4	273	285.5	285.5	298	310.5	323	335.5	348	348	360.5	373	385.5	398	410.5	423	423	435.5	448	460.5	473	485.5	485.5	498
5	285.5	298	310.5	323	335.5	348	348	360.5	373	385.5	398	410.5	423	423	435.5	448	460.5	473	485.5	485.5	498	510.5	523
6	310.5	323	335.5	348	348	360.5	373	385.5	398	410.5	423	423	435.5	448	460.5	473	485.5	485.5	498	510.5	523	535.5	548
7	335.5	348	348	360.5	373	385.5	398	410.5	423	423	435.5	448	460.5	473	485.5	485.5	498	510.5	523	535.5	548	548	560.5
8	348	360.5	373	385.5	398	410.5	423	423	435.5	448	460.5	473	485.5	485.5	498	510.5	523	535.5	548	548	560.5	573	585.5

Plug-in Connector Connecting Base | Type 10/Side Ported | EX250

Dimensions: SY5000 Series

SS5Y5-10S□□□-Stations U C4, N3 / D C6, N7 / B C8, N9 (D)

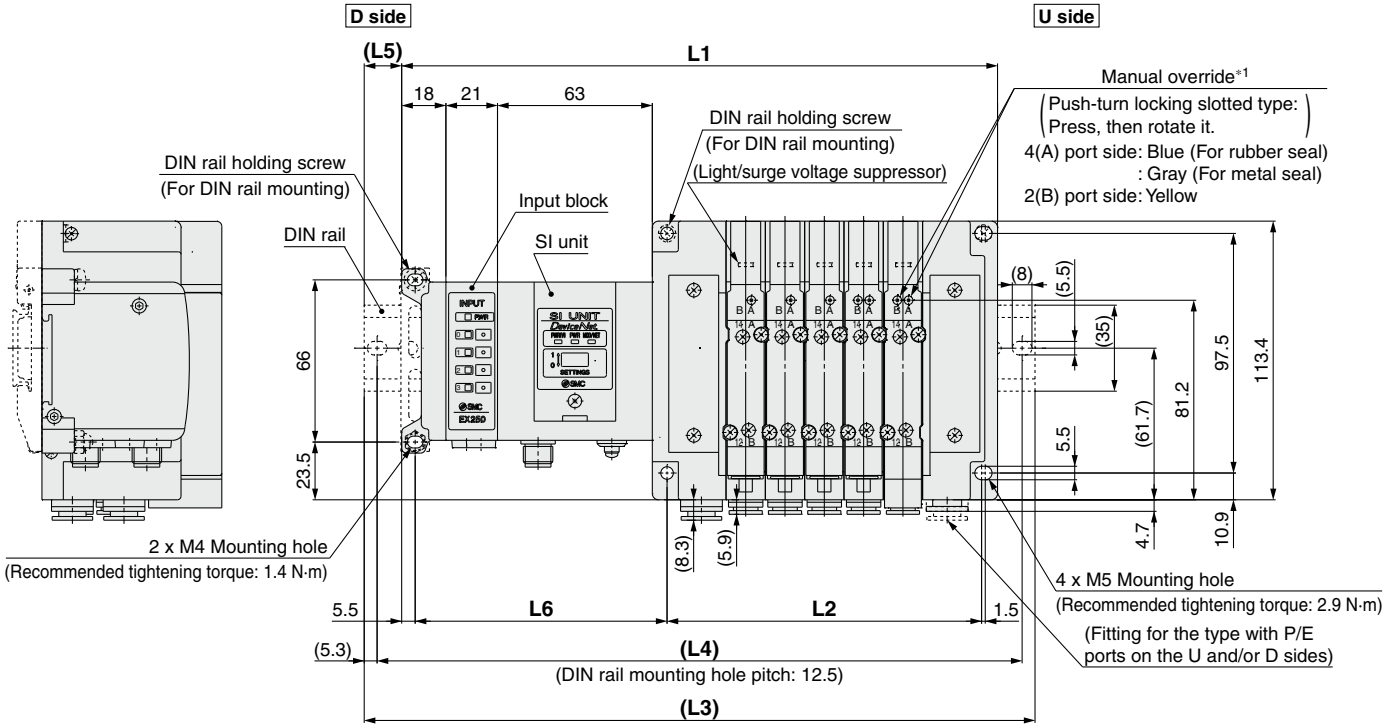

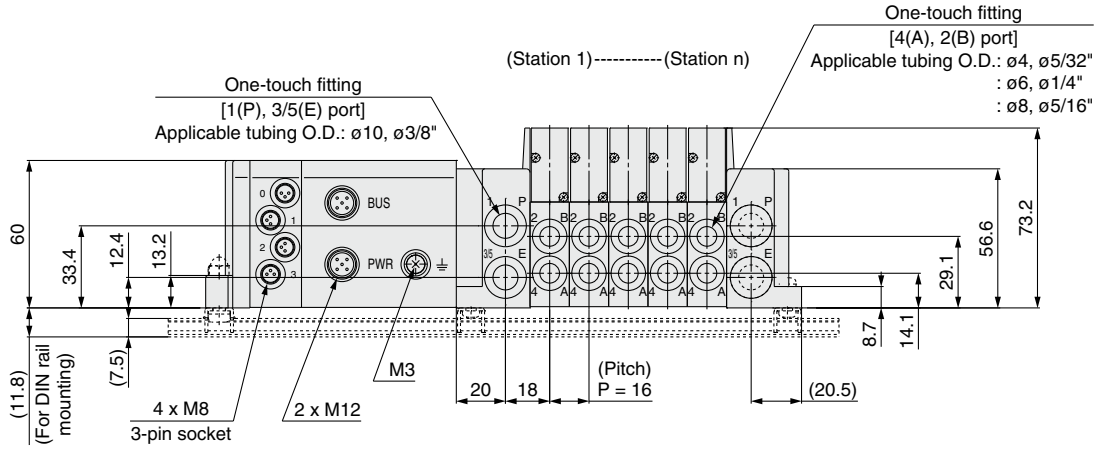

L1 = 16 x n1 + 141.5 + 21 x n2
L2 = 16 x n1 + 48
L4 = L3 – 10.5
L5 = (L3 – L1)/2
L6 = 21 x n2 + 81.5

n1: Valve stations
n2: Input block stations

∗1 Refer to page 158 for dimensions of the external pilot, silencer, elbow fittings, and slide locking manual override.
∗ These figures show the "SS5Y5-10SQ1A-05D-C8."
∗ Refer to page 163 for dimensions of A or B port top-ported type.

L3: DIN Rail Overall Length

Input block stations (n2) \ Valve stations (n1)	2	3	4	5	6	7	8	9	10	11	12	13	14	15	16	17	18	19	20	21	22	23	24
0	198	223	235.5	248	273	285.5	298	310.5	335.5	348	360.5	373	398	410.5	423	448	460.5	473	485.5	510.5	523	535.5	560.5
1	223	235.5	260.5	273	285.5	298	323	335.5	348	373	385.5	398	410.5	435.5	448	460.5	485.5	498	510.5	523	548	560.5	573
2	248	260.5	273	298	310.5	323	335.5	360.5	373	385.5	410.5	423	435.5	448	473	485.5	498	523	535.5	548	560.5	585.5	598
3	260.5	285.5	298	310.5	335.5	348	360.5	373	398	410.5	423	448	460.5	473	485.5	510.5	523	535.5	548	573	585.5	598	623
4	285.5	298	323	335.5	348	373	385.5	398	410.5	435.5	448	460.5	473	498	510.5	523	548	560.5	573	585.5	610.5	623	635.5
5	310.5	323	335.5	360.5	373	385.5	398	423	435.5	448	473	485.5	498	510.5	535.5	548	560.5	585.5	598	610.5	623	648	660.5
6	323	348	360.5	373	398	410.5	423	435.5	460.5	473	485.5	510.5	523	535.5	548	573	585.5	598	623	635.5	648	660.5	685.5
7	348	360.5	385.5	398	410.5	435.5	448	460.5	473	498	510.5	523	548	560.5	573	585.5	610.5	623	635.5	648	673	685.5	698
8	373	385.5	398	423	435.5	448	473	485.5	498	510.5	535.5	548	560.5	573	598	610.5	623	648	660.5	673	685.5	710.5	723

Plug-in Connector Connecting Base | Type 10/Side Ported | EX250

Dimensions: SY7000 Series

SS5Y7-10S□□□-Stations U/D/B - C6, N7 / C8, N9 / C10, N11 / C12 (D)

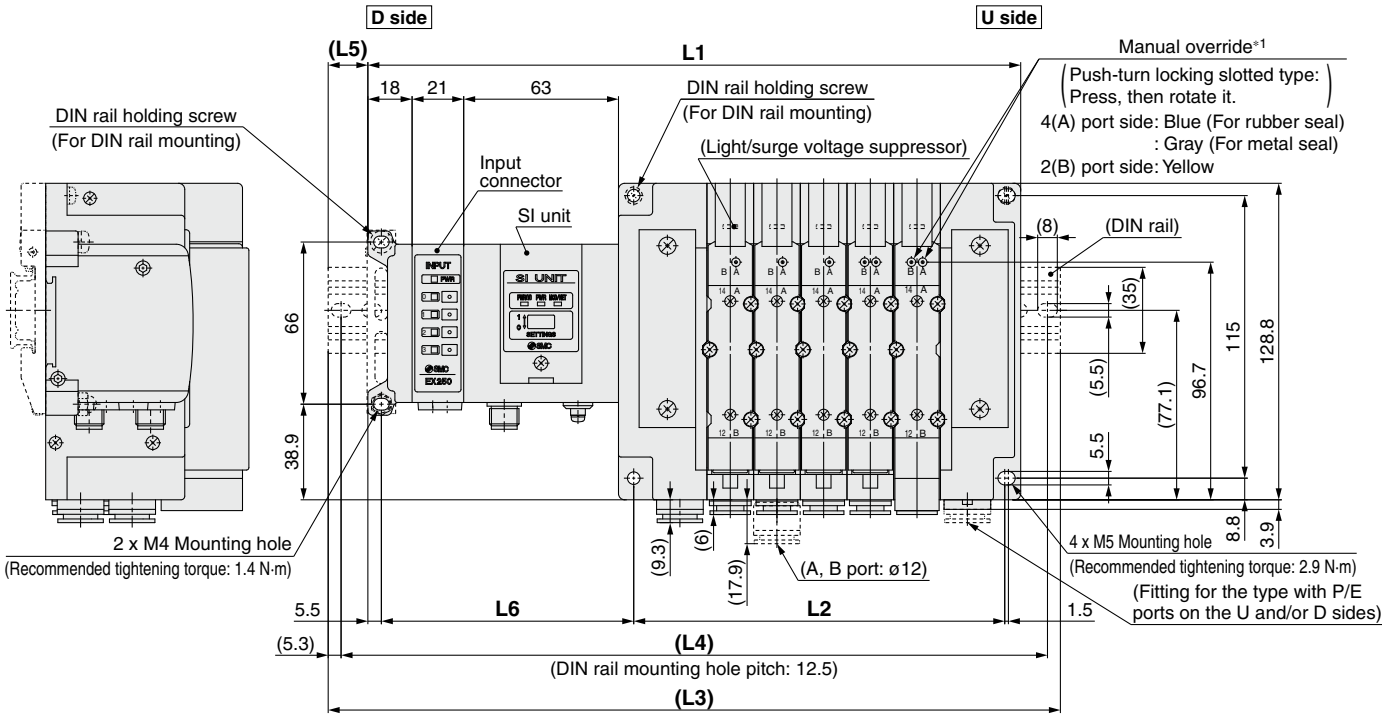

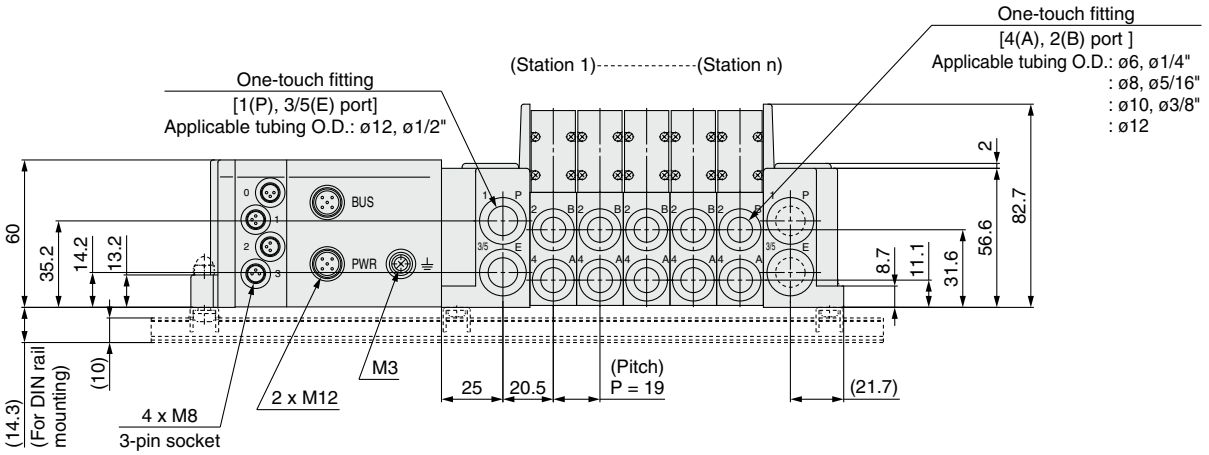

L1 = 19 x n1 + 149.7 + 21 x n2
L2 = 19 x n1 + 56
L4 = L3 – 10.5
L5 = (L3 – L1)/2
L6 = 21 x n2 + 81.7

n1: Valve stations
n2: Input block stations

*1 Refer to page 159 for dimensions of the external pilot, silencer, elbow fittings, and slide locking manual override.
* These figures show the "SS5Y7-10SQ1A-05D-C10."
* Refer to page 164 for dimensions of A or B port top-ported type.

L3: DIN Rail Overall Length

Valve stations (n1) / I/O Unit stations (n2)	2	3	4	5	6	7	8	9	10	11	12	13	14	15	16	17	18	19	20	21	22	23	24
0	223	235.5	260.5	273	298	310.5	335.5	348	373	385.5	410.5	423	448	460.5	485.5	498	523	535.5	560.5	573	598	610.5	635.5
1	235.5	260.5	273	298	310.5	335.5	348	373	385.5	410.5	423	448	460.5	485.5	498	523	548	560.5	585.5	598	623	635.5	660.5
2	260.5	273	298	310.5	335.5	348	373	398	410.5	435.5	448	473	485.5	510.5	523	548	560.5	585.5	598	623	635.5	660.5	673
3	285.5	298	323	335.5	360.5	373	398	410.5	435.5	448	473	485.5	510.5	523	548	560.5	585.5	598	623	635.5	660.5	673	698
4	298	323	335.5	360.5	373	398	410.5	435.5	448	473	485.5	510.5	523	548	573	585.5	610.5	623	648	660.5	685.5	698	723
5	323	335.5	360.5	373	398	423	435.5	460.5	473	498	510.5	535.5	548	573	585.5	610.5	623	648	660.5	685.5	698	723	735.5
6	348	360.5	385.5	398	423	435.5	460.5	473	498	510.5	535.5	548	573	585.5	610.5	623	648	660.5	685.5	698	723	748	760.5
7	360.5	385.5	398	423	435.5	460.5	473	498	510.5	535.5	548	573	598	610.5	635.5	648	673	685.5	710.5	723	748	760.5	785.5
8	385.5	398	423	448	460.5	485.5	498	523	535.5	560.5	573	598	610.5	635.5	648	673	685.5	710.5	723	748	760.5	785.5	798

Plug-in Connector Connecting Base

EX250

Type 12
Top Ported

SY3000/5000/7000 Series

How to Order Manifolds

SS5Y 3 – 12S Q □ □ – 05 U – □ □

❶ ❷ ❸ ❹ ❺ ❻ ❼ ❽

Refer to pages 162 to 164 for the dimensions of Type 12/Top-ported type.

❶ Series

3	SY3000
5	SY5000
7	SY7000

❷ SI unit

0	Without SI unit		
Q	DeviceNet® (Negative common)		
N	PROFIBUS DP (Negative common)		
TA	AS-Interface (Negative common)	2 power supply systems	8 in/8 out, 31 slave modes
TB			4 in/4 out, 31 slave modes
TC		1 power supply system	8 in/8 out, 31 slave modes
TD			4 in/4 out, 31 slave modes
Y	CANopen (Negative common)		
ZE	EtherNet/IP™ (Negative common)		

∗ Ensure a match with the common specification of the valve to be used.
∗ Input block cannot be mounted without SI unit.
∗ The supply current from the SI unit of AS-Interface applicable 1 power supply system specification to the input block and valve is limited.

❸ Input block stations

Nil	None
1	1 station
⋮	⋮
8	8 stations

∗ When not selecting an SI unit, the symbol will be "nil." The maximum number of stations is limited for the AS-Interface applicable SI unit.

❹ Input block type

	PNP sensor input	NPN sensor input
Without input block	**Nil**	
M12, 2 inputs	**A**	**D**
M12, 4 inputs	**B**	**E**
M8, 4 inputs	**C**	**F**

∗ When not selecting an SI unit, the symbol will be "nil."

❺ Valve stations

Symbol	Stations	Note
02	2 stations	Double wiring∗1
⋮	⋮	
16	16 stations	
02	2 stations	Specified layout∗2 (Up to 32 solenoids available)
⋮	⋮	
24	24 stations	

∗1 Double wiring: 2-position single, double, 3-position, and 4-position valves can be used on all manifold stations.
Use of a 2-position single solenoid will result in an unused control signal. If this is not desired, order with a specified layout.
∗2 Specified layout: Indicate the wiring specifications on the manifold specification sheet. (Note that 2-position double, 3-position, and 4-position valves cannot be used where single wiring has been specified.)
When determining the number of valve stations, note that the maximum number of solenoids for the AS-Interface applicable SI unit specification is as follows.
• 8 in/8 out specification: Max. 8 solenoids
• 4 in/4 out specification: Max. 4 solenoids
∗ This also includes the number of the blanking plate assembly.
∗ For the product without the SI unit (S0), note the maximum number of solenoids of the SI unit that will be mounted. If the layout is specified, indicate it on the manifold specification sheet.

How to Order Manifold Assembly

Example (SS5Y3-12S□-□)

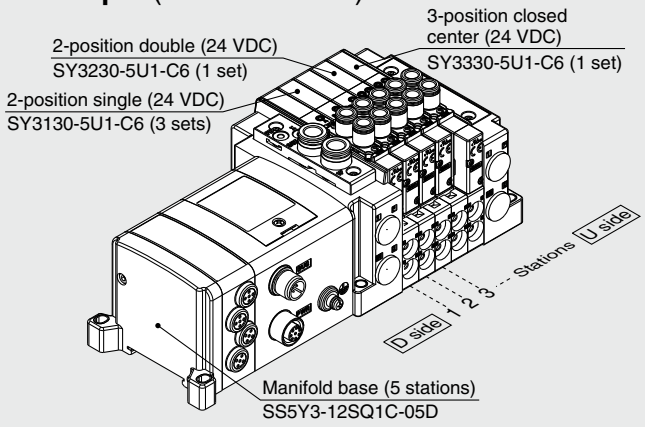

SS5Y3-12SQ1C-05D ··· 1 set (Type 12 5-station manifold base part no.)
∗SY3130-5U1-C6 ····· 3 sets (2-position single part no.)
∗SY3230-5U1-C6 ····· 1 set (2-position double part no.)
∗SY3330-5U1-C6 ····· 1 set (3-position closed center part no.)
The asterisk denotes the symbol for the assembly. Prefix it to the part numbers of the valve, etc.

• For the valve arrangement, the valve closest to the D side is considered the 1st station.
• Under the manifold part number, state the valves to be mounted in order starting with the 1st station as shown in the figure above. If the arrangement becomes too complicated, specify the details on a manifold specification sheet.

❻ P, E port entry, SUP/EXH block assembly

P, E port entry	Internal pilot	Internal pilot, Built-in silencer	External pilot
U side (2 to 10 stations)	**U**	**C**∗1	**G**
D side (2 to 10 stations)	**D**	**E**∗1	**H**
Both sides (2 to 24 stations)	**B**	—	**J**

∗1 For SUP/EXH block assembly specifications, built-in silencer types will have P port entry stipulated.
∗ The P and E ports are only available on the U and D sides for the built-in silencer type. 3/5(E) port is plugged. The silencer exhaust port is located on the opposite side of the P and E port entry. (Example: When the P and E port entry is on the D side, the silencer exhaust port is on the U side.)
∗ When the built-in silencer type is used, keep the exhaust port from coming into direct contact with water or other liquids.

❼ P, E port size (One-touch fittings)

Symbol	SY3000	SY5000	SY7000
Nil	ø8	ø10	ø12
N	ø5/16"	ø3/8"	ø1/2"

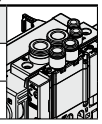

∗ For N, sizes are in inches.

❽ Mounting

Nil	Direct mounting	
D	DIN rail mounting (With DIN rail)	
D0	DIN rail mounting (Without DIN rail)	
D3	For 3 stations	Specify a length longer than that of the standard rail.
⋮	⋮	
D24	For 24 stations	

∗ If the DIN rail must be mounted without an SI unit, select D0. Then, refer to L3 of the dimensions for the DIN rail length and order separately. (Refer to page 203 for the DIN rail part number.)
∗ Refer to page 295 for the fixation of DIN rail mounting type manifold.

For details on the EX250 Integrated Type (For Input/Output) Serial Transmission System, refer to the **Web Catalog** and the Operation Manual. For the part numbers of the SI units to be mounted, refer to page 193. Please download the Operation Manual via the SMC website, https://www.smcworld.com

SMC

How to Order Valves (With mounting screw)

Refer to page 15 for valve specifications.

SY 3 1 3 0 □ □ □ □ – 5 □ □ 1 – C6 □ – □

❶ ❷ ❸ ❹ ❺ ❻ ❼ ❽ ❾ ❿ ⓫ ⓬ ⓭

❸: Top ported

❶ Series

3	SY3000
5	SY5000
7	SY7000

❷ Type of actuation

1	2-position	Single
2		Double
3	3-position	Closed center
4		Exhaust center
5		Pressure center
A*1	4-position dual 3-port	N.C./N.C.
B*1		N.O./N.O.
C*1		N.C./N.O.

*1 Only the rubber seal type is available for the 4-position dual 3-port valve.

❸ Seal type

0	Rubber seal
1	Metal seal

❹ Pilot type

Nil	Internal pilot
R	External pilot

❺ Back pressure check valve (Built-in valve type)

Nil	None
H	Built-in

* Only the rubber seal type is available. A manifold installed type is available if a back pressure check valve with a metal seal is required. Refer to page 212 for ordering examples. However, it is not recommended to use the built-in valve type and the manifold installed type at the same time because it will reduce the flow.
* The built-in valve type back pressure check valve is not available for the 3-position type or the SY7000.

❻ Pilot valve option

Nil	Standard (0.7 MPa)
B	Quick response type (0.7 MPa)
K*1	High pressure type (1.0 MPa)

*1 Only the metal seal type is available for the high pressure type.

❼ Coil type

Nil	Standard
T	With power saving circuit (Continuous duty type)

* Be sure to select the power saving circuit type if the valve is to be continuously energized for long periods of time.
* Be careful of the energizing time when the power saving circuit is selected. Refer to page 292 for details.

❽ Rated voltage

5	24 VDC

❾ Light/surge voltage suppressor and common specification

Symbol	With light	Surge voltage suppressor	Common specification
R	—	●	Non-polar
U	●		
S	—		Positive common
Z	●		
NS	—		Negative common
NZ	●		

* "R" and "U" are applicable for every SI unit.
* Only "Z" and "NZ" types are available with a power saving circuit.

❿ Manual override

Nil: Non-locking push type

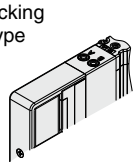

D: Push-turn locking slotted type

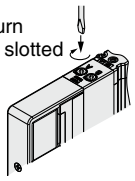

E: Push-turn locking lever type

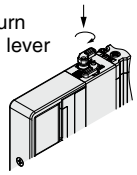

F: Slide locking type

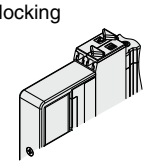

* Refer to page 34 for the safety slide locking manual override.

⓫ A, B port size

Thread piping

Symbol	Port size	Applicable series
M5	M5 x 0.8	SY3000
01	1/8	SY5000
02	1/4	SY7000

One-touch fitting (Metric)

Symbol	A, B port	SY3000	SY5000	SY7000
C2	ø2	●	—	—
C3	ø3.2	●	—	—
C4	ø4	●	●	—
C6	ø6	●	●	●
C8	ø8	—	●	●
C10	ø10	—	—	●
C12	ø12	—	—	●

One-touch fitting (Inch)

Symbol	A, B port	SY3000	SY5000	SY7000
N1	ø1/8"	●	—	—
N3	ø5/32"	●	●	—
N7	ø1/4"	●	●	●
N9	ø5/16"	—	●	●
N11	ø3/8"	—	—	●

⓬ Thread type

Nil	Rc
F	G
N	NPT
T	NPTF

* Only Nil is available for M5.

⓭ Type of mounting screw

Nil	Round head combination screw
B	Hexagon socket head cap screw
K	Round head combination screw (Drop prevention type)
H	Hexagon socket head cap screw (Drop prevention type)

* For "K" and "H," the valve body cover has a drop prevention construction to stop the mounting screws from falling out when the valve is removed for maintenance, etc.
* **When ordering a valve individually, the base gasket is not included.**
  Since the base gasket is attached to the manifold, please order the base gasket separately if it is needed for maintenance. Refer to page 198 for base gasket and mounting screw part numbers.
* "B" and "H" cannot be selected for the individual SUP/EXH spacer assembly or interface regulator.

Protective class class Ⅲ (Mark: ⧫)

Type 10
Side Ported

Type 11
Bottom Ported

Plug-in Connector Connecting Base

EX260

SY3000/5000/7000 Series

Refer to page 135-1 for details on manifolds that support safety communication (PROFIsafe).

How to Order Manifolds

Refer to pages 160 (SY5000) and 161 (SY7000) for the dimensions of Type 11/Bottom-ported type.

SS5Y **3** – **10** **S** **NAN** – **05** **U** **□** – **C6** **□**

❶ ❷ ❸ ❹ ❺ ❻ ❼ ❽

❶ Series

3	SY3000
5	SY5000
7	SY7000

❷ Type

10	Side ported
11	Bottom ported∗1

∗1 The SY5000 manifold base is used for the bottom-ported SY3000. When ordering, refer to the "Plug-in Mixed Type Manifold" (from page 165).

❸ SI unit specifications

(Output polarity, Protocol, Number of outputs, Communication connector)

Symbol (Output polarity)		Protocol	Number of outputs	Communication connector
Positive common (NPN)	Negative common (PNP)			
0∗1		Without SI unit		
QA	**QAN**	DeviceNet®	32	M12
QB	**QBN**		16	
NA	**NAN**	PROFIBUS DP	32	M12
NB	**NBN**		16	
NC	**NCN**		32	∗4 D-sub
ND	**NDN**		16	
VA	**VAN**	CC-Link	32	M12
VB	**VBN**		16	
DA	**DAN**	EtherCAT	32	M12
DB	**DBN**		16	
FA	**FAN**	PROFINET	32	M12
FB	**FBN**		16	
EA	**EAN**	EtherNet/IP™	32	M12
EB	**EBN**		16	
—∗3	**GAN**	Ethernet POWERLINK	32	M12
—∗3	**GBN**		16	
—∗3	**KAN**	IO-Link	32∗5	M12

∗1 Without SI unit, the output polarity is decided by the SI unit used. Ensure a match with the common specification of the valves to be used.
∗2 DIN rail cannot be mounted without SI unit.
∗3 Positive common (NPN) type is not applicable.
∗4 IP40 for the D-sub applicable communication connector specification
∗5 Only the 32 outputs type is available.

❹ Valve stations

In the case of the 32-output SI unit

Symbol	Stations	Note
02	2 stations	Double wiring∗1
⋮	⋮	
16	16 stations	
02	2 stations	Specified layout∗2 (Up to 32 solenoids available)
⋮	⋮	
24	24 stations	

In the case of the 16-output SI unit

Symbol	Stations	Note
02	2 stations	Double wiring∗1
⋮	⋮	
08	8 stations	
02	2 stations	Specified layout∗2 (Up to 16 solenoids available)
⋮	⋮	
16	16 stations	

∗1 Double wiring: 2-position single, double, 3-position, and 4-position valves can be used on all manifold stations. Use of a 2-position single solenoid will result in an unused control signal. If this is not desired, order with a specified layout
∗2 Specified layout: Indicate the wiring specifications on the manifold specification sheet. (Note that 2-position double, 3-position, and 4-position valves cannot be used where single wiring has been specified.)
∗ This also includes the number of the blanking plate assembly.
∗ For the model without the SI unit (S0), note the maximum number of solenoids of the SI unit that will be mounted. If the layout is specified, indicate it on the manifold specification sheet.

❺ P, E port entry

U	U side (2 to 10 stations)
D	D side (2 to 10 stations)
B	Both sides (2 to 24 stations)

❻ SUP/EXH block assembly

Nil	Internal pilot
S	Internal pilot, Built-in silencer
R	External pilot

∗ 3/5(E) port is plugged for the built-in silencer type.
∗ When the built-in silencer type is used, keep the exhaust port from coming into direct contact with water or other liquids.

Refer to the page on the right for ❼.

❽ Mounting and Option

Symbol	Mounting	Option	
		Name plate	Station number
Nil	Direct mounting	—	—
AA		●	●
BA		●	—
D□	DIN rail mounting	—	—
A□		●	●
B□		●	—

∗ Enter the number of stations inside □ when it is larger than the number of valve stations. (Refer to "DIN Rail Option" below.)
∗ Only direct mounting is available for the type 11 bottom-ported type.
∗ Refer to page 295 for the fixation of DIN rail mounting type manifold.

DIN Rail Option

Nil	Standard length	
0	Without DIN rail (with bracket)	
3	For 3 stations	Specify a longer rail than the total length of specified stations.
⋮	⋮	
24	For 24 stations	

∗ If the DIN rail must be mounted without an SI unit, select D0. Then, refer to L3 of the dimensions for the DIN rail length and order separately. (Refer to page 203 for the DIN rail part number.)

For details on the EX260 Integrated Type (For Output) Serial Transmission System, refer to the **Web Catalog** and the Operation Manual. For the part numbers of the SI units to be mounted, refer to page 194. Please download the Operation Manual via the SMC website, https://www.smcworld.com

❼ A, B port size (Metric/One-touch fitting)

Symbol	A, B port		Type 10/Side ported			Type 11/Bottom ported	
			SY3000	SY5000	SY7000	SY5000	SY7000
C2	Straight	ø2	●	—	—	—	—
C3		ø3.2	●	—	—	—	—
C4		ø4	●	●	—	●	—
C6		ø6	●	●	●	●	●
C8		ø8	—	●	●	●	●
C10		ø10	—	—	●	—	●
C12		ø12	—	—	●	—	●
CM*1		Straight port, mixed sizes	●	●	●	●	●
L4	Elbow*2 Upward	ø4	●	●	—	—	—
L6		ø6	●	●	●	—	—
L8		ø8	—	●	●	—	—
L10		ø10	—	—	●	—	—
L12		ø12	—	—	●	—	—
B4	Elbow*2 Downward	ø4	●	●	—	—	—
B6		ø6	●	●	●	—	—
B8		ø8	—	●	●	—	—
B10		ø10	—	—	●	—	—
B12		ø12	—	—	●	—	—
LM*1		Elbow port, mixed sizes (Including upward and downward piping)	●	●	●	—	—
P, E port size (One-touch fittings)			ø8	ø10	ø12	ø10	ø12

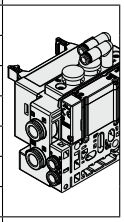
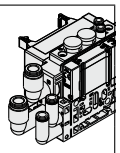
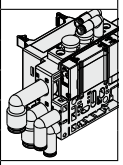

A, B port size (Inch/One-touch fitting)

Symbol	A, B port		Type 10/Side ported			Type 11/Bottom ported	
			SY3000	SY5000	SY7000	SY5000	SY7000
N1	Straight	ø1/8"	●	—	—	—	—
N3		ø5/32"	●	●	—	●	—
N7		ø1/4"	●	●	●	●	●
N9		ø5/16"	—	●	●	●	●
N11		ø3/8"	—	—	●	—	●
CM*1		Straight port, mixed sizes	●	●	●	●	●
LN3	Elbow*2 Upward	ø5/32"	●	—	—	—	—
LN7		ø1/4"	●	●	—	—	—
LN9		ø5/16"	—	●	—	—	—
LN11		ø3/8"	—	—	●	—	—
BN3	Elbow*2 Downward	ø5/32"	●	—	—	—	—
BN7		ø1/4"	●	●	—	—	—
BN9		ø5/16"	—	●	—	—	—
BN11		ø3/8"	—	—	●	—	—
LM*1		Elbow port, mixed sizes (Including upward and downward piping)	●	●	●	—	—
P, E port size (One-touch fittings)			ø5/16"	ø3/8"	ø1/2"	ø3/8"	ø1/2"

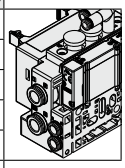
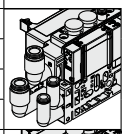
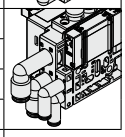

*1 Indicate the sizes on the manifold specification sheet in the case of "CM" or "LM."
The direction of P, E port fittings is the same as for the A, B port. If selecting "LM," indicate it on the manifold specification sheet for the P, E port fitting direction.

*2 To avoid interference with the body or piping, select a downward elbow port when mounting the optional spacer assembly (pages 204 to 206).

How to Order Manifold Assembly

Example (SS5Y3-10SNAN-□)

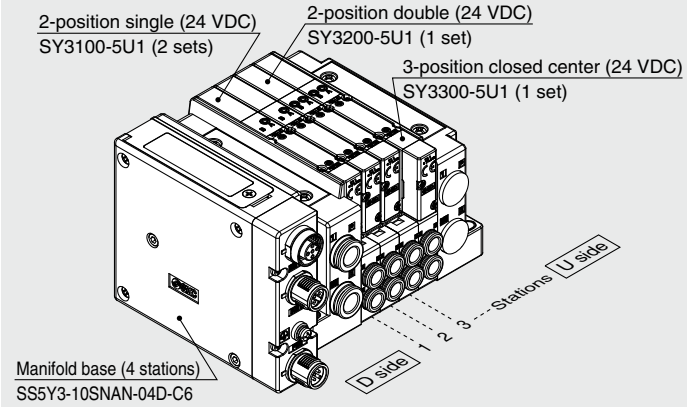

SS5Y3-10SNAN-04D-C6···1 set (Type 10 4-station manifold base part no.)
***SY3100-5U1**·····2 sets (2-position single part no.)**
***SY3200-5U1**·····1 set (2-position double part no.)**
***SY3300-5U1**·····1 set (3-position closed center part no.)**
→The asterisk denotes the symbol for the assembly. Prefix it to the part numbers of the valve, etc.

- For the valve arrangement, the valve closest to the D side is considered the 1st station.
- Under the manifold part number, state the valves to be mounted in order starting with the 1st station as shown in the figure above. If the arrangement becomes too complicated, specify the details on a manifold specification sheet.

* When mixing top-ported configurations, select from those listed on page 140. Specify on the manifold specification sheet if plugs are required for the A and B ports on the manifold.

Protective class class Ⅲ (Mark: ⧫)

How to Order Valves (With mounting screw)

Refer to page 15 for valve specifications.

SY 3 1 0 0 □ □ □ □ – 5 □ □ 1 – □

❶ ❷ ❸ ❹ ❺ ❻ ❼ ❽ ❾ ❿ ⓫

❸ Base mounted

❶ Series

3	SY3000
5	SY5000
7	SY7000

❷ Type of actuation

1	2-position	Single
2		Double
3	3-position	Closed center
4		Exhaust center
5		Pressure center
A*1	4-position dual 3-port	N.C./N.C.
B*1		N.O./N.O.
C*1		N.C./N.O.

*1 Only the rubber seal type is available for the 4-position dual 3-port valve.

❸ Seal type

0	Rubber seal
1	Metal seal

❹ Pilot type

Nil	Internal pilot
R	External pilot

❺ Back pressure check valve (Built-in valve type)

Nil	None
H	Built-in

* Only the rubber seal type is available. A manifold installed type is available if a back pressure check valve with a metal seal is required. Refer to page 212 for ordering examples. However, it is not recommended to use the built-in valve type and the manifold installed type at the same time because it will reduce the flow.
* The built-in valve type back pressure check valve is not available for the 3-position type or the SY7000.

❻ Pilot valve option

Nil	Standard (0.7 MPa)
B	Quick response type (0.7 MPa)
K*1	High pressure type (1.0 MPa)

*1 Only the metal seal type is available for the high pressure type.

❼ Coil type

Nil	Standard
T	With power saving circuit (Continuous duty type)

* Be sure to select the power saving circuit type if the valve is to be continuously energized for long periods of time.
* Be careful of the energizing time when the power saving circuit is selected. Refer to page 292 for details.

❽ Rated voltage

5	24 VDC

❾ Light/surge voltage suppressor and common specification

Symbol	With light	Surge voltage suppressor	Common specification
R	—	●	Non-polar
U	●		
S	—		Positive common
Z	●		
NS	—		Negative common
NZ	●		

* Select “R,” “U,” “S,” or “Z” for the valve when the SI unit output polarity is Nil (positive common). Select “R,” “U,” “NS,” or “NZ” for the valve when the SI unit output polarity is N (negative common).
* Only “Z” and “NZ” types are available with a power saving circuit.

❿ Manual override

Nil: Non-locking push type	**D**: Push-turn locking slotted type
E: Push-turn locking lever type	**F**: Slide locking type

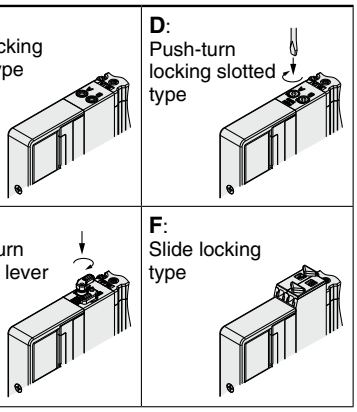

* Refer to page 34 for the safety slide locking manual override.

⓫ Type of mounting screw

Nil	Round head combination screw
B	Hexagon socket head cap screw
K	Round head combination screw (Drop prevention type)
H	Hexagon socket head cap screw (Drop prevention type)

* For “K” and “H,” the valve body cover has a drop prevention construction to stop the mounting screws from falling out when the valve is removed for maintenance, etc.
* **When ordering a valve individually, the base gasket is not included.**
  Since the base gasket is attached to the manifold, please order the base gasket separately if it is needed for maintenance. Refer to page 198 for base gasket and mounting screw part numbers.
* “B” and “H” cannot be selected for the individual SUP/EXH spacer assembly, interface regulator, or double check spacer assembly with residual pressure release valve.

⚠ Protective class class Ⅲ (Mark: Ⅲ)

Type 10
Side Ported

Type 11
Bottom Ported

Plug-in Connector Connecting Base

EX260 Safety Communication Protocol (PROFIsafe)

SY3000/5000/7000 Series

Using the safety communication protocol

Refer to the EX260 **Web Catalog** for details on units that support the safety communication protocol.
When using a manifold valve within an ISO 13849-compliant safety system, the device needs to be considered from both the pneumatic circuit and the electric side.
Devices (including valves) need to be selected based on whether their functions are in line with the safety level of the equipment as a whole.
The use of valves that have been validated as being compliant with ISO 13849-2 may be required.
For details on valves that have been validated, please contact SMC.
In addition, refer to "Safety Instructions" for precautions on model selection.

Refer to page 133 for details on manifolds that support Fieldbus and Industrial Ethernet.

How to Order Manifolds

Refer to pages 160 (SY5000) and 161 (SY7000) for the dimensions of Type 11/Bottom-ported type.

SS5Y [3] – [10] S [FPN] – [05] [U] [ ] – [C6] [ ]
❶ ❷ ❸ ❹ ❺ ❻ ❼ ❽

❶ Series

3	SY3000
5	SY5000
7	SY7000

❷ Type

10	Side ported
11	Bottom ported*1

*1 The SY5000 manifold base is used for the bottom-ported SY3000. When ordering, refer to the "Plug-in Mixed Type Manifold" (from page 165).

❸ SI unit specifications

(Output polarity, Protocol, Number of outputs, Communication connector)

Symbol (Output polarity)		Protocol	Number of outputs	Communication connector
Positive common (NPN)	Negative common (PNP)			
0*1		Without SI unit		
—*3	**FPN**	PROFIsafe	32*4	M12

*1 Without SI unit, the output polarity is decided by the SI unit used. Ensure a match with the common specification of the valves to be used.
*2 DIN rail cannot be mounted without SI unit.
*3 Positive common (NPN) type is not applicable.
*4 Only the 32 outputs type is available.

❹ Valve stations

Symbol	Stations	Note
02	2 stations	Double wiring*1
⋮	⋮	
16	16 stations	
02	2 stations	Specified layout*2 (Up to 32 solenoids available)
⋮	⋮	
24	24 stations	

*1 Double wiring: 2-position single, double, 3-position, and 4-position valves can be used on all manifold stations. Use of a 2-position single solenoid will result in an unused control signal. If this is not desired, order with a specified layout
*2 Specified layout: Indicate the wiring specifications on the manifold specification sheet. (Note that 2-position double, 3-position, and 4-position valves cannot be used where single wiring has been specified.)
* This also includes the number of the blanking plate assembly.

❺ P, E port entry

U	U side (2 to 10 stations)
D	D side (2 to 10 stations)
B	Both sides (2 to 24 stations)

❻ SUP/EXH block assembly

Nil	Internal pilot
S	Internal pilot, Built-in silencer
R	External pilot

* 3/5(E) port is plugged for the built-in silencer type.
* When the built-in silencer type is used, keep the exhaust port from coming into direct contact with water or other liquids.

Refer to the page on the right for ❼.

❽ Mounting and Option

Symbol	Mounting	Option	
		Name plate	Station number
Nil	Direct mounting	—	—
AA		●	●
BA		●	—
D□	DIN rail mounting	—	—
A□		●	●
B□		●	—

* Enter the number of stations inside □ when it is larger than the number of valve stations. (Refer to "DIN Rail Option" below.)
* Only direct mounting is available for the type 11 bottom-ported type.
* Refer to page 295 for the fixation of DIN rail mounting type manifold.

DIN Rail Option

Nil	Standard length	
0	Without DIN rail (with bracket)	
3	For 3 stations	Specify a longer rail than the total length of specified stations.
⋮	⋮	
24	For 24 stations	

* If the DIN rail must be mounted without an SI unit, select D0. Then, refer to L3 of the dimensions for the DIN rail length and order separately. (Refer to page 203 for the DIN rail part number.)

For details on the EX260 Integrated Type (For Output) Serial Transmission System, refer to the **Web Catalog** and the Operation Manual. For the part numbers of the SI units to be mounted, refer to page 194. Please download the Operation Manual via the SMC website, https://www.smcworld.com

SMC

❼ A, B port size (Metric/One-touch fitting)

Symbol	A, B port		Type 10/Side ported			Type 11/Bottom ported	
			SY3000	SY5000	SY7000	SY5000	SY7000
C2	Straight	ø2	●	—	—	—	—
C3		ø3.2	●	—	—	—	—
C4		ø4	●	●	—	●	—
C6		ø6	●	●	●	●	●
C8		ø8	—	●	●	●	●
C10		ø10	—	—	●	—	●
C12		ø12	—	—	●	—	●
CM*1		Straight port, mixed sizes	●	●	●	●	●
L4	Elbow*2 Upward	ø4	●	●	—	—	—
L6		ø6	●	●	●	—	—
L8		ø8	—	●	●	—	—
L10		ø10	—	—	●	—	—
L12		ø12	—	—	●	—	—
B4	Elbow*2 Downward	ø4	●	●	—	—	—
B6		ø6	●	●	●	—	—
B8		ø8	—	●	●	—	—
B10		ø10	—	—	●	—	—
B12		ø12	—	—	●	—	—
LM*1		Elbow port, mixed sizes (Including upward and downward piping)	●	●	●	—	—
P, E port size (One-touch fittings)			ø8	ø10	ø12	ø10	ø12

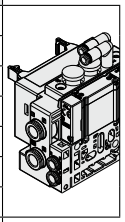
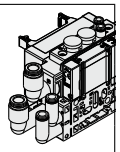
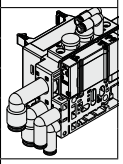

A, B port size (Inch/One-touch fitting)

Symbol	A, B port		Type 10/Side ported			Type 11/Bottom ported	
			SY3000	SY5000	SY7000	SY5000	SY7000
N1	Straight	ø1/8"	●	—	—	—	—
N3		ø5/32"	●	●	—	●	—
N7		ø1/4"	●	●	●	●	●
N9		ø5/16"	—	●	●	●	●
N11		ø3/8"	—	—	●	—	●
CM*1		Straight port, mixed sizes	●	●	●	●	●
LN3	Elbow*2 Upward	ø5/32"	●	—	—	—	—
LN7		ø1/4"	●	●	—	—	—
LN9		ø5/16"	—	●	—	—	—
LN11		ø3/8"	—	—	●	—	—
BN3	Elbow*2 Downward	ø5/32"	●	—	—	—	—
BN7		ø1/4"	●	●	—	—	—
BN9		ø5/16"	—	●	—	—	—
BN11		ø3/8"	—	—	●	—	—
LM*1		Elbow port, mixed sizes (Including upward and downward piping)	●	●	●	—	—
P, E port size (One-touch fittings)			ø5/16"	ø3/8"	ø1/2"	ø3/8"	ø1/2"

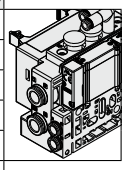
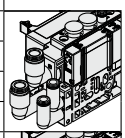
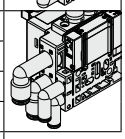

*1 Indicate the sizes on the manifold specification sheet in the case of "CM" or "LM."
The direction of P, E port fittings is the same as for the A, B port. If selecting "LM," indicate it on the manifold specification sheet for the P, E port fitting direction.

*2 To avoid interference with the body or piping, select a downward elbow port when mounting the optional spacer assembly (pages 204 to 206).

Protective class
class Ⅲ (Mark: ⏚)

[Validated product examples]

Please contact SMC for further details as supported variations are continually being added.

∗ 2-position double of rubber seal and manual override with locking function (D, E, F type) are excluded, because they don't comply with safety standard.

How to Order Valves (With mounting screw)

Refer to page 15 for valve specifications.

SY 3 1 0 0 □ □ □ □ – 5 □ □ 1 – □

❶ ❷ ❸ ❹ ❺ ❻ ❼ ❽ ❾ ❿ ⓫

❸ Base mounted

❶ Series

3	SY3000
5	SY5000
7	SY7000

❷ Type of actuation

1	2-position	Single
2		Double∗2
3	3-position	Closed center
4		Exhaust center
5		Pressure center
A∗1	4-position dual 3-port	N.C./N.C.
B∗1		N.O./N.O.
C∗1		N.C./N.O.

∗1 Only the rubber seal type is available for the 4-position dual 3-port valve.
∗2 Except the rubber seal

❸ Seal type

0	Rubber seal
1	Metal seal

❹ Pilot type

Nil	Internal pilot
R	External pilot

❺ Back pressure check valve (Built-in valve type)

Nil	None
H	Built-in

∗ Only the rubber seal type is available. A manifold installed type is available if a back pressure check valve with a metal seal is required. Refer to page 212 for ordering examples. However, it is not recommended to use the built-in valve type and the manifold installed type at the same time because it will reduce the flow.
∗ The back pressure check valve is not available for the 3-position type or the SY7000.

❻ Pilot valve option

Nil	Standard (0.7 MPa)
B	Quick response type (0.7 MPa)
K∗1	High pressure type (1.0 MPa)

∗1 Only the metal seal type is available for the high pressure type.

❼ Coil type

Nil	Standard
T	With power saving circuit (Continuous duty type)

∗ Be sure to select the power saving circuit type if the valve is to be continuously energized for long periods of time.
∗ Be careful of the energizing time when the power saving circuit is selected. Refer to page 292 for details.

❽ Rated voltage

5	24 VDC

❾ Light/surge voltage suppressor and common specification

Symbol	With light	Surge voltage suppressor	Common specification
Nil	—	—	Non-polar
R	—	●	
U	●		
NS	—		Negative common
NZ	●		

∗ Only "NZ" type is available with a power saving circuit.

❿ Manual override

Nil:
Non-locking push type

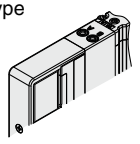

⓫ Type of mounting screw

Nil	Round head combination screw
B	Hexagon socket head cap screw
K	Round head combination screw (Drop prevention type)
H	Hexagon socket head cap screw (Drop prevention type)

∗ For "K" and "H," the valve body cover has a drop prevention construction to stop the mounting screws from falling out when the valve is removed for maintenance, etc.
∗ **When ordering a valve individually, the base gasket is not included.**
Since the base gasket is attached to the manifold, please order the base gasket separately if it is needed for maintenance. Refer to page 198 for base gasket and mounting screw part numbers.
∗ "B" and "H" cannot be selected for the individual SUP/EXH spacer assembly, interface regulator, or double check spacer assembly with residual pressure release valve.

Plug-in Connector Connecting Base | Type 10/Side Ported | EX260

Dimensions: SY3000 Series

SS5Y3-10S□□-Stations U/D/B - C2, C3, N1, C4, N3, C6, N7 (D)

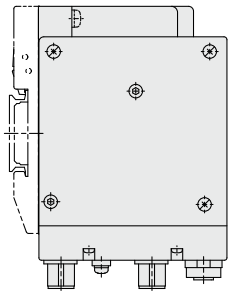

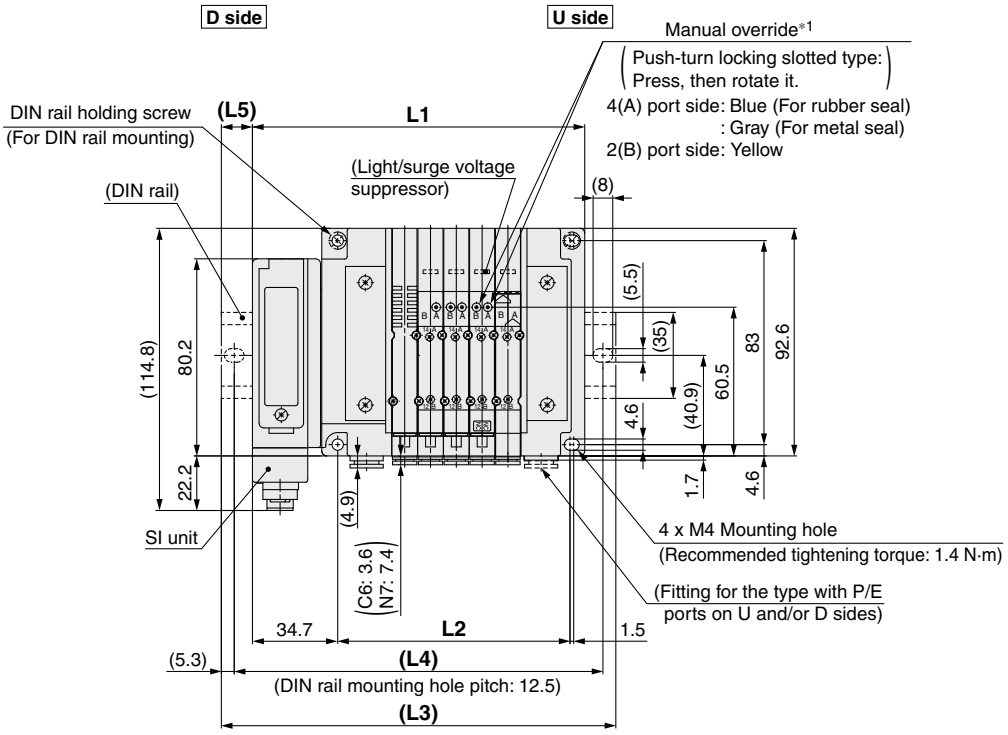

[Communication connector D-sub]

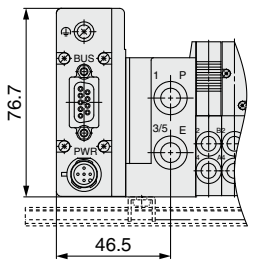

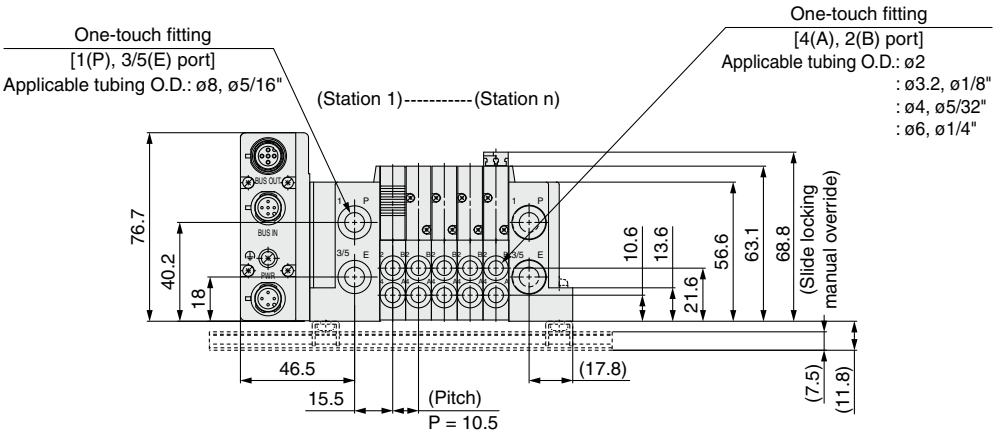

*1 Refer to page 157 for dimensions of the external pilot, silencer, elbow fittings, and slide locking manual override.
* These figures show the "SS5Y3-10SQA-05D-C6."
* Refer to page 162 for dimensions of A or B port top-ported type.

n: Stations	2	3	4	5	6	7	8	9	10	11	12	13	14	15	16	17
L1	103.7	114.2	124.7	135.2	145.7	156.2	166.7	177.2	187.7	198.2	208.7	219.2	229.7	240.2	250.7	261.2
L2	63	73.5	84	94.5	105	115.5	126	136.5	147	157.5	168	178.5	189	199.5	210	220.5
L3	135.5	148	148	160.5	173	185.5	198	210.5	223	223	235.5	248	260.5	273	285.5	285.5
L4	125	137.5	137.5	150	162.5	175	187.5	200	212.5	212.5	225	237.5	250	262.5	275	275
L5	16	17	11.5	12.5	13.5	14.5	15.5	16.5	17.5	12.5	13.5	14.5	15.5	16.5	17.5	12

n: Stations	18	19	20	21	22	23	24
L1	271.7	282.2	292.7	303.2	313.7	324.2	334.7
L2	231	241.5	252	262.5	273	283.5	294
L3	298	310.5	323	335.5	348	348	360.5
L4	287.5	300	312.5	325	337.5	337.5	350
L5	13	14	15	16	17	12	13

Dimensions: SY5000 Series

SS5Y5-10S□□-Stations U C4, N3 / D C6, N7 / B C8, N9 (D)

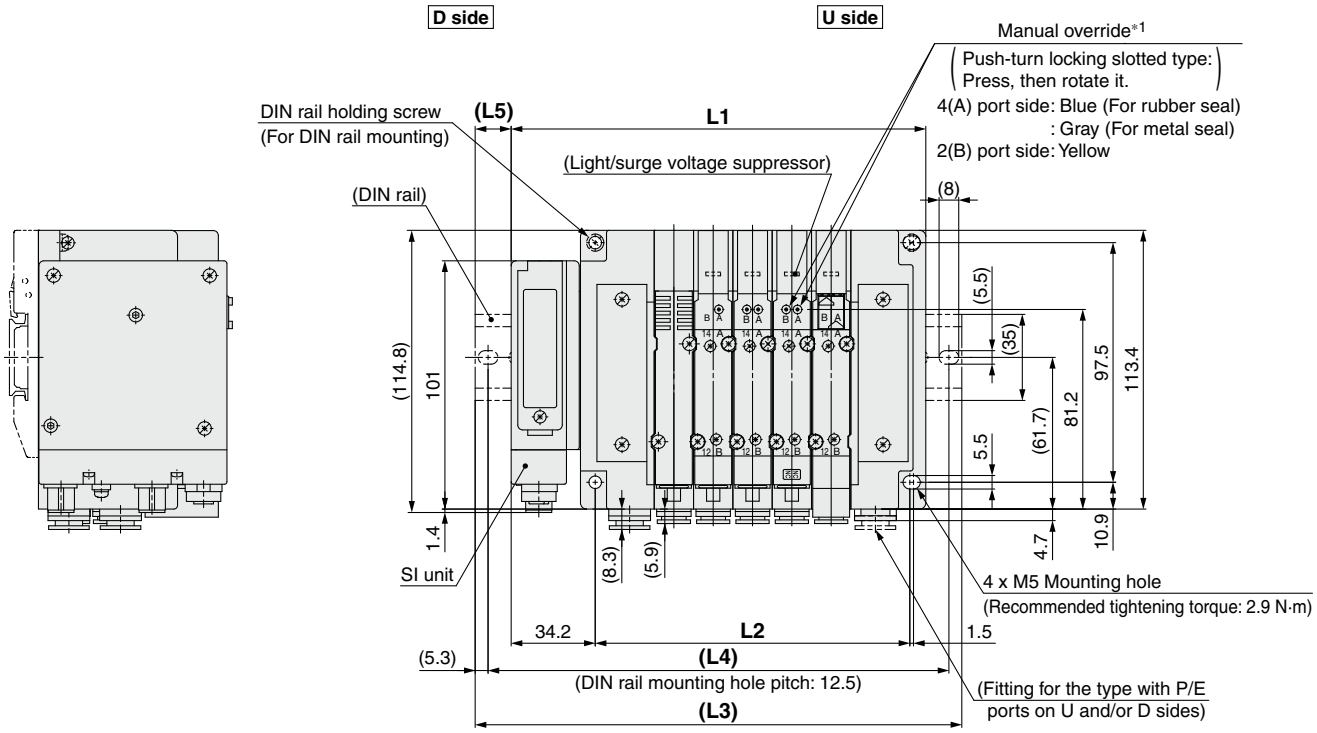

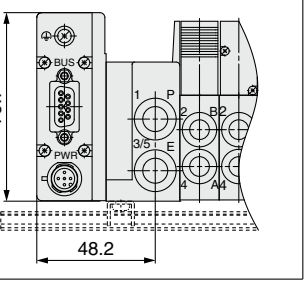

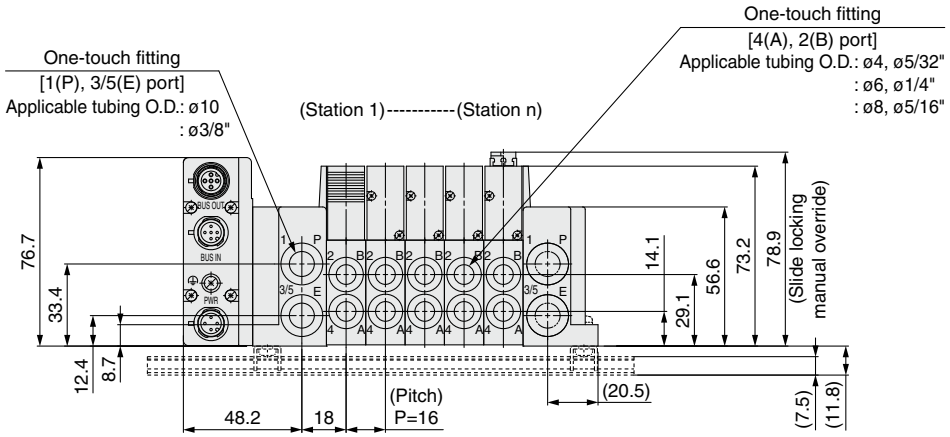

*1 Refer to page 158 for dimensions of the external pilot, silencer, elbow fittings, and slide locking manual override.
* These figures show the "SS5Y5-10SQA-05D-C8."
* Refer to page 163 for dimensions of A or B port top-ported type.

n: Stations	2	3	4	5	6	7	8	9	10	11	12	13	14	15	16	17
L1	120.7	136.7	152.7	168.7	184.7	200.7	216.7	232.7	248.7	264.7	280.7	296.7	312.7	328.7	344.7	360.7
L2	80	96	112	128	144	160	176	192	208	224	240	256	272	288	304	320
L3	148	160.5	185.5	198	210.5	235.5	248	260.5	273	298	310.5	323	348	360.5	373	385.5
L4	137.5	150	175	187.5	200	225	237.5	250	262.5	287.5	300	312.5	337.5	350	362.5	375
L5	13.5	12	16.5	14.5	13	17.5	15.5	14	12	16.5	15	13	17.5	16	14	12.5

n: Stations	18	19	20	21	22	23	24
L1	376.7	392.7	408.7	424.7	440.7	456.7	472.7
L2	336	352	368	384	400	416	432
L3	410.5	423	435.5	448	473	485.5	498
L4	400	412.5	425	437.5	462.5	475	487.5
L5	17	15	13.5	11.5	16	14.5	12.5

Plug-in Connector Connecting Base | Type 10/Side Ported | EX260

Dimensions: SY7000 Series

SS5Y7-10S□□-Stations U/D/B - C6, N7 / C8, N9 / C10, N11 / C12 (D)

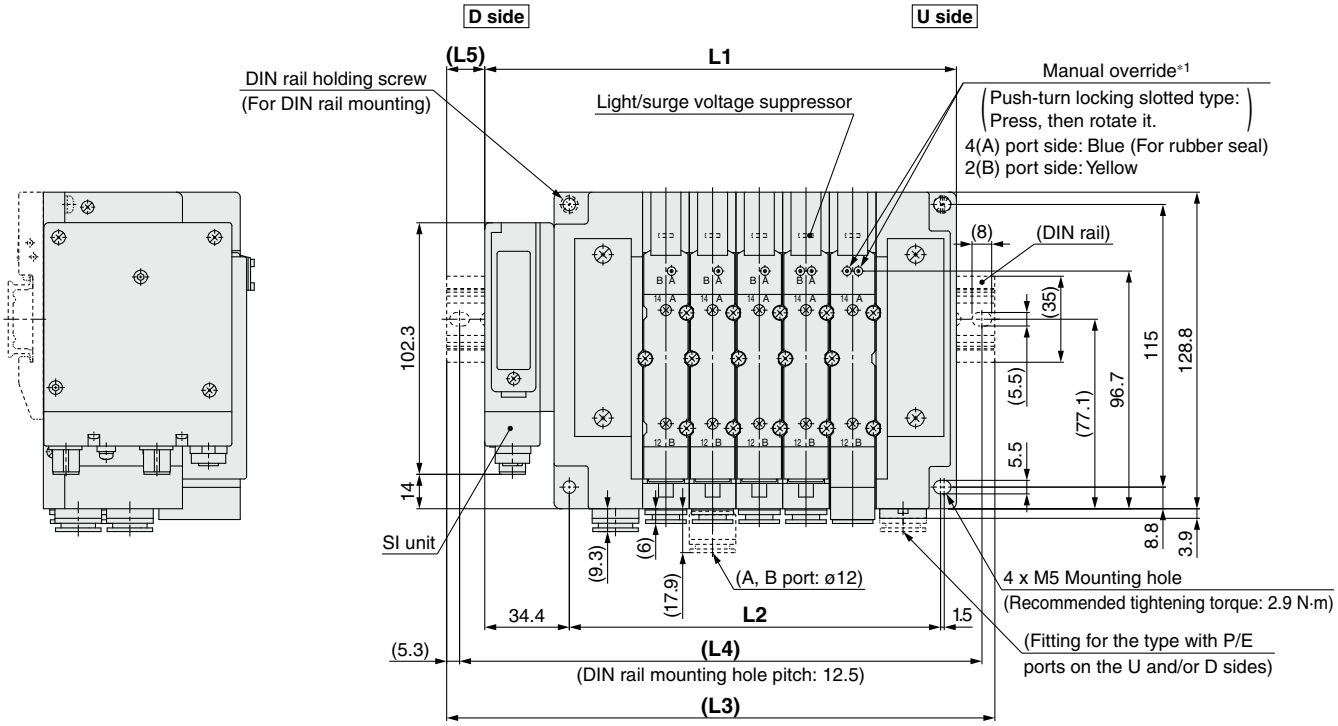

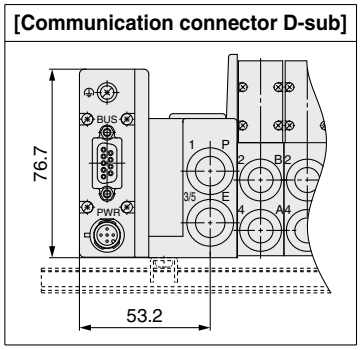

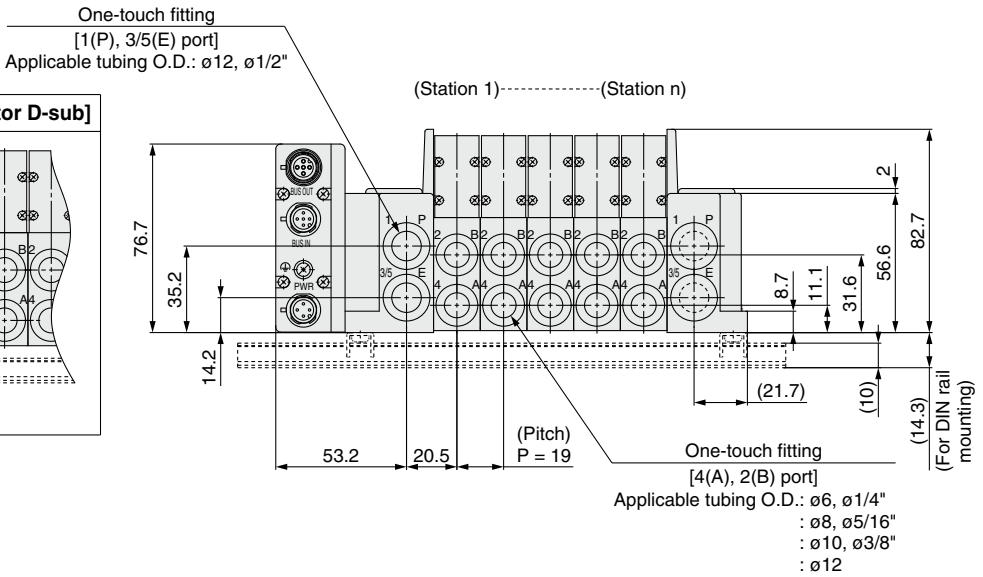

*1 Refer to page 159 for dimensions of the external pilot, silencer, elbow fittings, and slide locking manual override.
* These figures show the "SS5Y7-10SQA-05D-C10."
* Refer to page 164 for dimensions of A or B port top-ported type.

n: Stations	2	3	4	5	6	7	8	9	10	11	12	13	14	15	16	17	18	19	20	21	22	23	24
L1	134.9	153.9	172.9	191.9	210.9	229.9	248.9	267.9	286.9	305.9	324.9	343.9	362.9	381.9	400.9	419.9	438.9	457.9	476.9	495.9	514.9	533.9	552.9
L2	94	113	132	151	170	189	208	227	246	265	284	303	322	341	360	379	398	417	436	455	474	493	512
L3	160.5	185.5	198	223	235.5	260.5	273	298	310.5	335.5	348	373	398	410.5	435.5	448	473	485.5	510.5	523	548	560.5	585.5
L4	150	175	187.5	212.5	225	250	262.5	287.5	300	325	337.5	362.5	387.5	400	425	437.5	462.5	475	500	512.5	537.5	550	575
L5	13	16	12.5	15.5	12.5	15.5	12	15	12	15	11.5	14.5	17.5	14.5	17.5	14	17	14	17	13.5	16.5	13.5	16.5

Plug-in Connector Connecting Base

EX260

Type 12
Top Ported

SY3000/5000/7000 Series

How to Order Manifolds

Refer to pages 162 to 164 for the dimensions of Type 12/Top-ported type.

SS5Y 3 – 12S NAN – 05 U □ – □ □
❶ ❷ ❸ ❹ ❺ ❻ ❼

❶ Series

3	SY3000
5	SY5000
7	SY7000

❷ SI unit specifications

(Output polarity, Protocol, Number of outputs, Communication connector)

Symbol (Output polarity)		Protocol	Number of outputs	Communication connector
Positive common (NPN)	Negative common (PNP)			
0∗1		Without SI unit		
QA	**QAN**	DeviceNet®	32	M12
QB	**QBN**		16	
NA	**NAN**	PROFIBUS DP	32	M12
NB	**NBN**		16	
NC	**NCN**		32	∗4 D-sub
ND	**NDN**		16	
VA	**VAN**	CC-Link	32	M12
VB	**VBN**		16	
DA	**DAN**	EtherCAT	32	M12
DB	**DBN**		16	
FA	**FAN**	PROFINET	32	M12
FB	**FBN**		16	
EA	**EAN**	EtherNet/IP™	32	M12
EB	**EBN**		16	
—∗3	**GAN**	Ethernet POWERLINK	32	M12
—∗3	**GBN**		16	
—∗3	**KAN**	IO-Link	32∗5	M12

∗1 Without SI unit, the output polarity is decided by the SI unit used.
Ensure a match with the common specification of the valves to be used.
∗2 DIN rail cannot be mounted without SI unit.
∗3 Positive common (NPN) type is not applicable.
∗4 IP40 for the D-sub applicable communication connector specification
∗5 Only the 32 outputs type is available.

❸ Valve stations

In the case of the 32-output SI unit

Symbol	Stations	Note
02	2 stations	Double wiring∗1
⋮	⋮	
16	16 stations	
02	2 stations	Specified layout∗2 (Up to 32 solenoids available)
⋮	⋮	
24	24 stations	

In the case of the 16-output SI unit

Symbol	Stations	Note
02	2 stations	Double wiring∗1
⋮	⋮	
08	8 stations	
02	2 stations	Specified layout∗2 (Up to 16 solenoids available)
⋮	⋮	
16	16 stations	

∗1 Double wiring: 2-position single, double, 3-position, and 4-position valves can be used on all manifold stations.
Use of a 2-position single solenoid will result in an unused control signal. If this is not desired, order with a specified layout.
∗2 Specified layout: Indicate the wiring specifications on the manifold specification sheet.
(Note that 2-position double, 3-position, and 4-position valves cannot be used where single wiring has been specified.)
∗ This also includes the number of the blanking plate assembly.
∗ For the model without the SI unit (S0), note the maximum number of solenoids of the SI unit that will be mounted. If the layout is specified, indicate it on the manifold specification sheet.

For details on the EX260 Integrated Type (For Output) Serial Transmission System, refer to the **Web Catalog** and the Operation Manual. For the part numbers of the SI units to be mounted, refer to page 194. Please download the Operation Manual via the SMC website, https://www.smcworld.com

❹ P, E port entry

U∗1	U side (2 to 10 stations)
D∗1	D side (2 to 10 stations)
B	Both sides (2 to 24 stations)

∗1 ❺ For type "S", SUP/EXH block assembly with a built-in silencer, choose U or D for P, E port entry.

❺ SUP/EXH block assembly

Nil	Internal pilot
S	Internal pilot, Built-in silencer
R	External pilot

∗ The P and E ports are only available on the U and D sides for the built-in silencer type. 3/5(E) port is plugged. The silencer exhaust port is located on the opposite side of the P and E port entry. (Example: When the P and E port entry is on the D side, the silencer exhaust port is on the U side.)
∗ When the built-in silencer type is used, keep the exhaust port from coming into direct contact with water or other liquids.

❻ P, E port size (One-touch fittings)

Symbol	SY3000	SY5000	SY7000
Nil	ø8	ø10	ø12
N	ø5/16"	ø3/8"	ø1/2"

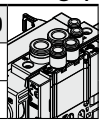

∗ For N, sizes are in inches.

❼ Mounting

Nil	Direct mounting	
D	DIN rail mounting (With DIN rail)	
D0	DIN rail mounting (Without DIN rail)	
D3	For 3 stations	Specify a length longer than that of the standard rail.
⋮	⋮	
D24	For 24 stations	

∗ If the DIN rail must be mounted without an SI unit, select D0. Then, refer to L3 of the dimensions for the DIN rail length and order separately. (Refer to page 203 for the DIN rail part number.)
∗ Refer to page 295 for the fixation of DIN rail mounting type manifold.

How to Order Manifold Assembly

Example (SS5Y3-12SNAN-□)

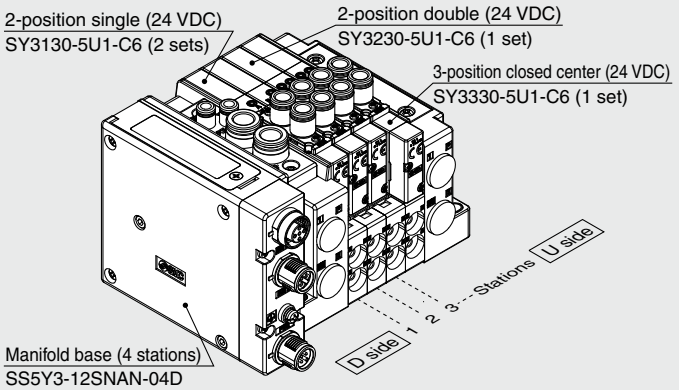

SS5Y3-12SNAN-04D ····· 1 set (Type 12 4-station manifold base part no.)
∗SY3130-5U1-C6 ····· 2 sets (2-position single part no.)
∗SY3230-5U1-C6 ····· 1 set (2-position double part no.)
∗SY3330-5U1-C6 ····· 1 set (3-position closed center part no.)
The asterisk denotes the symbol for the assembly. Prefix it to the part numbers of the valve, etc.

- For the valve arrangement, the valve closest to the D side is considered the 1st station.
- Under the manifold part number, state the valves to be mounted in order starting with the 1st station as shown in the figure above. If the arrangement becomes too complicated, specify the details on a manifold specification sheet.

How to Order Valves (With mounting screw)

Refer to page 15 for valve specifications.

SY 3 1 3 0 □ □ □ □ – 5 □ □ 1 – C6 □ – □

❶ ❷ ❸ ❹ ❺ ❻ ❼ ❽ ❾ ❿ ⓫ ⓬ ⓭

❸: Top ported

❶ Series

3	SY3000
5	SY5000
7	SY7000

❷ Type of actuation

1	2-position	Single
2		Double
3	3-position	Closed center
4		Exhaust center
5		Pressure center
A*1	4-position dual 3-port	N.C./N.C.
B*1		N.O./N.O.
C*1		N.C./N.O.

*1 Only the rubber seal type is available for the 4-position dual 3-port valve.

❸ Seal type

0	Rubber seal
1	Metal seal

❹ Pilot type

Nil	Internal pilot
R	External pilot

❺ Back pressure check valve (Built-in valve type)

Nil	None
H	Built-in

* Only the rubber seal type is available. A manifold installed type is available if a back pressure check valve with a metal seal is required. Refer to page 212 for ordering examples. However, it is not recommended to use the built-in valve type and the manifold installed type at the same time because it will reduce the flow.
* The built-in valve type back pressure check valve is not available for the 3-position type or the SY7000.

❻ Pilot valve option

Nil	Standard (0.7 MPa)
B	Quick response type (0.7 MPa)
K*1	High pressure type (1.0 MPa)

*1 Only the metal seal type is available for the high pressure type.

❼ Coil type

Nil	Standard
T	With power saving circuit (Continuous duty type)

* Be sure to select the power saving circuit type if the valve is to be continuously energized for long periods of time.
* Be careful of the energizing time when the power saving circuit is selected. Refer to page 292 for details.

❽ Rated voltage

5	24 VDC

❾ Light/surge voltage suppressor and common specification

Symbol	With light	Surge voltage suppressor	Common specification
R	—	●	Non-polar
U	●		
S	—		Positive common
Z	●		
NS	—		Negative common
NZ	●		

* Select "R," "U," "S," or "Z" for the valve when the SI unit output polarity is Nil (positive common). Select "R," "U," "NS," or "NZ" for the valve when the SI unit output polarity is N (negative common).
* Only "Z" and "NZ" types are available with a power saving circuit.

❿ Manual override

Nil: Non-locking push type

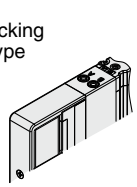

D: Push-turn locking slotted type

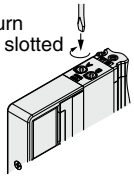

E: Push-turn locking lever type

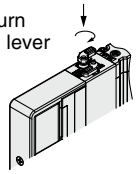

F: Slide locking type

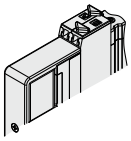

* Refer to page 34 for the safety slide locking manual override.

⓫ A, B port size

Thread piping

Symbol	Port size	Applicable series
M5	M5 x 0.8	SY3000
01	1/8	SY5000
02	1/4	SY7000

One-touch fitting (Metric)

Symbol	A, B port	SY3000	SY5000	SY7000
C2	ø2	●	—	—
C3	ø3.2	●	—	—
C4	ø4	●	●	—
C6	ø6	●	●	●
C8	ø8	—	●	●
C10	ø10	—	—	●
C12	ø12	—	—	●

One-touch fitting (Inch)

Symbol	A, B port	SY3000	SY5000	SY7000
N1	ø1/8"	●	—	—
N3	ø5/32"	●	●	—
N7	ø1/4"	●	●	●
N9	ø5/16"	—	●	●
N11	ø3/8"	—	—	●

⓬ Thread type

Nil	Rc
F	G
N	NPT
T	NPTF

* Only Nil is available for M5.

⓭ Type of mounting screw

Nil	Round head combination screw
B	Hexagon socket head cap screw
K	Round head combination screw (Drop prevention type)
H	Hexagon socket head cap screw (Drop prevention type)

* For "K" and "H," the valve body cover has a drop prevention construction to stop the mounting screws from falling out when the valve is removed for maintenance, etc.
* **When ordering a valve individually, the base gasket is not included.**
  Since the base gasket is attached to the manifold, please order the base gasket separately if it is needed for maintenance. Refer to page 198 for base gasket and mounting screw part numbers.
* "B" and "H" cannot be selected for the individual SUP/EXH spacer assembly or interface regulator.

Protective class class Ⅲ (Mark: ⧾)

Type 10
Side Ported

Type 11
Bottom Ported

Plug-in Connector Connecting Base

EX126

SY3000/5000/7000 Series

How to Order Manifolds

Refer to pages 160 (SY5000) and 161 (SY7000) for the dimensions of Type 11/Bottom-ported type.

SS5Y 3 – 10 S4 V – 05 U □ – C6 □

❶ ❷ ❸ ❹ ❺ ❻ ❼ ❽

❶ Series

3	SY3000
5	SY5000
7	SY7000

❷ Type

10	Side ported
11	Bottom ported*1

*1 The SY5000 manifold base is used for the bottom-ported SY3000. When ordering, refer to the "Plug-in Mixed Mounting Type Manifold" (from page 165).

❸ SI unit

0	Without SI unit
V	CC-Link (Positive common NPN)

* Only a terminal block plate is mounted for the valve without SI unit.

❹ Valve stations

Symbol	Stations	Note
02	2 stations	Double wiring*1
⋮	⋮	
08	8 stations	
02	2 stations	Specified layout*2 (Up to 16 solenoids available)
⋮	⋮	
16	16 stations	

*1 Double wiring: 2-position single, double, 3-position, and 4-position valves can be used on all manifold stations.
Use of a 2-position single solenoid will result in an unused control signal. If this is not desired, order with a specified layout.

*2 Specified layout: Indicate the wiring specifications with the manifold specification sheet. (Note that 2-position double, 3-position, and 4-position valves cannot be used where single wiring has been specified.)

* This also includes the number of the blanking plate assembly.

❺ P, E port entry

U	U side (2 to 10 stations)
D	D side (2 to 10 stations)
B	Both sides (2 to 16 stations)

❻ SUP/EXH block assembly

Nil	Internal pilot
S	Internal pilot, Built-in silencer
R	External pilot

* 3/5(E) port is plugged for the built-in silencer type.
* When the built-in silencer type is used, keep the exhaust port from coming into direct contact with water or other liquids.

How to Order Manifold Assembly

Example (SS5Y3-10S4V-□-□)

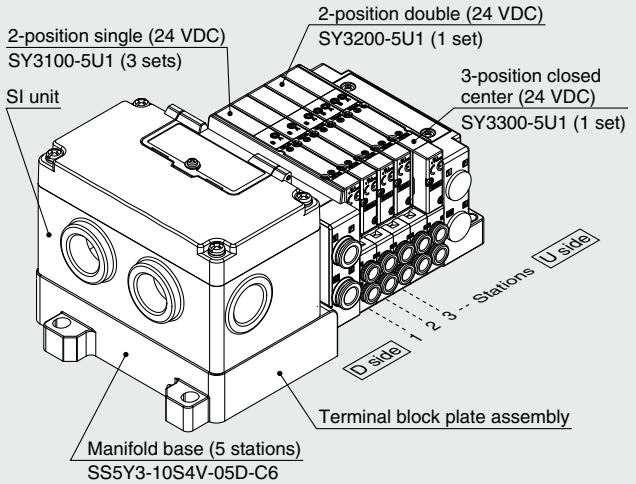

SS5Y3-10S4V-05D-C6 ··· 1 set (Type 10 5-station manifold base part no.)
***SY3100-5U1 ····· 3 sets (2-position single part no.)**
***SY3200-5U1 ····· 1 set (2-position double part no.)**
***SY3300-5U1 ····· 1 set (3-position closed center part no.)**
→ The asterisk denotes the symbol for the assembly. Prefix it to the part numbers of the valve, etc.

- For the valve arrangement, the valve closest to the D side is considered the 1st station.
- Under the manifold part number, state the valves to be mounted in order starting with the 1st station as shown in the figure above. If the arrangement becomes too complicated, specify the details on a manifold specification sheet.

* When mixing top-ported configurations, select from those listed on page 148. In such cases, use caution as there is also output on the A and B ports on the base side.
Specify on the manifold specification sheet if plugs are required for the A and B ports on the base side.

For details on the EX126 Integrated Type (For Output) Serial Transmission System, refer to the **Web Catalog** and the Operation Manual. For the part numbers of the SI units to be mounted, refer to page 195. Please download the Operation Manual via the SMC website, https://www.smcworld.com

SMC

❼ A, B port size (Metric/One-touch fitting)

Symbol	A, B port		Type 10/Side ported			Type 11/Bottom ported	
			SY3000	SY5000	SY7000	SY5000	SY7000
C2	Straight	ø2	●	—	—	—	—
C3		ø3.2	●	—	—	—	—
C4		ø4	●	●	—	●	—
C6		ø6	●	●	●	●	●
C8		ø8	—	●	●	●	●
C10		ø10	—	—	●	—	●
C12		ø12	—	—	●	—	●
CM*1		Straight port, mixed sizes	●	●	●	●	●
L4	Elbow*2 Upward	ø4	●	●	—	—	—
L6		ø6	●	●	●	—	—
L8		ø8	—	●	●	—	—
L10		ø10	—	—	●	—	—
L12		ø12	—	—	●	—	—
B4	Elbow*2 Downward	ø4	●	●	—	—	—
B6		ø6	●	●	●	—	—
B8		ø8	—	●	●	—	—
B10		ø10	—	—	●	—	—
B12		ø12	—	—	●	—	—
LM*1		Elbow port, mixed sizes (Including upward and downward piping)	●	●	●	—	—
P, E port size (One-touch fittings)			ø8	ø10	ø12	ø10	ø12

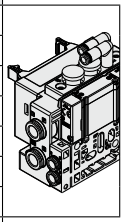
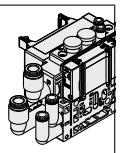
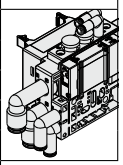

A, B port size (Inch/One-touch fitting)

Symbol	A, B port		Type 10/Side ported			Type 11/Bottom ported	
			SY3000	SY5000	SY7000	SY5000	SY7000
N1	Straight	ø1/8"	●	—	—	—	—
N3		ø5/32"	●	●	—	●	—
N7		ø1/4"	●	●	●	●	●
N9		ø5/16"	—	●	●	●	●
N11		ø3/8"	—	—	●	—	●
CM*1		Straight port, mixed sizes	●	●	●	●	●
LN3	Elbow*2 Upward	ø5/32"	●	—	—	—	—
LN7		ø1/4"	●	●	—	—	—
LN9		ø5/16"	—	●	—	—	—
LN11		ø3/8"	—	—	●	—	—
BN3	Elbow*2 Downward	ø5/32"	●	—	—	—	—
BN7		ø1/4"	●	●	—	—	—
BN9		ø5/16"	—	●	—	—	—
BN11		ø3/8"	—	—	●	—	—
LM*1		Elbow port, mixed sizes (Including upward and downward piping)	●	●	●	—	—
P, E port size (One-touch fittings)			ø5/16"	ø3/8"	ø1/2"	ø3/8"	ø1/2"

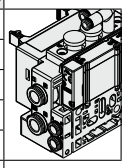
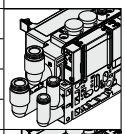
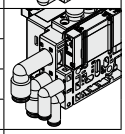

*1 Indicate the sizes on the manifold specification sheet in the case of "CM" or "LM."
The direction of P, E port fittings is the same as for the A, B port. If selecting "LM," indicate it on the manifold specification sheet for the P, E port fitting direction.

*2 To avoid interference with the body or piping, select a downward elbow port when mounting the optional spacer assembly (pages 204 to 206).

❽ Mounting and Option

Symbol	Mounting	Option	
		Name plate	Station number
Nil	Direct mounting	—	—
AA		●	●
BA		●	—
D□	DIN rail mounting	—	—
A□		●	●
B□		●	—

* Enter the number of stations inside □ when it is larger than the number of valve stations. (Refer to "DIN Rail Option" below.)
* Only direct mounting is available for the type 11 bottom-ported type.
* Refer to page 295 for the fixation of DIN rail mounting type manifold.

DIN Rail Option

Nil	Standard length	
0	Without DIN rail (with bracket)	
3	For 3 stations	Specify a longer rail than the total length of specified stations.
⋮	⋮	
16	For 16 stations	

Protective class class Ⅲ (Mark: ⧫)

How to Order Valves (With mounting screw)

Refer to page 15 for valve specifications.

SY 3 1 0 0 □ □ □ □ – 5 □ □ 1 – □

❶ ❷ ❸ ❹ ❺ ❻ ❼ ❽ ❾ ❿ ⓫

❸ Base mounted

❶ Series

3	SY3000
5	SY5000
7	SY7000

❷ Type of actuation

1	2-position	Single
2		Double
3	3-position	Closed center
4		Exhaust center
5		Pressure center
A*1	4-position dual 3-port	N.C./N.C.
B*1		N.O./N.O.
C*1		N.C./N.O.

*1 Only the rubber seal type is available for the 4-position dual 3-port valve.

❸ Seal type

0	Rubber seal
1	Metal seal

❹ Pilot type

Nil	Internal pilot
R	External pilot

❺ Back pressure check valve (Built-in valve type)

Nil	None
H	Built-in

* Only the rubber seal type is available. A manifold installed type is available if a back pressure check valve with a metal seal is required. Refer to page 212 for ordering examples. However, it is not recommended to use the built-in valve type and the manifold installed type at the same time because it will reduce the flow.
* The built-in valve type back pressure check valve is not available for the 3-position type or the SY7000.

❻ Pilot valve option

Nil	Standard (0.7 MPa)
B	Quick response type (0.7 MPa)
K*1	High pressure type (1.0 MPa)

*1 Only the metal seal type is available for the high pressure type.

❼ Coil type

Nil	Standard
T	With power saving circuit (Continuous duty type)

* Be sure to select the power saving circuit type if the valve is to be continuously energized for long periods of time.
* Be careful of the energizing time when the power saving circuit is selected. Refer to page 292 for details.

❽ Rated voltage

5	24 VDC

❾ Light/surge voltage suppressor and common specification

Symbol	With light	Surge voltage suppressor	Common specification
R	—	●	Non-polar
U	●		
S	—		Positive common
Z	●		

* Only "Z" type is available with a power saving circuit.

❿ Manual override

Nil: Non-locking push type	**D**: Push-turn locking slotted type
E: Push-turn locking lever type	**F**: Slide locking type

* Refer to page 34 for the safety slide locking manual override.

⓫ Type of mounting screw

Nil	Round head combination screw
B	Hexagon socket head cap screw
K	Round head combination screw (Drop prevention type)
H	Hexagon socket head cap screw (Drop prevention type)

* For "K" and "H," the valve body cover has a drop prevention construction to stop the mounting screws from falling out when the valve is removed for maintenance, etc.
* **When ordering a valve individually, the base gasket is not included.**
  Since the base gasket is attached to the manifold, please order the base gasket separately if it is needed for maintenance. Refer to page 198 for base gasket and mounting screw part numbers.
* "B" and "H" cannot be selected for the individual SUP/EXH spacer assembly, interface regulator, or double check spacer assembly with residual pressure release valve.

⚠ Protective class class Ⅲ (Mark: Ⅲ)

Plug-in Connector Connecting Base | Type 10/Side Ported | EX126

Dimensions: SY3000 Series

SS5Y3-10S4V- Stations U/D/B - C2/C3, N1/C4, N3/C6, N7 (D)

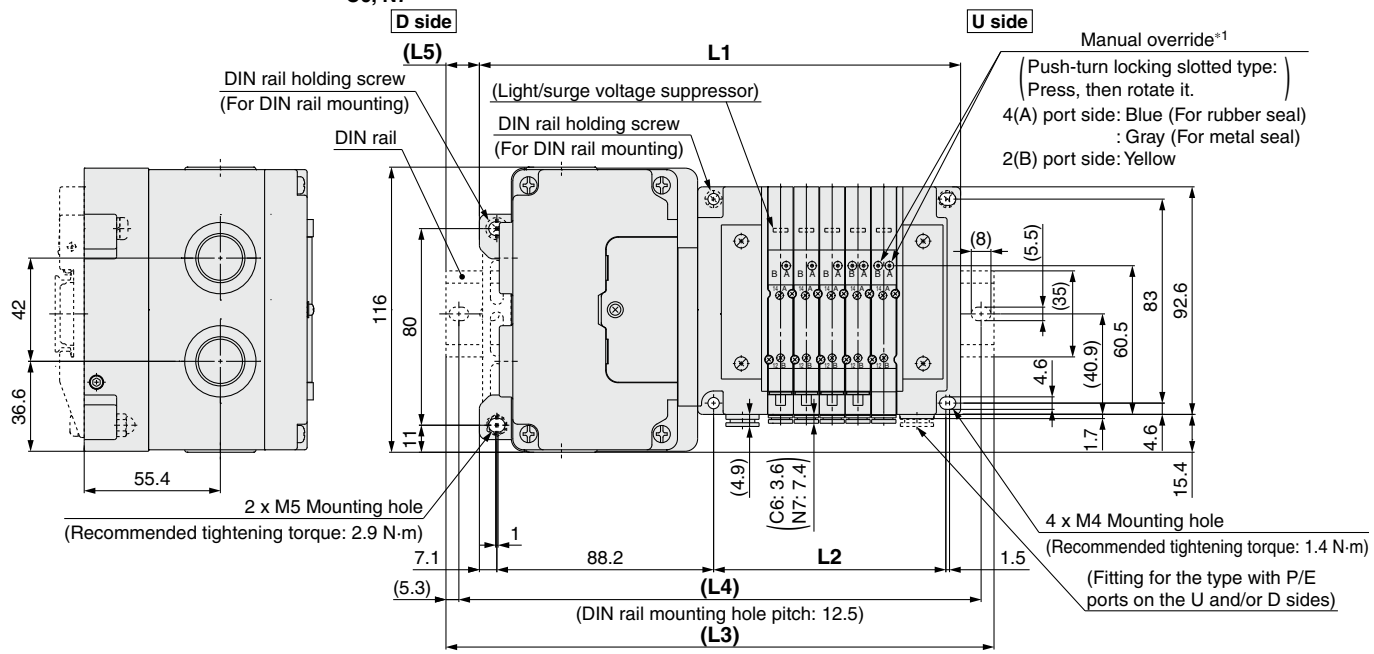

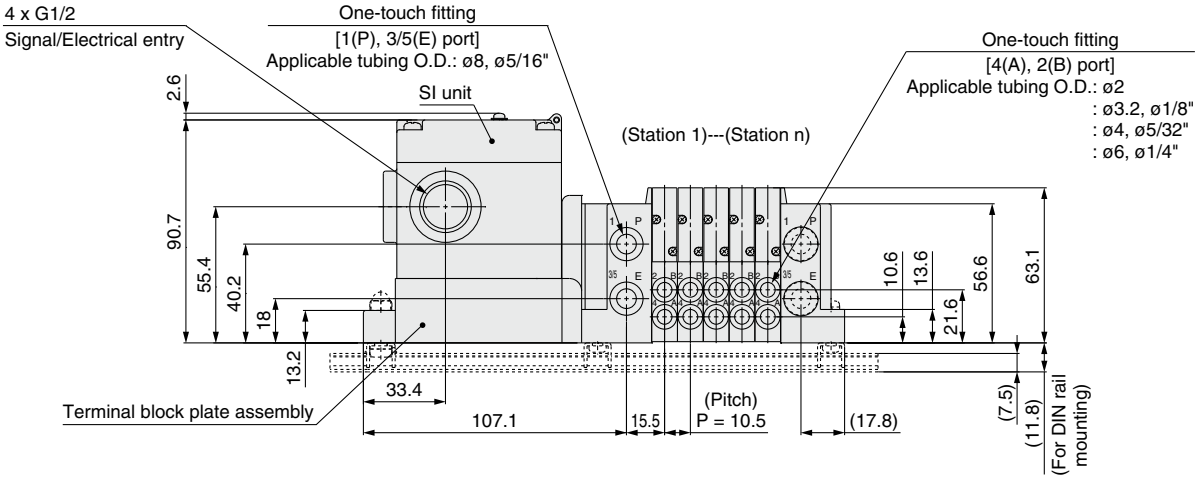

*1 Refer to page 157 for dimensions of the external pilot, silencer, elbow fittings, and slide locking manual override.
* These figures show the "SS5Y3-10S4V-05D-C6."
* Refer to page 162 for dimensions of A or B port top-ported type.

n: Stations	2	3	4	5	6	7	8	9	10	11	12	13	14	15	16
L1	164.3	174.8	185.3	195.8	206.3	216.8	227.3	237.8	248.3	258.8	269.3	279.8	290.3	300.8	311.3
L2	63	73.5	84	94.5	105	115.5	126	136.5	147	157.5	168	178.5	189	199.5	210
L3	198	198	210.5	223	235.5	248	260.5	273	273	285.5	298	310.5	323	335.5	335.5
L4	187.5	187.5	200	212.5	225	237.5	250	262.5	262.5	275	287.5	300	312.5	325	325
L5	17	11.5	12.5	13.5	14.5	15.5	16.5	17.5	12.5	13.5	14.5	15.5	16.5	17.5	12

Plug-in
Connector Connecting Base

Type 10/Side Ported
EX126

Dimensions: SY5000 Series

SS5Y5-10S4V- Stations U C4, N3 / D- C6, N7 / B C8, N9 (D)

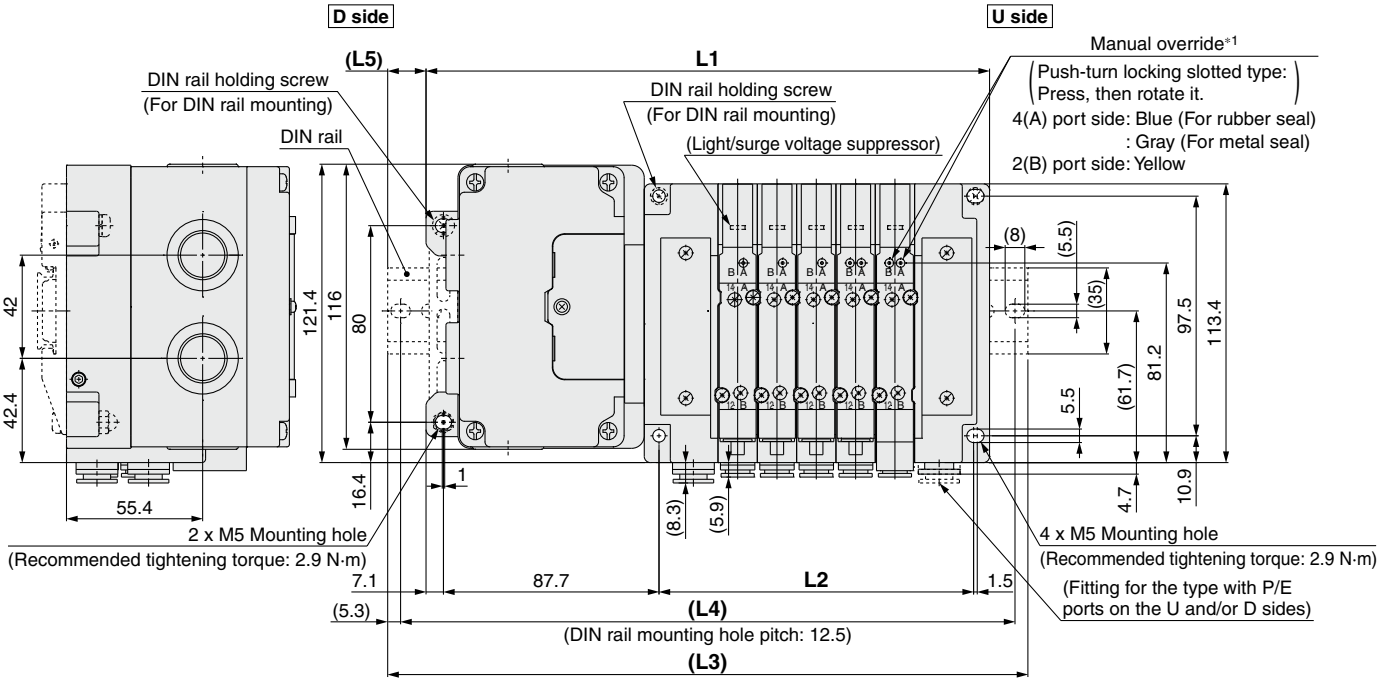

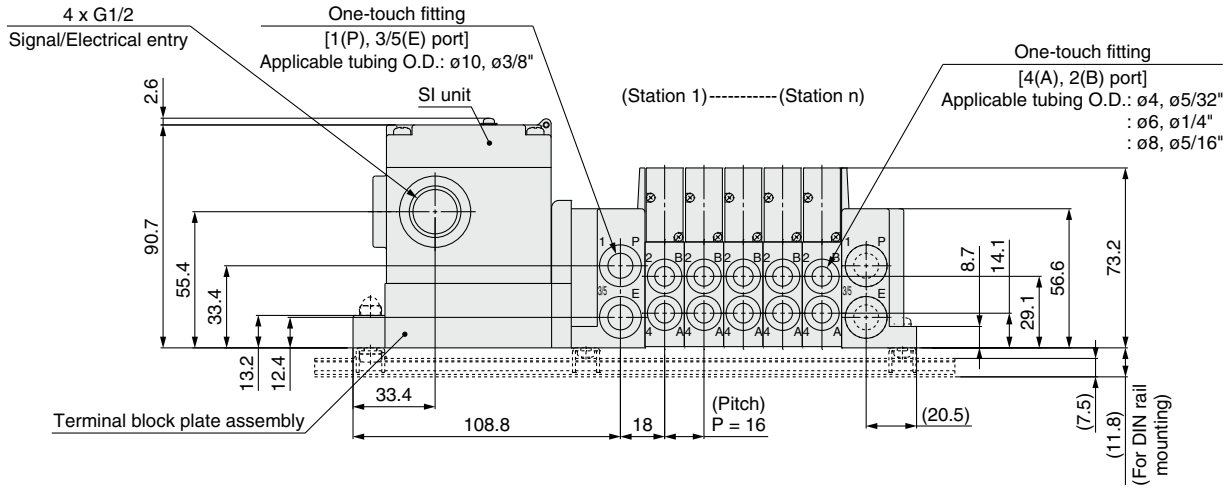

*1 Refer to page 158 for dimensions of the external pilot, silencer, elbow fittings, and slide locking manual override.
* These figures show the "SS5Y5-10S4V-05D-C8."
* Refer to page 163 for dimensions of A or B port top-ported type.

n: Stations	2	3	4	5	6	7	8	9	10	11	12	13	14	15	16
L1	181.3	197.3	213.3	229.3	245.3	261.3	277.3	293.3	309.3	325.3	341.3	357.3	373.3	389.3	405.3
L2	80	96	112	128	144	160	176	192	208	224	240	256	272	288	304
L3	210.5	223	248	260.5	273	285.5	310.5	323	335.5	360.5	373	385.5	398	423	435.5
L4	200	212.5	237.5	250	262.5	275	300	312.5	325	350	362.5	375	387.5	412.5	425
L5	14.5	13	17.5	15.5	14	12	16.5	15	13	17.5	16	14	12.5	17	15

Dimensions: SY7000 Series

SS5Y7-10S4□- Stations U/D/B - C6, N7 / C8, N9 / C10, N11 / C12 (D)

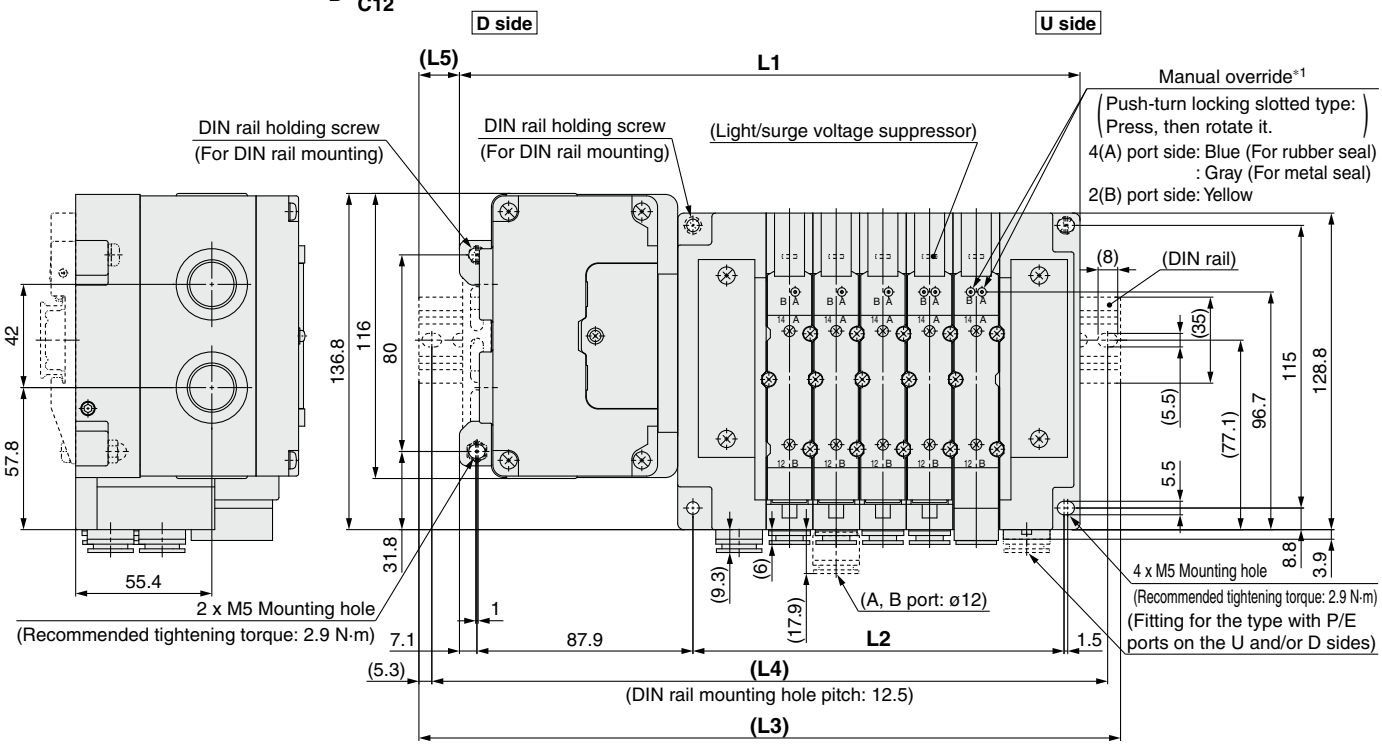

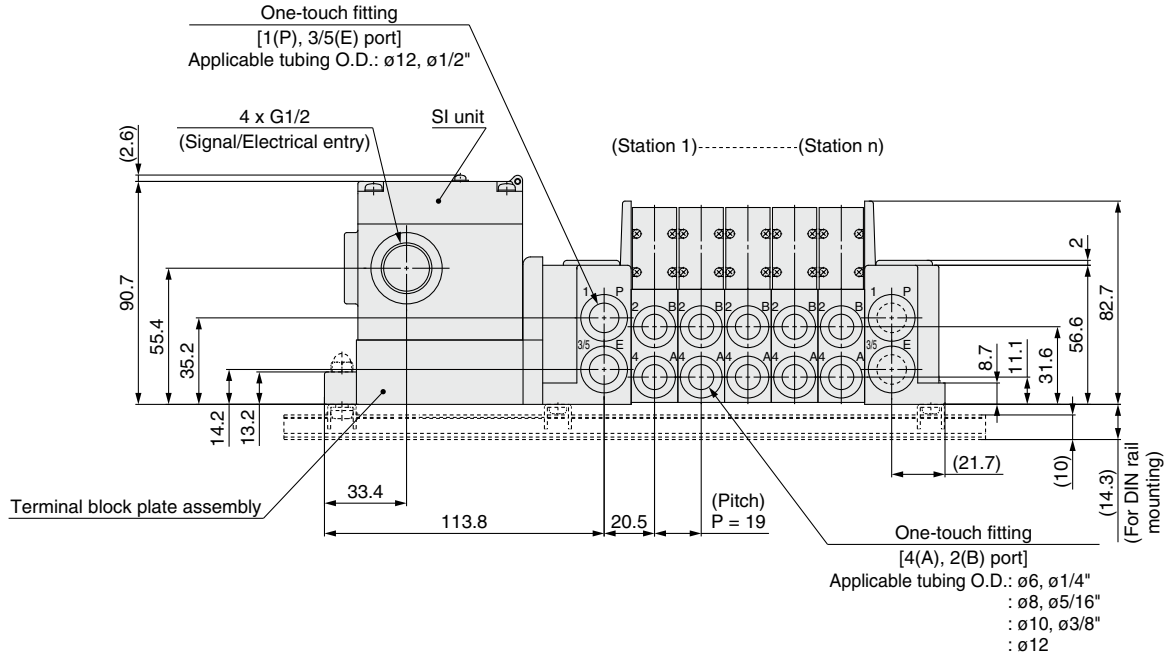

*1 Refer to page 159 for dimensions of the external pilot, silencer, elbow fittings, and slide locking manual override.
* These figures show the "SS5Y7-10S4V-05D-C10."
* Refer to page 164 for dimensions of A or B port top-ported type.

n: Stations	2	3	4	5	6	7	8	9	10	11	12	13	14	15	16
L1	195.5	214.5	233.5	252.5	271.5	290.5	309.5	328.5	347.5	366.5	385.5	404.5	423.5	442.5	461.5
L2	94	113	132	151	170	189	208	227	246	265	284	303	322	341	360
L3	223	248	260.5	285.5	298	323	335.5	360.5	373	398	410.5	435.5	448	473	485.5
L4	212.5	237.5	250	275	287.5	312.5	325	350	362.5	387.5	400	425	437.5	462.5	475
L5	14	17	13.5	16.5	13.5	16.5	13	16	13	16	12.5	15.5	12.5	15.5	12

Plug-in Connector Connecting Base

EX126

Type 12
Top Ported

SY3000/5000/7000 Series

How to Order Manifolds

Refer to pages 162 to 164 for the dimensions of Type 12/Top-ported type.

SS5Y 3 – 12S4 V – 05 U □ – □ □

❶ ❷ ❸ ❹ ❺ ❻ ❼

❶ Series

3	SY3000
5	SY5000
7	SY7000

❷ SI unit

0	Without SI unit
V	CC-Link (Positive common NPN)

∗ Only a terminal block plate is mounted for the valve without SI unit.

❸ Valve stations

Symbol	Stations	Note
02	2 stations	Double wiring∗1
⋮	⋮	
08	8 stations	
02	2 stations	Specified layout∗2 (Up to 16 solenoids available)
⋮	⋮	
16	16 stations	

∗1 Double wiring: 2-position single, double, 3-position, and 4-position valves can be used on all manifold stations.
Use of a 2-position single solenoid will result in an unused control signal. If this is not desired, order with a specified layout.

∗2 Specified layout: Indicate the wiring specifications on the manifold specification sheet. (Note that 2-position double, 3-position, and 4-position valves cannot be used where single wiring has been specified.)

∗ This also includes the number of the blanking plate assembly.

❹ P, E port entry

U∗1	U side (2 to 10 stations)
D∗1	D side (2 to 10 stations)
B	Both sides (2 to 16 stations)

∗1 ❺ For type "S", SUP/EXH block assembly with a built-in silencer, choose U or D for P, E port entry.

❺ SUP/EXH block assembly

Nil	Internal pilot
S	Internal pilot, Built-in silencer
R	External pilot

∗ The P and E ports are only available on the U and D sides for the built-in silencer type. 3/5(E) port is plugged. The silencer exhaust port is located on the opposite side of the P and E port entry. (Example: When the P and E port entry is on the D side, the silencer exhaust port is on the U side.)

∗ When the built-in silencer type is used, keep the exhaust port from coming into direct contact with water or other liquids.

How to Order Manifold Assembly

Example (SS5Y3-12S4V-□-□)

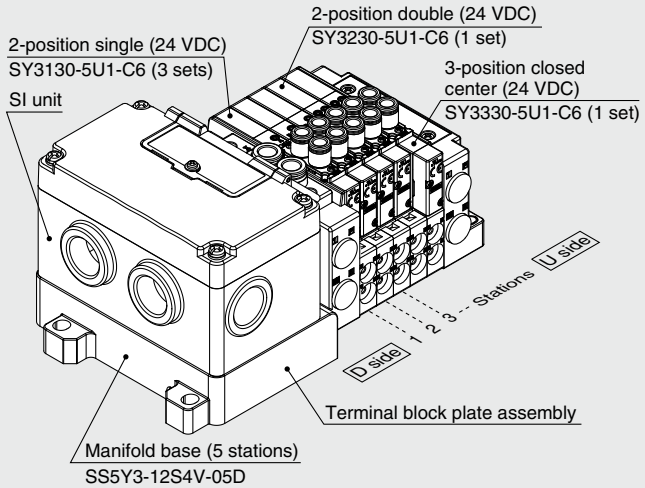

SS5Y3-12S4V-05D ··· 1 set (Type 12 5-station manifold base part no.)
∗SY3130-5U1-C6 ····· 3 sets (2-position single part no.)
∗SY3230-5U1-C6 ····· 1 set (2-position double part no.)
∗SY3330-5U1-C6 ····· 1 set (3-position closed center part no.)

→ The asterisk denotes the symbol for the assembly. Prefix it to the part numbers of the valve, etc.

- For the valve arrangement, the valve closest to the D side is considered the 1st station.
- Under the manifold part number, state the valves to be mounted in order starting with the 1st station as shown in the figure above. If the arrangement becomes too complicated, specify the details on a manifold specification sheet.

❻ P, E port size (One-touch fittings)

Symbol	SY3000	SY5000	SY7000
Nil	ø8	ø10	ø12
N	ø5/16"	ø3/8"	ø1/2"

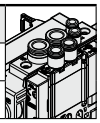

∗ For N, sizes are in inches.

❼ Mounting

Nil	Direct mounting	
D	DIN rail mounting (With DIN rail)	
D0	DIN rail mounting (Without DIN rail)	
D3	For 3 stations	Specify a length longer than that of the standard rail.
⋮	⋮	
D16	For 16 stations	

∗ Refer to page 295 for the fixation of DIN rail mounting type manifold.

For details on the EX126 Integrated Type (For Output) Serial Transmission System, refer to the **Web Catalog** and the Operation Manual. For the part numbers of the SI units to be mounted, refer to page 195. Please download the Operation Manual via the SMC website, https://www.smcworld.com

SMC

How to Order Valves (With mounting screw)

Refer to page 15 for valve specifications.

SY 3 1 3 0 □ □ □ □ – 5 □ □ 1 – C6 □ – □

❶ ❷ ❸ ❹ ❺ ❻ ❼ ❽ ❾ ❿ ⓫ ⓬ ⓭

❸: Top ported

❶ Series

3	SY3000
5	SY5000
7	SY7000

❷ Type of actuation

1	2-position	Single
2		Double
3	3-position	Closed center
4		Exhaust center
5		Pressure center
A*1	4-position dual 3-port	N.C./N.C.
B*1		N.O./N.O.
C*1		N.C./N.O.

*1 Only the rubber seal type is available for the 4-position dual 3-port valve.

❸ Seal type

0	Rubber seal
1	Metal seal

❹ Pilot type

Nil	Internal pilot
R	External pilot

❺ Back pressure check valve (Built-in valve type)

Nil	None
H	Built-in

* Only the rubber seal type is available. A manifold installed type is available if a back pressure check valve with a metal seal is required. Refer to page 212 for ordering examples. However, it is not recommended to use the built-in valve type and the manifold installed type at the same time because it will reduce the flow.
* The built-in valve type back pressure check valve is not available for the 3-position type or the SY7000.

❻ Pilot valve option

Nil	Standard (0.7 MPa)
B	Quick response type (0.7 MPa)
K*1	High pressure type (1.0 MPa)

*1 Only the metal seal type is available for the high pressure type.

❼ Coil type

Nil	Standard
T	With power saving circuit (Continuous duty type)

* Be sure to select the power saving circuit type if the valve is to be continuously energized for long periods of time.
* Be careful of the energizing time when the power saving circuit is selected. Refer to page 292 for details.

❽ Rated voltage

5	24 VDC

❾ Light/surge voltage suppressor and common specification

Symbol	With light	Surge voltage suppressor	Common specification
R	—	●	Non-polar
U	●		
S	—		Positive common
Z	●		

* Only "Z" type is available with a power saving circuit.

❿ Manual override

Nil: Non-locking push type

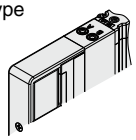

D: Push-turn locking slotted type

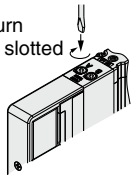

E: Push-turn locking lever type

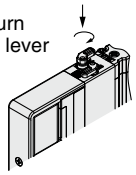

F: Slide locking type

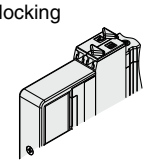

* Refer to page 34 for the safety slide locking manual override.

⓫ A, B port size

Thread piping

Symbol	Port size	Applicable series
M5	M5 x 0.8	SY3000
01	1/8	SY5000
02	1/4	SY7000

One-touch fitting (Metric)

Symbol	A, B port	SY3000	SY5000	SY7000
C2	ø2	●	—	—
C3	ø3.2	●	—	—
C4	ø4	●	●	—
C6	ø6	●	●	●
C8	ø8	—	●	●
C10	ø10	—	—	●
C12	ø12	—	—	●

One-touch fitting (Inch)

Symbol	A, B port	SY3000	SY5000	SY7000
N1	ø1/8"	●	—	—
N3	ø5/32"	●	●	—
N7	ø1/4"	●	●	●
N9	ø5/16"	—	●	●
N11	ø3/8"	—	—	●

⓬ Thread type

Nil	Rc
F	G
N	NPT
T	NPTF

* Only Nil is available for M5.

⓭ Type of mounting screw

Nil	Round head combination screw
B	Hexagon socket head cap screw
K	Round head combination screw (Drop prevention type)
H	Hexagon socket head cap screw (Drop prevention type)

* For "K" and "H," the valve body cover has a drop prevention construction to stop the mounting screws from falling out when the valve is removed for maintenance, etc.
* **When ordering a valve individually, the base gasket is not included.**
  Since the base gasket is attached to the manifold, please order the base gasket separately if it is needed for maintenance. Refer to page 198 for base gasket and mounting screw part numbers.
* "B" and "H" cannot be selected for the individual SUP/EXH spacer assembly or interface regulator.

Protective class class Ⅲ (Mark: Ⅲ)

Type 10
Side Ported

Type 11
Bottom Ported

Plug-in Connector Connecting Base

EX120

SY3000/5000/7000 Series

CE UKCA RoHS

How to Order Manifolds

Refer to pages 160 (SY5000) and 161 (SY7000) for the dimensions of Type 11/Bottom-ported type.

SS5Y [3] – [10] S3 [R1] – [05] [U] [ ] – [C6] [ ]

❶ ❷ ❸ ❹ ❺ ❻ ❼ ❽

❶ Series

3	SY3000
5	SY5000
7	SY7000

❷ Type

10	Side ported
11	Bottom ported*1

*1 The SY5000 manifold base is used for the bottom-ported SY3000. When ordering, refer to the "Plug-in Mixed Mounting Type Manifold" (from page 165).

❸ SI unit

0	Without SI unit	
Q	DeviceNet® (Positive common NPN)	
R1	OMRON CompoBus/S (Positive common NPN)	16 outputs
R2		8 outputs
V	CC-Link (Positive common NPN)	
ZB*1	CompoNet®	Positive common NPN
ZBN*1		Negative common PNP

*1 The communication connector (for the opposite side) is not provided. Please order it separately.

* Ensure a match with the common specification of the valve to be used.

❹ Valve stations

Symbol	Stations	Note
02	2 stations	Double wiring*1
⋮	⋮	
08	8 stations	
02	2 stations	Specified layout*2 (Up to 16 solenoids available)
⋮	⋮	
16	16 stations	

*1 Double wiring: 2-position single, double, 3-position, and 4-position valves can be used on all manifold stations.
Use of a 2-position single solenoid will result in an unused control signal. If this is not desired, order with a specified layout.

*2 Specified layout: Indicate the wiring specifications on the manifold specification sheet. (Note that 2-position double, 3-position, and 4-position valves cannot be used where single wiring has been specified.)

* This also includes the number of the blanking plate assembly.

* Since R2 type SI unit has 8 outputs, note that up to 8 solenoids can be accommodated.

❺ P, E port entry

U	U side (2 to 10 stations)
D	D side (2 to 10 stations)
B	Both sides (2 to 16 stations)

❻ SUP/EXH block assembly

Nil	Internal pilot
S	Internal pilot, Built-in silencer
R	External pilot

* 3/5(E) port is plugged for the built-in silencer type.

How to Order Manifold Assembly

Example (SS5Y3-10S3V-□)

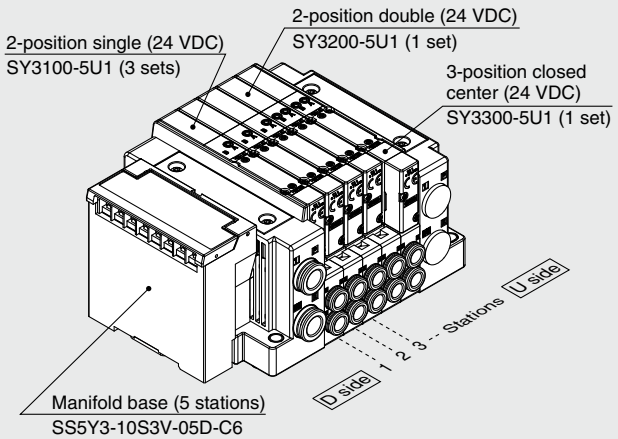

SS5Y3-10S3V-05D-C6 ··· 1 set (Type 10 5-station manifold base part no.)
***SY3100-5U1** ····· **3 sets (2-position single part no.)**
***SY3200-5U1** ····· **1 set (2-position double part no.)**
***SY3300-5U1** ····· **1 set (3-position closed center part no.)**
The asterisk denotes the symbol for the assembly. Prefix it to the part numbers of the valve, etc.

- For the valve arrangement, the valve closest to the D side is considered the 1st station.
- Under the manifold part number, state the valves to be mounted in order starting with the 1st station as shown in the figure above. If the arrangement becomes too complicated, specify the details on a manifold specification sheet.

* When mixing top-ported configurations, select from those listed on page 156. In such cases, use caution as there is also output on the A and B ports on the base side.
Specify on the manifold specification sheet if plugs are required for the A and B ports on the base side.

For details on the EX120 Integrated Type (For Output) Serial Transmission System, refer to the **Web Catalog** and the Operation Manual. For the part numbers of the SI units to be mounted, refer to page 196. Please download the Operation Manual via the SMC website, https://www.smcworld.com

❼ A, B port size (Metric/One-touch fitting)

Symbol	A, B port		Type 10/Side ported			Type 11/Bottom ported	
			SY3000	SY5000	SY7000	SY5000	SY7000
C2	Straight	ø2	●	—	—	—	—
C3		ø3.2	●	—	—	—	—
C4		ø4	●	●	—	●	—
C6		ø6	●	●	●	●	●
C8		ø8	—	●	●	●	●
C10		ø10	—	—	●	—	●
C12		ø12	—	—	●	—	●
CM*1		Straight port, mixed sizes	●	●	●	●	●
L4	Elbow*2 Upward	ø4	●	●	—	—	—
L6		ø6	●	●	●	—	—
L8		ø8	—	●	●	—	—
L10		ø10	—	—	●	—	—
L12		ø12	—	—	●	—	—
B4	Elbow*2 Downward	ø4	●	●	—	—	—
B6		ø6	●	●	●	—	—
B8		ø8	—	●	●	—	—
B10		ø10	—	—	●	—	—
B12		ø12	—	—	●	—	—
LM*1		Elbow port, mixed sizes (Including upward and downward piping)	●	●	●	—	—
P, E port size (One-touch fittings)			ø8	ø10	ø12	ø10	ø12

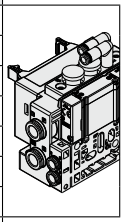
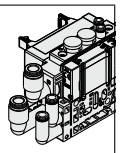
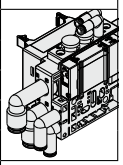

A, B port size (Inch/One-touch fitting)

Symbol	A, B port		Type 10/Side ported			Type 11/Bottom ported	
			SY3000	SY5000	SY7000	SY5000	SY7000
N1	Straight	ø1/8"	●	—	—	—	—
N3		ø5/32"	●	●	—	●	—
N7		ø1/4"	●	●	●	●	●
N9		ø5/16"	—	●	●	●	●
N11		ø3/8"	—	—	●	—	●
CM*1		Straight port, mixed sizes	●	●	●	●	●
LN3	Elbow*2 Upward	ø5/32"	●	—	—	—	—
LN7		ø1/4"	●	●	—	—	—
LN9		ø5/16"	—	●	—	—	—
LN11		ø3/8"	—	—	●	—	—
BN3	Elbow*2 Downward	ø5/32"	●	—	—	—	—
BN7		ø1/4"	●	●	—	—	—
BN9		ø5/16"	—	●	—	—	—
BN11		ø3/8"	—	—	●	—	—
LM*1		Elbow port, mixed sizes (Including upward and downward piping)	●	●	●	—	—
P, E port size (One-touch fittings)			ø5/16"	ø3/8"	ø1/2"	ø3/8"	ø1/2"

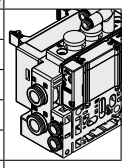
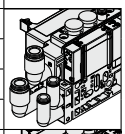
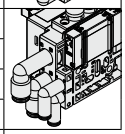

*1 Indicate the sizes on the manifold specification sheet in the case of "CM" or "LM."
The direction of P, E port fittings is the same as for the A, B port. If selecting "LM," indicate it on the manifold specification sheet for the P, E port fitting direction.

*2 To avoid interference with the body or piping, select a downward elbow port when mounting the optional spacer assembly (pages 204 to 206).

❽ Mounting and Option

Symbol	Mounting	Option	
		Name plate	Station number
Nil	Direct mounting	—	—
AA		●	●
BA		●	—
D□	DIN rail mounting	—	—
A□		●	●
B□		●	—

* Enter the number of stations inside □ when it is larger than the number of valve stations. (Refer to "DIN Rail Option" below.)
* Only direct mounting is available for the type 11 bottom-ported type.
* Refer to page 295 for the fixation of DIN rail mounting type manifold.

DIN Rail Option

Nil	Standard length	
0	Without DIN rail (with bracket)	
3	For 3 stations	Specify a longer rail than the total length of specified stations.
⋮	⋮	
16	For 16 stations	

* If the DIN rail must be mounted without an SI unit, select D0. Then, refer to L3 of the dimensions for the DIN rail length and order separately. (Refer to page 203 for the DIN rail part number.)

Protective class class Ⅲ (Mark: ⧫)

How to Order Valves (With mounting screw)

Refer to page 15 for valve specifications.

SY 3 1 0 0 □ □ □ □ – 5 □ □ 1 – □

❶ ❷ ❸ ❹ ❺ ❻ ❼ ❽ ❾ ❿ ⓫

❸ Base mounted

❶ Series

3	SY3000
5	SY5000
7	SY7000

❷ Type of actuation

1	2-position	Single
2		Double
3	3-position	Closed center
4		Exhaust center
5		Pressure center
A*1	4-position dual 3-port	N.C./N.C.
B*1		N.O./N.O.
C*1		N.C./N.O.

*1 Only the rubber seal type is available for the 4-position dual 3-port valve.

❸ Seal type

0	Rubber seal
1	Metal seal

❹ Pilot type

Nil	Internal pilot
R	External pilot

❺ Back pressure check valve (Built-in valve type)

Nil	None
H	Built-in

* Only the rubber seal type is available. A manifold installed type is available if a back pressure check valve with a metal seal is required. Refer to page 212 for ordering examples. However, it is not recommended to use the built-in valve type and the manifold installed type at the same time because it will reduce the flow.
* The built-in valve type back pressure check valve is not available for the 3-position type or the SY7000.

❻ Pilot valve option

Nil	Standard (0.7 MPa)
B	Quick response type (0.7 MPa)
K*1	High pressure type (1.0 MPa)

*1 Only the metal seal type is available for the high pressure type.

❼ Coil type

Nil	Standard
T	With power saving circuit (Continuous duty type)

* Be sure to select the power saving circuit type if the valve is to be continuously energized for long periods of time.
* Be careful of the energizing time when the power saving circuit is selected. Refer to page 292 for details.

❽ Rated voltage

5	24 VDC

❾ Light/surge voltage suppressor and common specification

Symbol	With light	Surge voltage suppressor	Common specification
R	—	●	Non-polar
U	●		
S	—		Positive common
Z	●		
NS	—		Negative common
NZ	●		

* Select “R,” “U,” “S,” or “Z” for the valve when the SI unit specification is positive common. Select “R,” “U,” “NS,” or “NZ” for the valve when the SI unit specification is ZBN (negative common).
* Only “Z” and “NZ” types are available with a power saving circuit.

❿ Manual override

Nil: Non-locking push type	**D**: Push-turn locking slotted type
E: Push-turn locking lever type	**F**: Slide locking type

* Refer to page 34 for the safety slide locking manual override.

⓫ Type of mounting screw

Nil	Round head combination screw
B	Hexagon socket head cap screw
K	Round head combination screw (Drop prevention type)
H	Hexagon socket head cap screw (Drop prevention type)

* For “K” and “H,” the valve body cover has a drop prevention construction to stop the mounting screws from falling out when the valve is removed for maintenance, etc.
* **When ordering a valve individually, the base gasket is not included.**
  Since the base gasket is attached to the manifold, please order the base gasket separately if it is needed for maintenance. Refer to page 198 for base gasket and mounting screw part numbers.
* “B” and “H” cannot be selected for the individual SUP/EXH spacer assembly, interface regulator, or double check spacer assembly with residual pressure release valve.

⚠ Protective class class Ⅲ (Mark: Ⅲ)

Dimensions: SY3000 Series

SS5Y3-10S3□-Stations U/D/B - C2/C3, N1/C4, N3/C6, N7 (D)

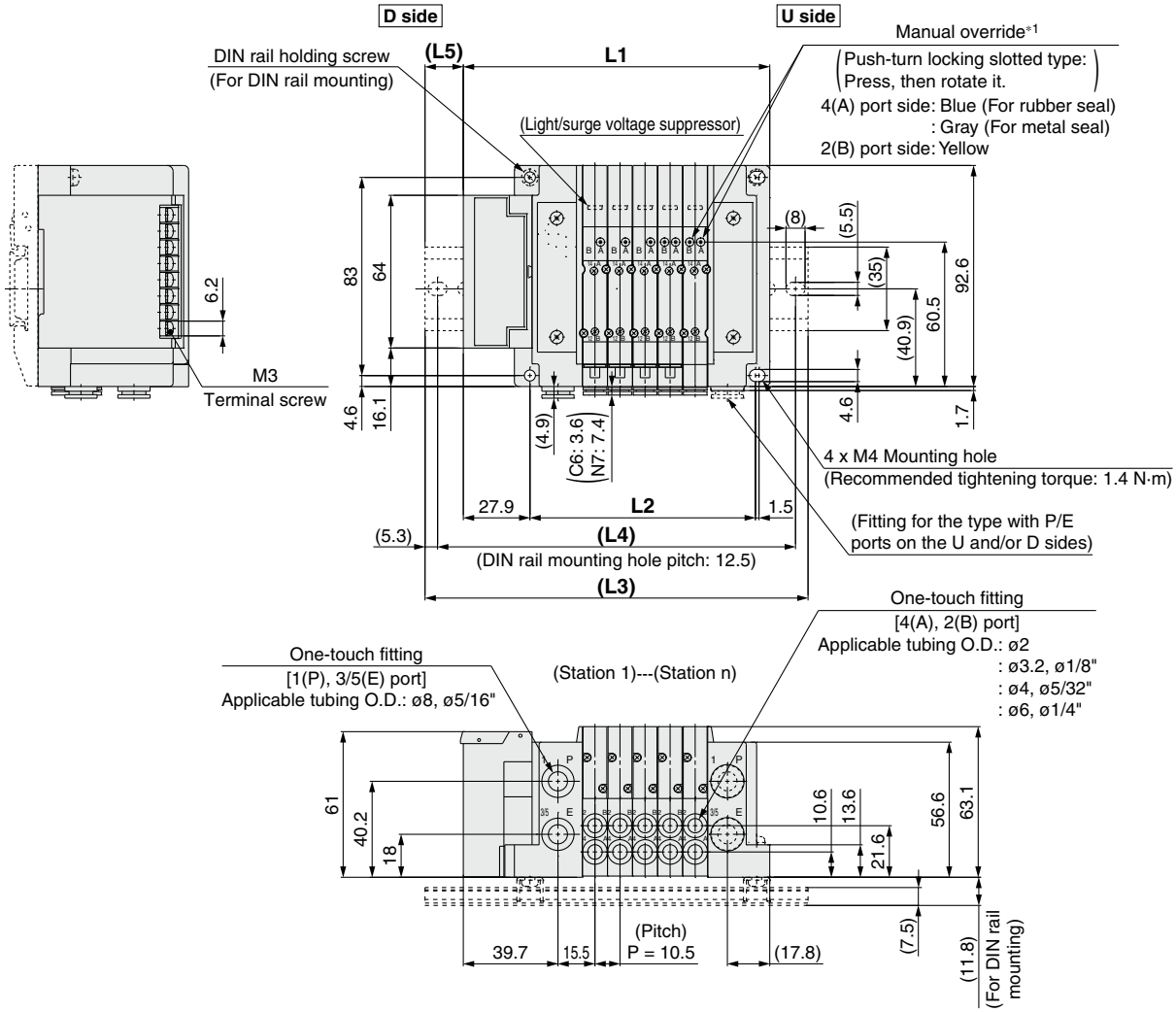

*1 Refer to page 157 for dimensions of the external pilot, silencer, elbow fittings, and slide locking manual override.
* These figures show the "SS5Y3-10S3V-05D-C6."
* Refer to page 162 for dimensions of A or B port top-ported type.

n: Stations	2	3	4	5	6	7	8	9	10	11	12	13	14	15	16
L1	96.9	107.4	117.9	128.4	138.9	149.4	159.9	170.4	180.9	191.4	201.9	212.4	222.9	233.4	243.9
L2	63	73.5	84	94.5	105	115.5	126	136.5	147	157.5	168	178.5	189	199.5	210
L3	123	135.5	148	160.5	173	173	185.5	198	210.5	223	235.5	235.5	248	260.5	273
L4	112.5	125	137.5	150	162.5	162.5	175	187.5	200	212.5	225	225	237.5	250	262.5
L5	13	14	15	16	17	12	13	14	15	16	17	11.5	12.5	13.5	14.5

Plug-in
Connector Connecting Base

Type 10/Side Ported
EX120

Dimensions: SY5000 Series

SS5Y5-10S3□-Stations U C4, N3 / D C6, N7 / B C8, N9 (D)

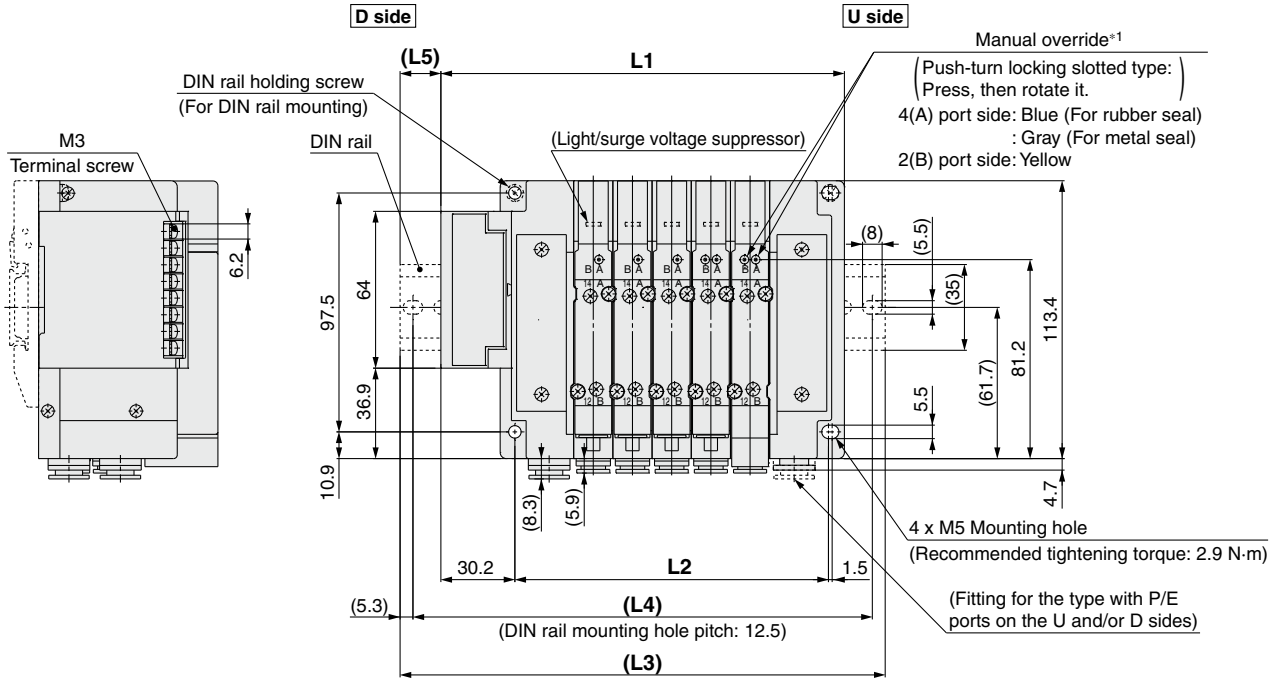

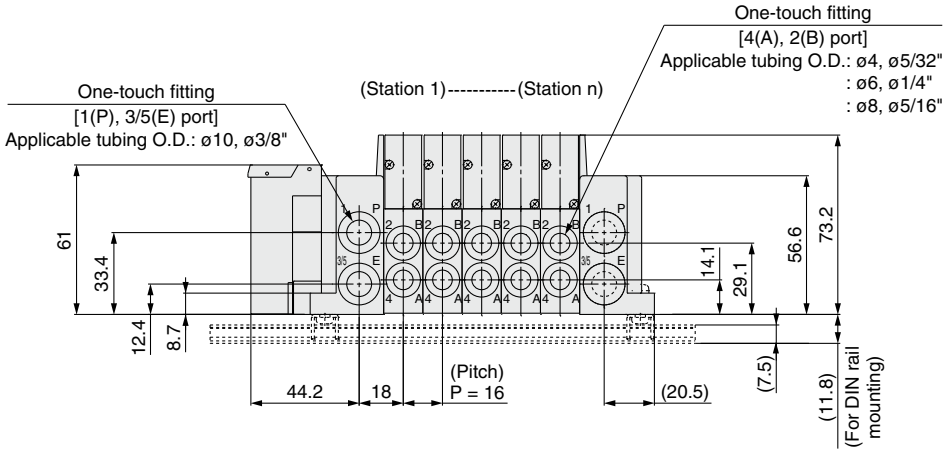

*1 Refer to page 158 for dimensions of the external pilot, silencer, elbow fittings, and slide locking manual override.
* These figures show the "SS5Y5-10S3V-05D-C8."
* Refer to page 163 for dimensions of A or B port top-ported type.

n: Stations	2	3	4	5	6	7	8	9	10	11	12	13	14	15	16
L1	116.7	132.7	148.7	164.7	180.7	196.7	212.7	228.7	244.7	260.7	276.7	292.7	308.7	324.7	340.7
L2	80	96	112	128	144	160	176	192	208	224	240	256	272	288	304
L3	148	160.5	173	198	210.5	223	248	260.5	273	285.5	310.5	323	335.5	348	373
L4	137.5	150	162.5	187.5	200	212.5	237.5	250	262.5	275	300	312.5	325	337.5	362.5
L5	15.5	14	12	16.5	15	13	17.5	16	14	12.5	17	15	13.5	11.5	16

Plug-in Connector Connecting Base | Type 10/Side Ported | EX120

Dimensions: SY7000 Series

SS5Y7-10S3□-Stations U/D/B - C6, N7 / C8, N9 / C10, N11 / C12 (D)

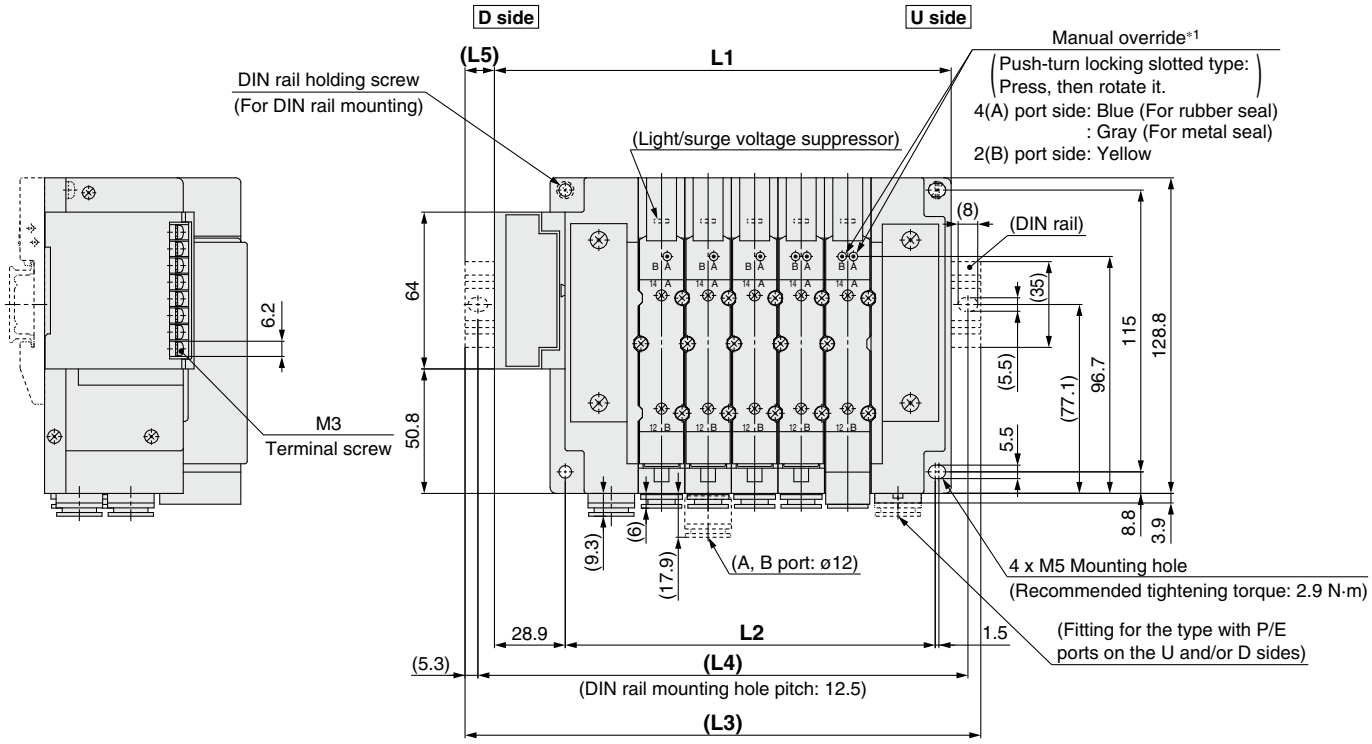

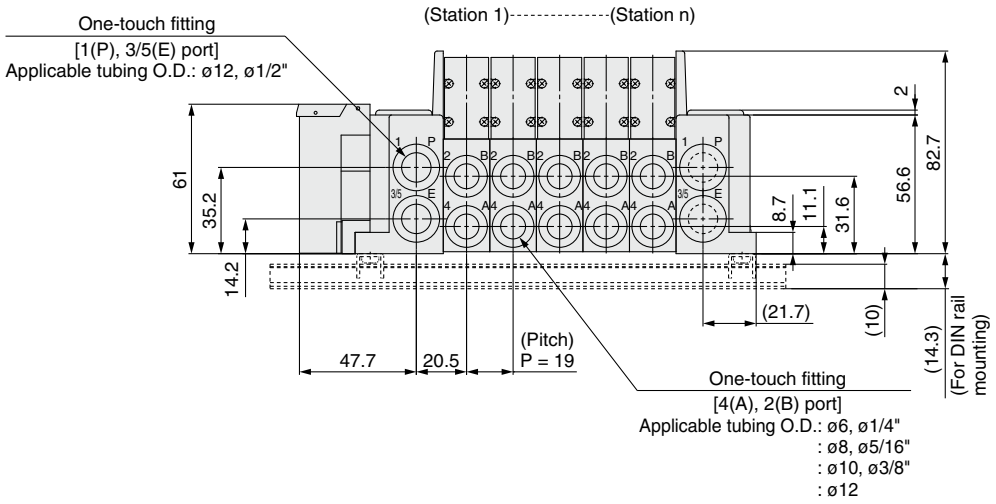

*1 Refer to page 159 for dimensions of the external pilot, silencer, elbow fittings, and slide locking manual override.
* These figures show the "SS5Y7-10S3V-05D-C10."
* Refer to page 164 for dimensions of A or B port top-ported type.

n: Stations	2	3	4	5	6	7	8	9	10	11	12	13	14	15	16
L1	129.4	148.4	167.4	186.4	205.4	224.4	243.4	262.4	281.4	300.4	319.4	338.4	357.4	376.4	395.4
L2	94	113	132	151	170	189	208	227	246	265	284	303	322	341	360
L3	160.5	173	198	210.5	235.5	248	273	285.5	310.5	335.5	348	373	385.5	410.5	423
L4	150	162.5	187.5	200	225	237.5	262.5	275	300	325	337.5	362.5	375	400	412.5
L5	15.5	12.5	15.5	12	15	12	15	11.5	14.5	17.5	14.5	17.5	14	17	14

Plug-in Connector Connecting Base

EX120

Type 12
Top Ported

SY3000/5000/7000 Series

How to Order Manifolds

SS5Y 3 – 12S3 R1 – 05 U □ – □ □

❶ ❷ ❸ ❹ ❺ ❻ ❼

Refer to pages 162 to 164 for the dimensions of Type 12/Top-ported type.

❶ Series

3	SY3000
5	SY5000
7	SY7000

❷ SI unit

0	Without SI unit	
Q	DeviceNet® (Positive common NPN)	
R1	OMRON CompoBus/S (Positive common NPN)	16 outputs
R2		8 outputs
V	CC-Link (Positive common NPN)	
ZB∗1	CompoNet®	Positive common NPN
ZBN∗1		Negative common PNP

∗1 The communication connector (for the opposite side) is not provided. Please order it separately.
∗ Ensure a match with the common specification of the valve to be used.

❸ Valve stations

Symbol	Stations	Note
02	2 stations	Double wiring∗1
⋮	⋮	
08	8 stations	
02	2 stations	Specified layout∗2 (Up to 16 solenoids available)
⋮	⋮	
16	16 stations	

∗1 Double wiring: 2-position single, double, 3-position, and 4-position valves can be used on all manifold stations.
Use of a 2-position single solenoid will result in an unused control signal. If this is not desired, order with a specified layout.
∗2 Specified layout: Indicate the wiring specifications on the manifold specification sheet. (Note that 2-position double, 3-position, and 4-position valves cannot be used where single wiring has been specified.)
∗ This also includes the number of the blanking plate assembly.
∗ Since R2 type SI unit has 8 outputs, note that up to 8 solenoids can be accommodated.

❹ P, E port entry

U∗1	U side (2 to 10 stations)
D∗1	D side (2 to 10 stations)
B	Both sides (2 to 16 stations)

∗1 ❺ For type "S", SUP/EXH block assembly with a built-in silencer, choose U or D for P, E port entry.

❺ SUP/EXH block assembly

Nil	Internal pilot
S	Internal pilot, Built-in silencer
R	External pilot

∗ The P and E ports are only available on the U and D sides for the built-in silencer type. 3/5(E) port is plugged. The silencer exhaust port is located on the opposite side of the P and E port entry. (Example: When the P and E port entry is on the D side, the silencer exhaust port is on the U side.)

How to Order Manifold Assembly

Example (SS5Y3-12S3V-□)

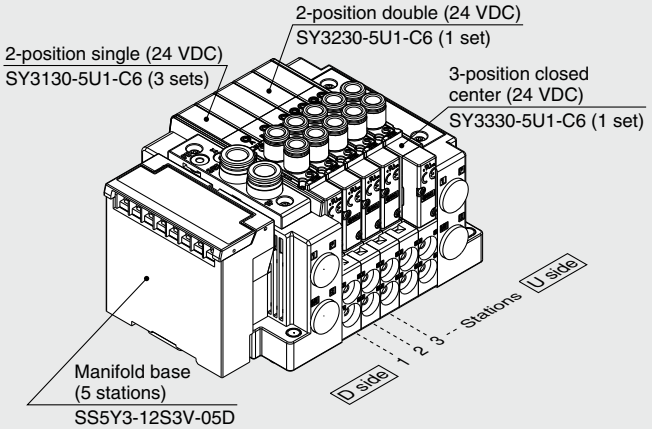

SS5Y3-12S3V-05D ··· 1 set (Type 12 5-station manifold base part no.)
∗SY3130-5U1-C6 ····· 3 sets (2-position single part no.)
∗SY3230-5U1-C6 ····· 1 set (2-position double part no.)
∗SY3330-5U1-C6 ····· 1 set (3-position closed center part no.)
→ The asterisk denotes the symbol for the assembly. Prefix it to the part numbers of the valve, etc.

- For the valve arrangement, the valve closest to the D side is considered the 1st station.
- Under the manifold part number, state the valves to be mounted in order starting with the 1st station as shown in the figure above. If the arrangement becomes too complicated, specify the details on a manifold specification sheet.

❻ P, E port size (One-touch fittings)

Symbol	SY3000	SY5000	SY7000
Nil	ø8	ø10	ø12
N	ø5/16"	ø3/8"	ø1/2"

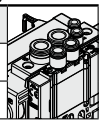

∗ For N, sizes are in inches.

❼ Mounting

Nil	Direct mounting	
D	DIN rail mounting (With DIN rail)	
D0	DIN rail mounting (Without DIN rail)	
D3	For 3 stations	Specify a length longer than that of the standard rail.
⋮	⋮	
D16	For 16 stations	

∗ If the DIN rail must be mounted without an SI unit, select D0. Then, refer to L3 of the dimensions for the DIN rail length and order separately. (Refer to page 203 for the DIN rail part number.)
∗ Refer to page 295 for the fixation of DIN rail mounting type manifold.

For details on the EX120 Integrated Type (For Output) Serial Transmission System, refer to the **Web Catalog** and the Operation Manual. For the part numbers of the SI units to be mounted, refer to page 196. Please download the Operation Manual via the SMC website, https://www.smcworld.com

How to Order Valves (With mounting screw)

Refer to page 15 for valve specifications.

SY 3 1 3 0 ☐ ☐ ☐ ☐ – 5 ☐ ☐ 1 – C6 ☐ – ☐

❶ ❷ ❸ ❹ ❺ ❻ ❼ ❽ ❾ ❿ ⓫ ⓬ ⓭

• Top ported

❶ Series

3	SY3000
5	SY5000
7	SY7000

❷ Type of actuation

1	2-position	Single
2		Double
3	3-position	Closed center
4		Exhaust center
5		Pressure center
A*1	4-position dual 3-port	N.C./N.C.
B*1		N.O./N.O.
C*1		N.C./N.O.

*1 Only the rubber seal type is available for the 4-position dual 3-port valve.

❸ Seal type

0	Rubber seal
1	Metal seal

❹ Pilot type

Nil	Internal pilot
R	External pilot

❺ Back pressure check valve (Built-in valve type)

Nil	None
H	Built-in

* Only the rubber seal type is available. A manifold installed type is available if a back pressure check valve with a metal seal is required. Refer to page 212 for ordering examples. However, it is not recommended to use the built-in valve type and the manifold installed type at the same time because it will reduce the flow.
* The built-in valve type back pressure check valve is not available for the 3-position type or the SY7000.

❻ Pilot valve option

Nil	Standard (0.7 MPa)
B	Quick response type (0.7 MPa)
K*1	High pressure type (1.0 MPa)

*1 Only the metal seal type is available for the high pressure type.

❼ Coil type

Nil	Standard
T	With power saving circuit (Continuous duty type)

* Be sure to select the power saving circuit type if the valve is to be continuously energized for long periods of time.
* Be careful of the energizing time when the power saving circuit is selected. Refer to page 292 for details.

❽ Rated voltage

5	24 VDC

❾ Light/surge voltage suppressor and common specification

Symbol	With light	Surge voltage suppressor	Common specification
R	—	●	Non-polar
U	●		
S	—		Positive common
Z	●		
NS	—		Negative common
NZ	●		

* Select "R," "U," "S," or "Z" for the valve when the SI unit specification is positive common. Select "R," "U," "NS," or "NZ" for the valve when the SI unit specification is ZBN (negative common).
* Only "Z" and "NZ" types are available with a power saving circuit.

❿ Manual override

Nil: Non-locking push type

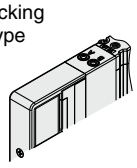

D: Push-turn locking slotted type

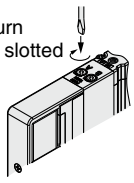

E: Push-turn locking lever type

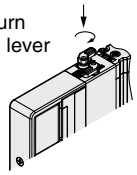

F: Slide locking type

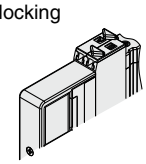

* Refer to page 34 for the safety slide locking manual override.

⓫ A, B port size

Thread piping

Symbol	Port size	Applicable series
M5	M5 x 0.8	SY3000
01	1/8	SY5000
02	1/4	SY7000

One-touch fitting (Metric)

Symbol	A, B port	SY3000	SY5000	SY7000
C2	ø2	●	—	—
C3	ø3.2	●	—	—
C4	ø4	●	●	—
C6	ø6	●	●	●
C8	ø8	—	●	●
C10	ø10	—	—	●
C12	ø12	—	—	●

One-touch fitting (Inch)

Symbol	A, B port	SY3000	SY5000	SY7000
N1	ø1/8"	●	—	—
N3	ø5/32"	●	●	—
N7	ø1/4"	●	●	●
N9	ø5/16"	—	●	●
N11	ø3/8"	—	—	●

⓬ Thread type

Nil	Rc
F	G
N	NPT
T	NPTF

* Only Nil is available for M5.

⓭ Type of mounting screw

Nil	Round head combination screw
B	Hexagon socket head cap screw
K	Round head combination screw (Drop prevention type)
H	Hexagon socket head cap screw (Drop prevention type)

* For "K" and "H," the valve body cover has a drop prevention construction to stop the mounting screws from falling out when the valve is removed for maintenance, etc.
* **When ordering a valve individually, the base gasket is not included.**
  Since the base gasket is attached to the manifold, please order the base gasket separately if it is needed for maintenance. Refer to page 198 for base gasket and mounting screw part numbers.
* "B" and "H" cannot be selected for the individual SUP/EXH spacer assembly or interface regulator.

Protective class class Ⅲ (Mark: Ⅲ)

Type 10
Side Ported

Type 11
Bottom Ported

Plug-in Connector Connecting Base

EX180

SY3000/5000/7000 Series

How to Order Manifolds

Refer to pages 160 (SY5000) and 161 (SY7000) for the dimensions of Type 11/Bottom-ported type.

SS5Y 3 – 10 S 8 Q □ □ – 05 U – C6 □

❶ ❷ ❸ ❹ ❺ ❻ ❼ ❽ ❾

❶ Series

3	SY3000
5	SY5000
7	SY7000

❷ Type

10	Side ported
11	Bottom ported*1

*1 The SY5000 manifold base is used for the bottom ported SY3000. When ordering, refer to the "Plug-in Mixed Mounting Type Manifold" (Refer to page 165).

❸ SI unit

0	Without SI unit
Q	DeviceNet®
V	CC-Link

* Only the connector block assembly is mounted for models without an SI unit.

❹ SI unit output polarity, Number of outputs

	32 outputs	16 outputs
Without SI unit	Nil	
Positive common (NPN)	2	3
Negative common (PNP)	4	5

* When "V" (CC-Link) is selected for the SI unit, only symbol "2" or "4" (32 outputs) can be selected.
* Ensure a match with the common specification of the valves to be used.

❺ Communication connector

Nil	T-branch type
A	Straight type

* The communication connector and power connector are shipped together with the manifold. The power connector is only available for the straight type.
* When not selecting an SI unit, the symbol will be "nil."

❻ Valve stations

In the case of the 32-output SI unit

Symbol	Stations	Note
02	2 stations	Double wiring*1
⋮	⋮	
16	16 stations	
02	2 stations	Specified layout*2 (Up to 32 solenoids available)
⋮	⋮	
24	24 stations	

In the case of the 16-output SI unit

Symbol	Stations	Note
02	2 stations	Double wiring*1
⋮	⋮	
08	8 stations	
02	2 stations	Specified layout*2 (Up to 16 solenoids available)
⋮	⋮	
16	16 stations	

*1 Double wiring: 2-position single, double, 3-position, and 4-position valves can be used on all manifold stations.
Use of a 2-position single solenoid will result in an unused control signal. If this is not desired, order with a specified layout.

*2 Specified layout: Indicate the wiring specifications on the manifold specification sheet. (Note that 2-position double, 3-position, and 4-position valves cannot be used where single wiring has been specified.)

* This also includes the number of the blanking plate assembly.
* For the product without the SI unit (S80), note the maximum number of solenoids of the SI unit that will be mounted. If the layout is specified, indicate it on the manifold specification sheet.

❼ P, E port entry, SUP/EXH block assembly

P, E port entry	Internal pilot	Internal pilot, Built-in silencer	External pilot
U side (2 to 10 stations)	U	C	G
D side (2 to 10 stations)	D	E	H
Both sides (2 to 24 stations)	B	F	J

* 3/5(E) port is plugged for the built-in silencer type.
* When the built-in silencer type is used, keep the exhaust port from coming in direct contact with water or other liquids.

How to Order Manifold Assembly

Example (SS5Y3-10S8□-□)

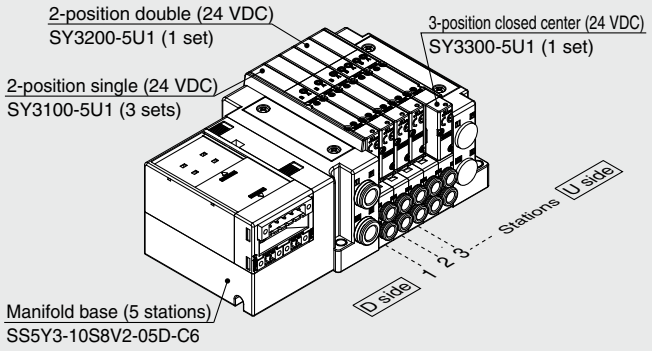

SS5Y3-10S8V2-05D-C6 ··· 1 set (Type 10 5-station manifold base part no.)
***SY3100-5U1 ····· 3 sets (2-position single part no.)**
***SY3200-5U1 ····· 1 set (2-position double part no.)**
***SY3300-5U1 ····· 1 set (3-position closed center part no.)**
→ The asterisk denotes the symbol for the assembly. Prefix it to the part numbers of the valve, etc.

- For the valve arrangement, the valve closest to the D side is considered the 1st station.
- Under the manifold part number, state the valves to be mounted in order starting with the 1st station as shown in the figure above. If the arrangement becomes too complicated, specify the details on a manifold specification sheet.

* When mixing top-ported configurations, select from those listed on page 156-8. In such cases, use caution as there is also output on the A and B ports on the base side. Specify on the manifold specification sheet if plugs are required for the A and B ports on the base side.

For details on the EX180 Integrated Type (For Output) Serial Transmission System, refer to the **Web Catalog** and the Operation Manual. For the part numbers of the SI units to be mounted, refer to page 196-1. Please download the Operation Manual via the SMC website: https://www.smcworld.com

❽ A, B port size (Metric/One-touch fitting)

Symbol	A, B port		Type 10/Side ported			Type 11/Bottom ported	
			SY3000	SY5000	SY7000	SY5000	SY7000
C2	Straight	ø2	●	—	—	—	—
C3		ø3.2	●	—	—	—	—
C4		ø4	●	●	—	●	—
C6		ø6	●	●	●	●	●
C8		ø8	—	●	●	●	●
C10		ø10	—	—	●	—	●
C12		ø12	—	—	●	—	●
CM*1		Straight port, mixed sizes	●	●	●	●	●
L4	Elbow*2 Upward	ø4	●	●	—	—	—
L6		ø6	●	●	●	—	—
L8		ø8	—	●	●	—	—
L10		ø10	—	—	●	—	—
L12		ø12	—	—	●	—	—
B4	Elbow*2 Downward	ø4	●	●	—	—	—
B6		ø6	●	●	●	—	—
B8		ø8	—	●	●	—	—
B10		ø10	—	—	●	—	—
B12		ø12	—	—	●	—	—
LM*1		Elbow port, mixed sizes (Including upward and downward piping)	●	●	●	—	—
P, E port size (One-touch fittings)			ø8	ø10	ø12	ø10	ø12

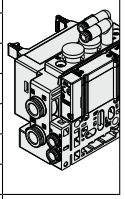
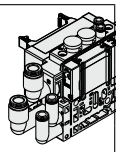
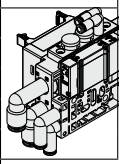

A, B port size (Inch/One-touch fitting)

Symbol	A, B port		Type 10/Side ported			Type 11/Bottom ported	
			SY3000	SY5000	SY7000	SY5000	SY7000
N1	Straight	ø1/8"	●	—	—	—	—
N3		ø5/32"	●	●	—	●	—
N7		ø1/4"	●	●	●	●	●
N9		ø5/16"	—	●	●	●	●
N11		ø3/8"	—	—	●	—	●
CM*1		Straight port, mixed sizes	●	●	●	●	●
LN3	Elbow*2 Upward	ø5/32"	●	—	—	—	—
LN7		ø1/4"	●	●	—	—	—
LN9		ø5/16"	—	●	—	—	—
LN11		ø3/8"	—	—	●	—	—
BN3	Elbow*2 Downward	ø5/32"	●	—	—	—	—
BN7		ø1/4"	●	●	—	—	—
BN9		ø5/16"	—	●	—	—	—
BN11		ø3/8"	—	—	●	—	—
LM*1		Elbow port, mixed sizes (Including upward and downward piping)	●	●	●	—	—
P, E port size (One-touch fittings)			ø5/16"	ø3/8"	ø1/2"	ø3/8"	ø1/2"

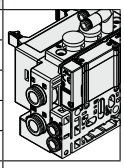
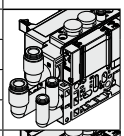
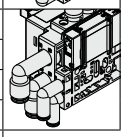

*1 Indicate the sizes on the manifold specification sheet in the case of “CM” or “LM.”
The direction of P, E port fittings is the same as for the A, B port. If selecting “LM,” indicate it on the manifold specification sheet for the P, E port fitting direction.

*2 To avoid interference with the body or piping, select a downward elbow port when mounting the optional spacer assembly (pages 204 to 207).

❾ Mounting and Option

Symbol	Mounting	Option	
		Name plate	Station number
Nil	Direct mounting	—	—
AA		●	●
BA		●	—
D□	DIN rail mounting	—	—
A□		●	●
B□		●	—

DIN Rail Option

Nil	Standard length	
0	Without DIN rail (with bracket)	
3	For 3 stations	Specify a longer rail than the total length of specified stations.
⋮	⋮	
24	For 24 stations	

* Enter the number of stations inside □ when it is larger than the number of valve stations. (Refer to “DIN Rail Option” above.)
* Only direct mounting is available for Type 11 (Bottom ported).
* Refer to page 295 for the fixation of DIN rail mounting type manifold.

⚠ Protective class class Ⅲ (Mark: ⧫)

How to Order Valves (With mounting screw)

Refer to page 15 for valve specifications.

SY 3 1 0 0 □ □ □ □ – 5 □ □ 1 – □

❶ ❷ ❸ ❹ ❺ ❻ ❼ ❽ ❾ ❿ ⓫

❸ Base mounted

❶ Series

3	SY3000
5	SY5000
7	SY7000

❷ Type of actuation

1	2-position	Single
2		Double
3	3-position	Closed center
4		Exhaust center
5		Pressure center
A∗1	4-position dual 3-port	N.C./N.C.
B∗1		N.O./N.O.
C∗1		N.C./N.O.

∗1 Only the rubber seal type is available for the 4-position dual 3-port valve.

❸ Seal type

0	Rubber seal
1	Metal seal

❹ Pilot type

Nil	Internal pilot
R	External pilot

❺ Back pressure check valve (Built-in valve type)

Nil	None
H	Built-in

∗ Only the rubber seal type is available. A manifold installed type is available if a back pressure check valve with a metal seal is required. Refer to page 212 for ordering examples. However, it is not recommended to use the built-in valve type and the manifold installed type at the same time because it will reduce the flow.

∗ The built-in valve type back pressure check valve is not available for the 3-position type or the SY7000.

❻ Pilot valve option

Nil	Standard (0.7 MPa)
B	Quick response type (0.7 MPa)
K∗1	High-pressure type (1.0 MPa)

∗1 Only the metal seal type is available for the high-pressure type.

❼ Coil type

Nil	Standard
T	With power-saving circuit (Continuous duty type)

∗ Be sure to select the power-saving circuit type when the valve is to be continuously energized for long periods of time.

∗ Be careful of the energizing time when the power-saving circuit is selected. Refer to page 292 for details.

❽ Rated voltage

5	24 VDC

❾ Light/surge voltage suppressor and common specification

Symbol	With light	Surge voltage suppressor	Common specification
R	—	●	Non-polar
U	●		
S	—		Positive common
Z	●		
NS	—		Negative common
NZ	●		

∗ Select “R,” “U,” “S,” or “Z” for the valve when the SI unit output polarity is positive common. Select “R,” “U,” “NS,” or “NZ” for the valve when the SI unit output polarity is negative common.

∗ Only “Z” and “NZ” are available with a power-saving circuit.

❿ Manual override

Nil: Non-locking push type	**D**: Push-turn locking slotted type
E: Push-turn locking lever type	**F**: Slide locking type

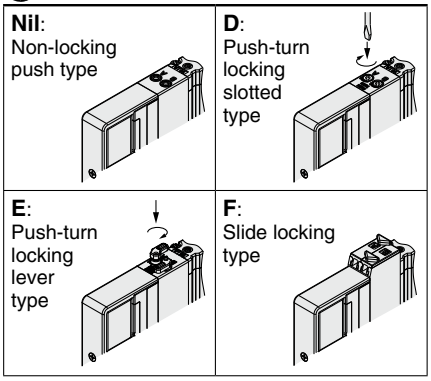

∗ Refer to page 34 for the safety slide locking manual override.

⓫ Type of mounting screw

Nil	Round head combination screw
B	Hexagon socket head cap screw
K	Round head combination screw (Drop prevention type)
H	Hexagon socket head cap screw (Drop prevention type)

∗ For “K” and “H,” the valve body cover has a drop prevention construction to stop the mounting screws from falling out when the valve is removed for maintenance, etc.

∗ **When ordering a valve individually, the base gasket is not included.**
Since the base gasket is attached to the manifold, please order the base gasket separately if it is needed for maintenance. Refer to page 198 for base gasket and mounting screw part numbers.

∗ “B” and “H” cannot be selected for the individual SUP/EXH spacer assembly, interface regulator, or double check spacer assembly with residual pressure release valve.

⚠ Protective class class Ⅲ (Mark: ⧫)

Plug-in Connector Connecting Base | Type 10/Side Ported | EX180

Dimensions: SY3000 Series

SS5Y3-10S8□□□-Stations U/D/B - C2/C3, N1/C4, N3/C6, N7 (D)

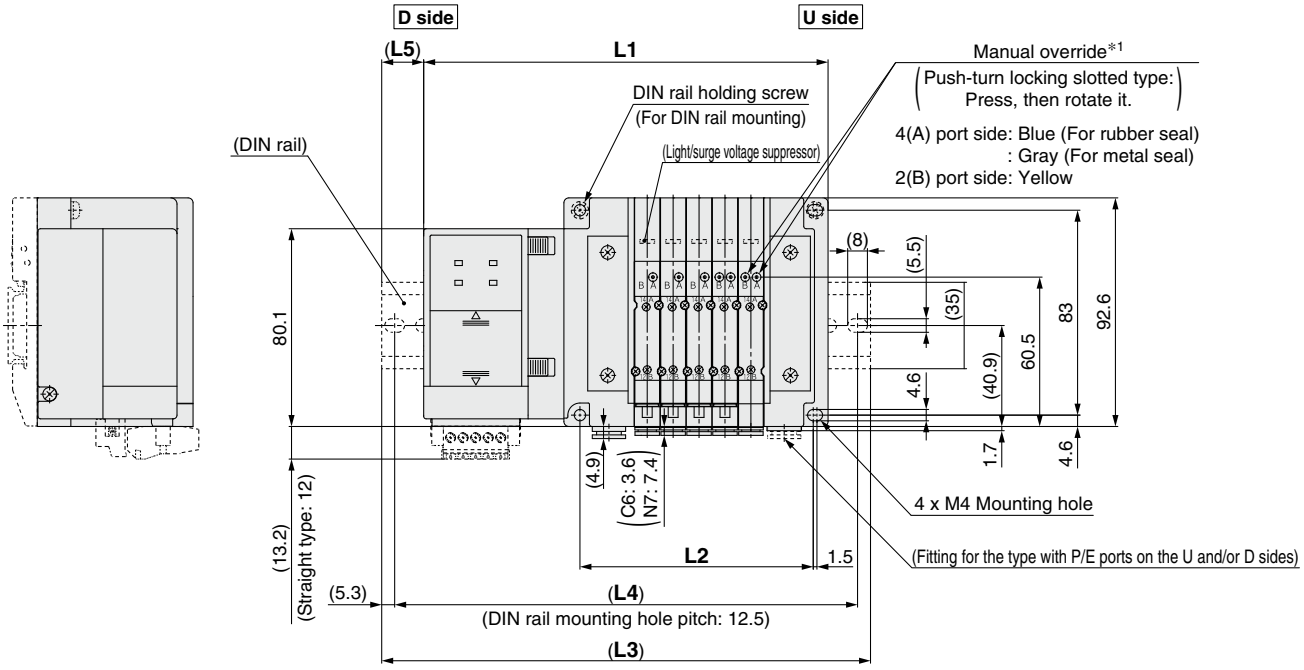

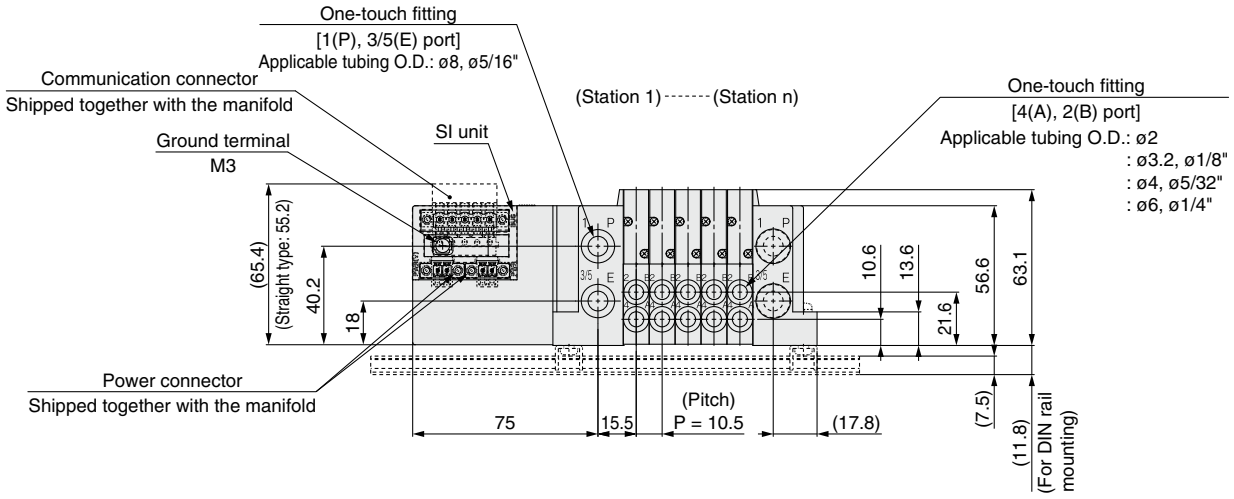

*1 Refer to page 157 for dimensions of the external pilot, silencer, elbow fittings, and slide locking manual override.
* These figures show the "SS5Y3-10S8V2-05D-C6."
* Refer to page 162 for dimensions of A or B port top-ported type.

n: Stations	2	3	4	5	6	7	8	9	10	11	12	13
L1	132.3	142.8	153.3	163.8	174.3	184.8	195.3	205.8	216.3	226.8	237.3	247.8
L2	63	73.5	84	94.5	105	115.5	126	136.5	147	157.5	168	178.5
L3	160.5	173	185.5	198	198	210.5	223	235.5	248	260.5	260.5	273
L4	150	162.5	175	187.5	187.5	200	212.5	225	237.5	250	250	262.5
L5	14	15	16	17	12	13	14	15	16	17	11.5	12.5

n: Stations	14	15	16	17	18	19	20	21	22	23	24
L1	258.3	268.3	279.3	289.8	300.3	310.8	321.3	331.8	342.3	352.8	363.3
L2	189	199.5	210	220.5	231	241.5	252	262.5	273	283.5	294
L3	285.5	298	310.5	323	335.5	335.5	348	360.5	373	385.5	398
L4	275	287.5	300	312.5	325	325	337.5	350	362.5	375	387.5
L5	13.5	14.5	15.5	16.5	17.5	12.5	13.5	14.5	15.5	16.5	17.5

Dimensions: SY5000 Series

SS5Y5-10S8□□□-Stations U C4, N3 / D C6, N7 / B C8, N9 (D)

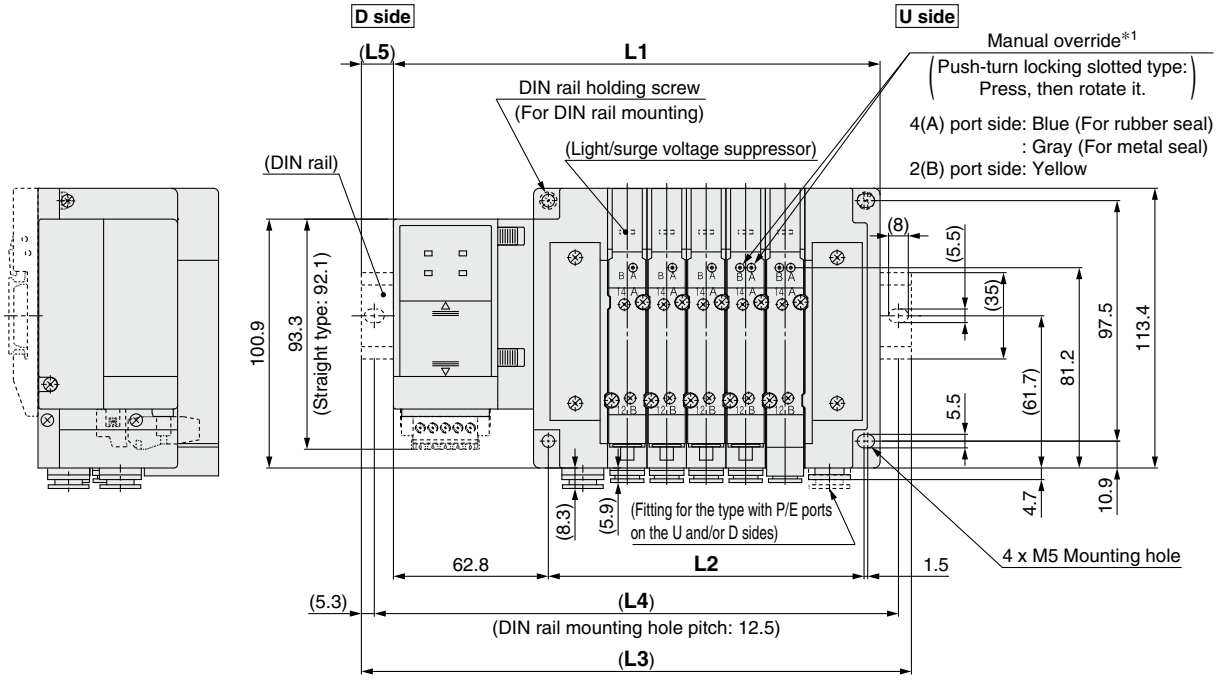

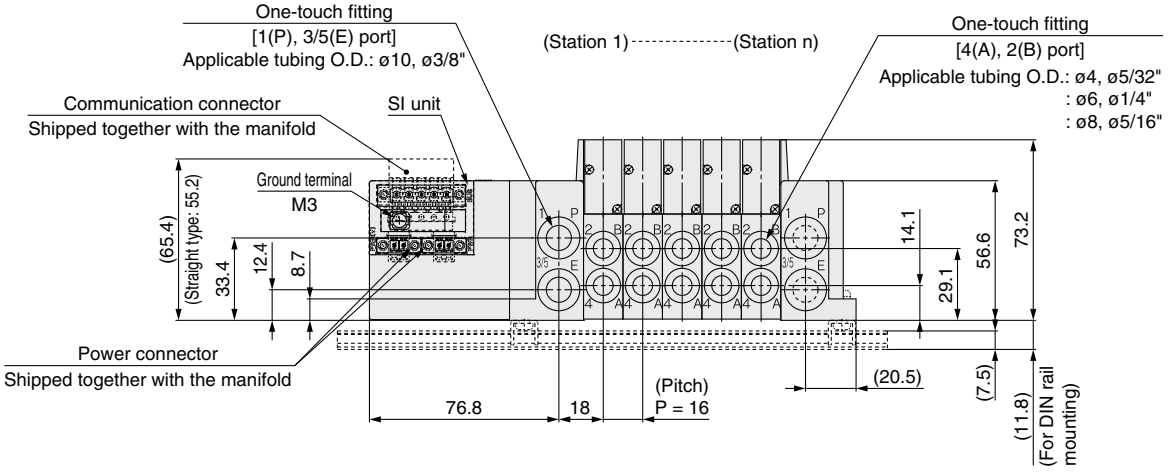

*1 Refer to page 158 for dimensions of the external pilot, silencer, elbow fittings, and slide locking manual override.
* These figures show the "SS5Y5-10S8V2-05D-C8."
* Refer to page 163 for dimensions of A or B port top-ported type.

n: Stations	2	3	4	5	6	7	8	9	10	11	12	13
L1	149.3	165.3	181.3	197.3	213.3	229.3	245.3	261.3	277.3	293.3	309.3	325.3
L2	80	96	112	128	144	160	176	192	208	224	240	256
L3	173	198	210.5	223	248	260.5	273	285.5	310.5	323	335.5	360.5
L4	162.5	187.5	200	212.5	237.5	250	262.5	275	300	312.5	325	350
L5	12	16.5	14.5	13	17.5	15.5	14	12	16.5	15	13	17.5

n: Stations	14	15	16	17	18	19	20	21	22	23	24
L1	341.3	357.3	373.3	389.3	405.3	421.3	437.3	453.3	469.3	485.3	501.3
L2	272	288	304	320	336	352	368	384	400	416	432
L3	373	385.5	398	423	435.5	448	460.5	485.5	498	510.5	535.5
L4	362.5	375	387.5	412.5	425	437.5	450	475	487.5	500	525
L5	16	14	12.5	17	15	13.5	11.5	16	14.5	12.5	17

Plug-in Connector Connecting Base | Type 10/Side Ported | EX180

Dimensions: SY7000 Series

SS5Y7-10S8□□□-Stations U/D/B - C6, N7 / C8, N9 / C10, N11 / C12 (D)

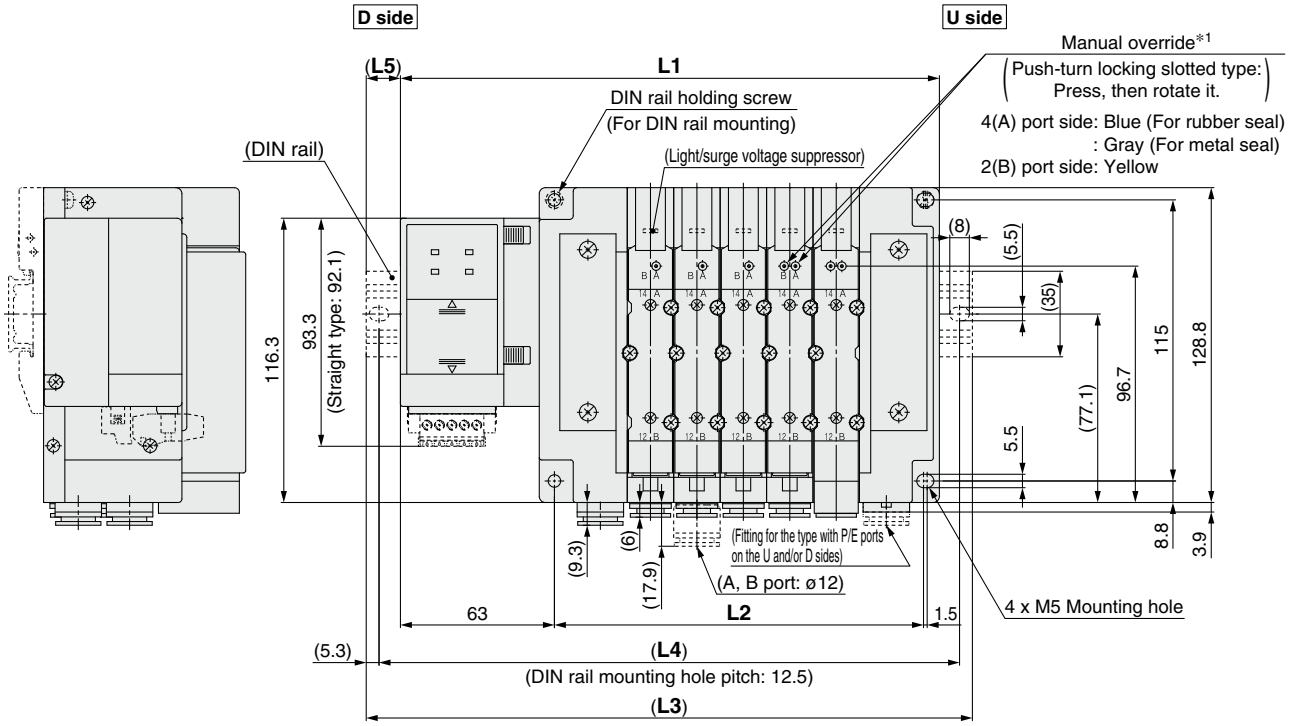

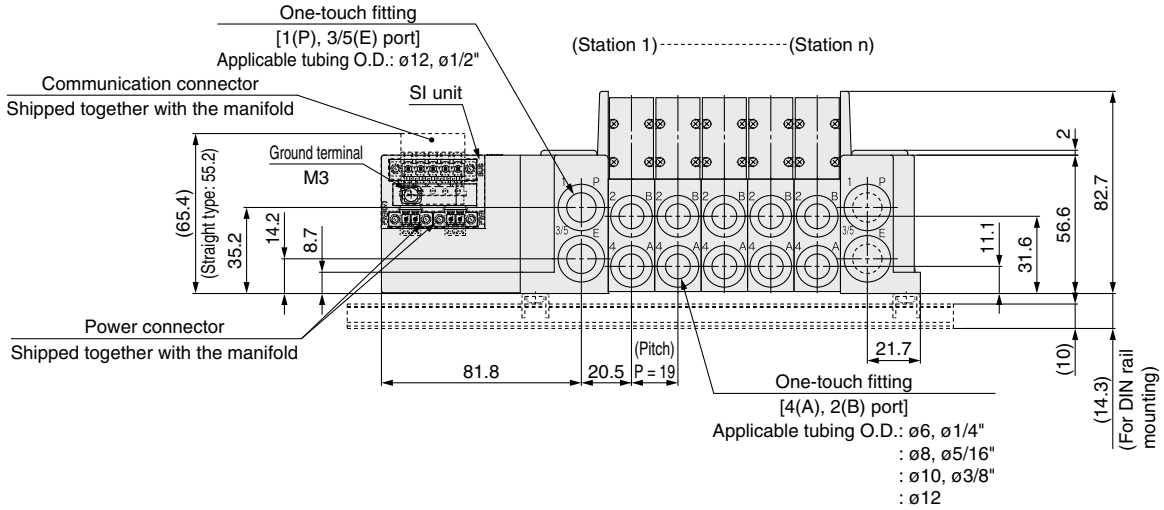

*1 Refer to page 159 for dimensions of the external pilot, silencer, elbow fittings, and slide locking manual override.
* These figures show the "SS5Y7-10S8V2-05D-C10."
* Refer to page 164 for dimensions of A or B port top-ported type.

n: Stations	2	3	4	5	6	7	8	9	10	11	12	13
L1	163.5	182.5	201.5	220.5	239.5	258.5	277.5	296.5	315.5	334.5	353.5	372.5
L2	94	113	132	151	170	189	208	227	246	265	284	303
L3	198	210.5	235.5	248	273	285.5	310.5	323	348	360.5	385.5	398
L4	187.5	200	225	237.5	262.5	275	300	312.5	337.5	350	375	387.5
L5	17.5	14	17	14	17	13.5	16.5	13.5	16.5	13	16	13

n: Stations	14	15	16	17	18	19	20	21	22	23	24
L1	391.5	410.5	429.5	448.5	467.5	486.5	505.5	524.5	543.5	562.5	581.5
L2	322	341	360	379	398	417	436	455	474	493	512
L3	423	435.5	460.5	473	498	510.5	535.5	548	573	598	610.5
L4	412.5	425	450	462.5	487.5	500	525	537.5	562.5	587.5	600
L5	16	12.5	15.5	12.5	15.5	12	15	12	15	18	14.5

Plug-in Connector Connecting Base

EX180

Type 12
Top Ported

SY3000/5000/7000 Series

How to Order Manifolds

SS5Y 3 – 12S8 Q □ □ – 05 U – □ □

❶ ❷ ❸ ❹ ❺ ❻ ❼ ❽

Refer to pages 162 to 164 for the dimensions of Type 12/Top-ported type.

❶ Series

3	SY3000
5	SY5000
7	SY7000

❷ SI unit

0	Without SI unit
Q	DeviceNet®
V	CC-Link

∗ Only the connector block assembly is mounted for models without an SI unit.

❸ SI unit output polarity, Number of outputs

	32 outputs	16 outputs
Without SI unit	**Nil**	
Positive common (NPN)	**2**	**3**
Negative common (PNP)	**4**	**5**

∗ When "V" (CC-Link) is selected for the SI unit, only symbol "2" or "4" (32 outputs) can be selected.
∗ Ensure a match with the common specification of the valves to be used.

❹ Communication connector

Nil	T-branch type
A	Straight type

∗ The communication connector and power connector are shipped together with the manifold. The power connector is only available for the straight type.
∗ When not selecting an SI unit, the symbol will be "nil."

❺ Valve stations

In the case of the 32-output SI unit

Symbol	Stations	Note
02	2 stations	Double wiring∗1
⋮	⋮	
16	16 stations	
02	2 stations	Specified layout∗2 (Up to 32 solenoids available)
⋮	⋮	
24	24 stations	

In the case of the 16-output SI unit

Symbol	Stations	Note
02	2 stations	Double wiring∗1
⋮	⋮	
08	8 stations	
02	2 stations	Specified layout∗2 (Up to 16 solenoids available)
⋮	⋮	
16	16 stations	

∗1 Double wiring: 2-position single, double, 3-position, and 4-position valves can be used on all manifold stations.
Use of a 2-position single solenoid will result in an unused control signal. If this is not desired, order with a specified layout.
∗2 Specified layout: Indicate the wiring specifications on the manifold specification sheet. (Note that 2-position double, 3-position, and 4-position valves cannot be used where single wiring has been specified.)
∗ This also includes the number of the blanking plate assembly.
∗ For the product without the SI unit (S80), note the maximum number of solenoids of the SI unit that will be mounted. If the layout is specified, indicate it on the manifold specification sheet.

❻ P, E port entry, SUP/EXH block assembly

P, E port entry	Internal pilot	Internal pilot, Built-in silencer	External pilot
U side (2 to 10 stations)	**U**	**C**∗1	**G**
D side (2 to 10 stations)	**D**	**E**∗1	**H**
Both sides (2 to 24 stations)	**B**	—	**J**

∗1 For SUP/EXH block assembly specifications, built-in silencer types will have P port entry stipulated.
∗ For built-in silencer type, P and E ports are available on U and D sides. 3/5(E) port is plugged. The silencer exhaust port is located on the opposite side of P, E port entry. (Example: When the P, E port entry is D side, the silencer exhaust port is U side.)
∗ When the built-in silencer type is used, keep the exhaust port from coming in direct contact with water or other liquids.

❼ P, E port size (One-touch fittings)

Symbol	SY3000	SY5000	SY7000
Nil	ø8	ø10	ø12
N	ø5/16"	ø3/8"	ø1/2"

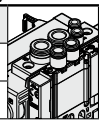

∗ For N, sizes are in inches.

❽ Mounting

Nil	Direct mounting	
D	DIN rail mounting (With DIN rail)	
D0	DIN rail mounting (Without DIN rail)	
D3	For 3 stations	Specify a longer rail than the standard length.
⋮	⋮	
D24	For 24 stations	

∗ Refer to page 295 for the fixation of DIN rail mounting type manifold.

How to Order Manifold Assembly

Example (SS5Y3-12S8□-□)

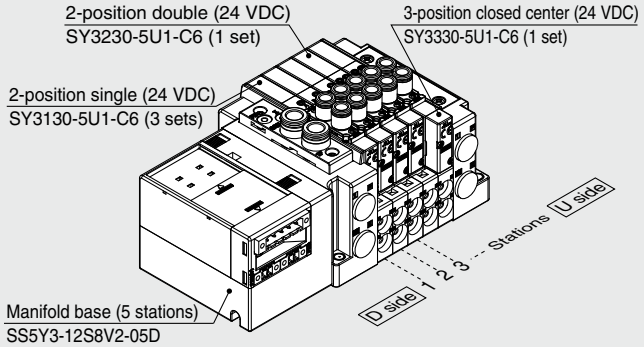

SS5Y3-12S8V2-05D ···· 1 set (Type 10 5-station manifold base part no.)
∗SY3130-5U1-C6 ····· 3 sets (2-position single part no.)
∗SY3230-5U1-C6 ····· 1 set (2-position double part no.)
∗SY3330-5U1-C6 ····· 1 set (3-position closed center part no.)
The asterisk denotes the symbol for the assembly. Prefix it to the part numbers of the valve, etc.

- For the valve arrangement, the valve closest to the D side is considered the 1st station.
- Under the manifold part number, state the valves to be mounted in order starting with the 1st station as shown in the figure above. If the arrangement becomes too complicated, specify the details on a manifold specification sheet.

For details on the EX180 Integrated Type (For Output) Serial Transmission System, refer to the **Web Catalog** and the Operation Manual. For the part numbers of the SI units to be mounted, refer to page 196-1. Please download the Operation Manual via the SMC website: https://www.smcworld.com

How to Order Valves (With mounting screw)

Refer to page 15 for valve specifications.

SY 3 1 3 0 □ □ □ □ – 5 □ □ 1 – C6 □ – □

❶ ❷ ❸ ❹ ❺ ❻ ❼ ❽ ❾ ❿ ⓫ ⓬ ⓭

● Top ported

❶ Series

3	SY3000
5	SY5000
7	SY7000

❷ Type of actuation

1	2-position	Single
2		Double
3	3-position	Closed center
4		Exhaust center
5		Pressure center
A*1	4-position dual 3-port	N.C./N.C.
B*1		N.O./N.O.
C*1		N.C./N.O.

*1 Only the rubber seal type is available for the 4-position dual 3-port valve.

❸ Seal type

0	Rubber seal
1	Metal seal

❹ Pilot type

Nil	Internal pilot
R	External pilot

❺ Back pressure check valve (Built-in valve type)

Nil	None
H	Built-in

* Only the rubber seal type is available. A manifold installed type is available if a back pressure check valve with a metal seal is required. Refer to page 212 for ordering examples. However, it is not recommended to use the built-in valve type and the manifold installed type at the same time because it will reduce the flow.
* The built-in valve type back pressure check valve is not available for the 3-position type or the SY7000.

❻ Pilot valve option

Nil	Standard (0.7 MPa)
B	Quick response type (0.7 MPa)
K*1	High-pressure type (1.0 MPa)

*1 Only the metal seal type is available for the high-pressure type.

❼ Coil type

Nil	Standard
T	With power-saving circuit (Continuous duty type)

* Be sure to select the power-saving circuit type when the valve is to be continuously energized for long periods of time.
* Be careful of the energizing time when the power-saving circuit is selected. Refer to page 292 for details.

❽ Rated voltage

5	24 VDC

❾ Light/surge voltage suppressor and common specification

Symbol	With light	Surge voltage suppressor	Common specification
R	—	●	Non-polar
U	●		
S	—		Positive common
Z	●		
NS	—		Negative common
NZ	●		

* Select “R,” “U,” “S,” or “Z” for the valve when the SI unit output polarity is positive common. Select “R,” “U,” “NS,” or “NZ” for the valve when the SI unit output polarity is negative common.
* Only “Z” and “NZ” are available with a power-saving circuit.

❿ Manual override

Nil: Non-locking push type

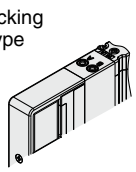

D: Push-turn locking slotted type

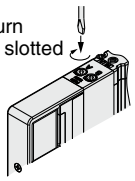

E: Push-turn locking lever type

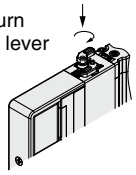

F: Slide locking type

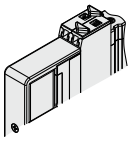

* Refer to page 34 for the safety slide locking manual override.

⓫ A, B port size

Thread piping

Symbol	Port size	Applicable series
M5	M5 x 0.8	SY3000
01	1/8	SY5000
02	1/4	SY7000

One-touch fitting (Metric)

Symbol	A, B port	SY3000	SY5000	SY7000
C2	ø2	●	—	—
C3	ø3.2	●	—	—
C4	ø4	●	●	—
C6	ø6	●	●	●
C8	ø8	—	●	●
C10	ø10	—	—	●
C12	ø12	—	—	●

One-touch fitting (Inch)

Symbol	A, B port	SY3000	SY5000	SY7000
N1	ø1/8"	●	—	—
N3	ø5/32"	●	●	—
N7	ø1/4"	●	●	●
N9	ø5/16"	—	●	●
N11	ø3/8"	—	—	●

⓬ Thread type

Nil	Rc
F	G
N	NPT
T	NPTF

* Only Nil is available for M5.

⓭ Type of mounting screw

Nil	Round head combination screw
B	Hexagon socket head cap screw
K	Round head combination screw (Drop prevention type)
H	Hexagon socket head cap screw (Drop prevention type)

* For “K” and “H,” the valve body cover has a drop prevention construction to stop the mounting screws from falling out when the valve is removed for maintenance, etc.
* **When ordering a valve individually, the base gasket is not included.**
  Since the base gasket is attached to the manifold, please order the base gasket separately if it is needed for maintenance. Refer to page 367 for base gasket and mounting screw part numbers.
* “B” and “H” cannot be selected for the individual SUP/EXH spacer assembly or interface regulator.

⚠ Protective class class Ⅲ (Mark: ⧫)

SY3000/5000/7000 Series
Common Dimensions

SY3000 Series | **Plug-in Connector Connecting Base** | **Type 10/Side Ported** | **External Pilot, Silencer, Elbow Fittings, Slide Locking Manual Override**

SS5Y3-10□-Stations U/D/B (S, R)-L/B□

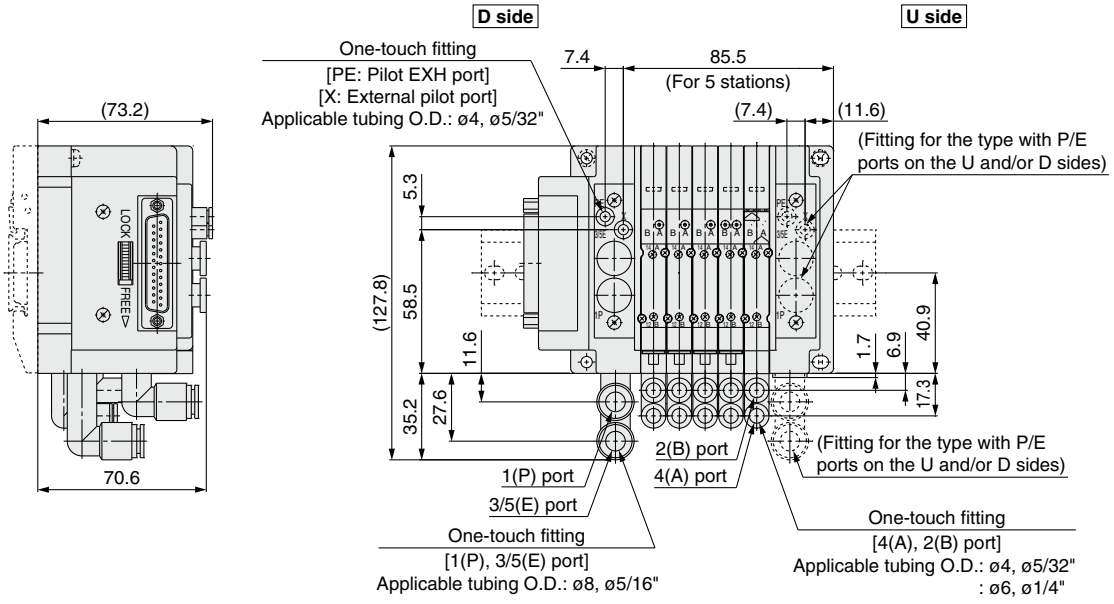

External pilot for straight piping

P, E port entry: D

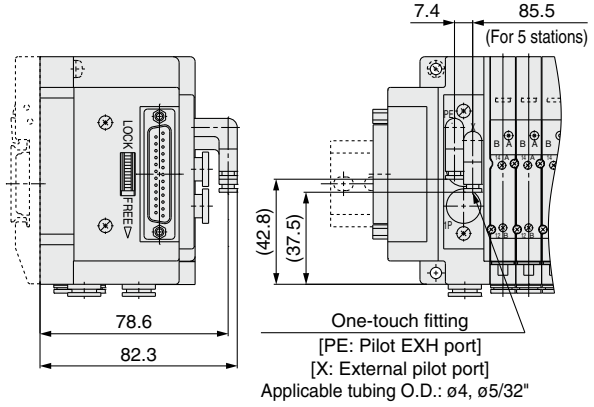

(Station 1)---(Station n)

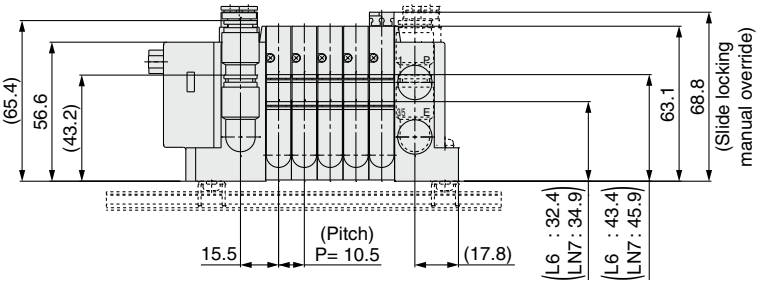

∗ These figures show the "SS5Y3-10F2-05DR-L6."

Built-in silencer

<Internal pilot>

P, E port entry: D

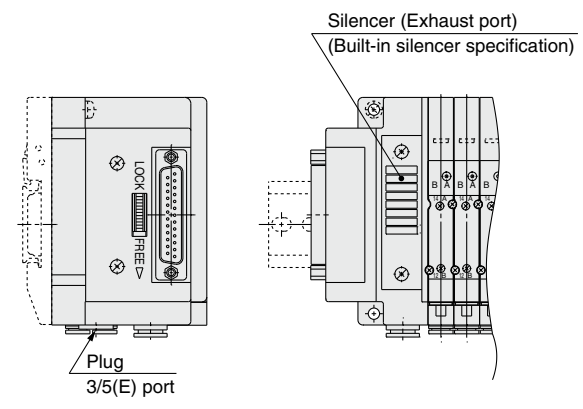

Downward (Type B)

[P, E port entry]

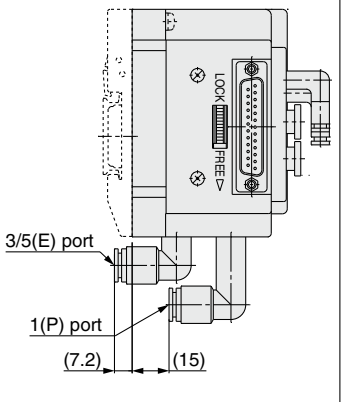

[A, B port entry]

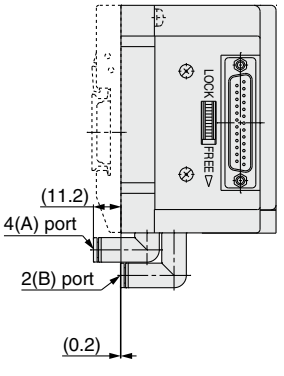

SMC

SY5000 Series

Plug-in Connector Connecting Base

Type 10/Side Ported

External Pilot, Silencer, Elbow Fittings, Slide Locking Manual Override

SS5Y5-10□-Stations $\frac{U}{D}_{B}$(S, R)-$\frac{L}{B}$□

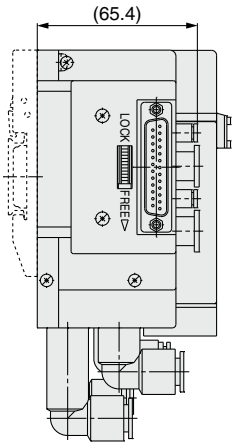

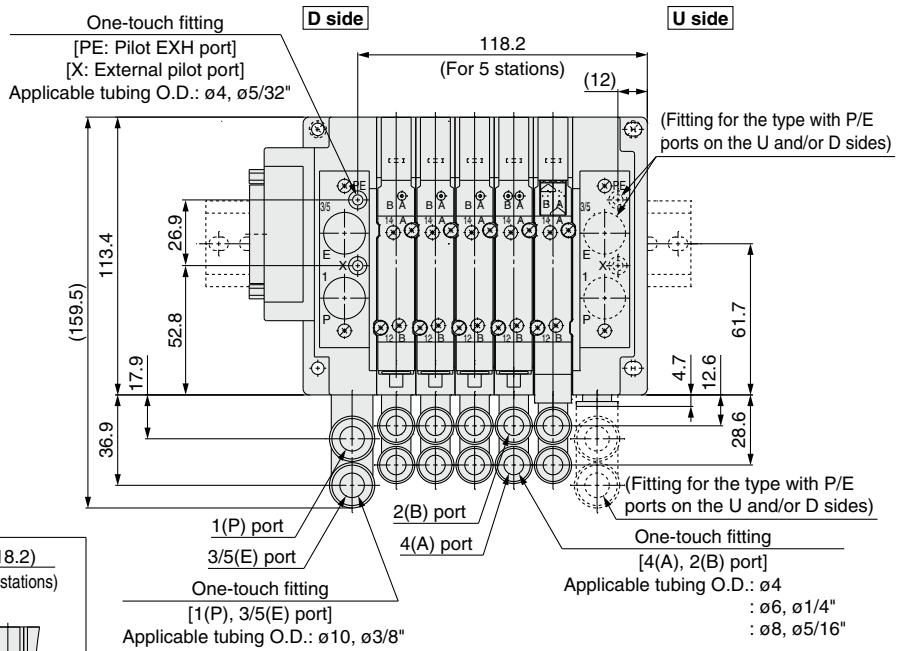

External pilot for straight piping

P, E port entry: D

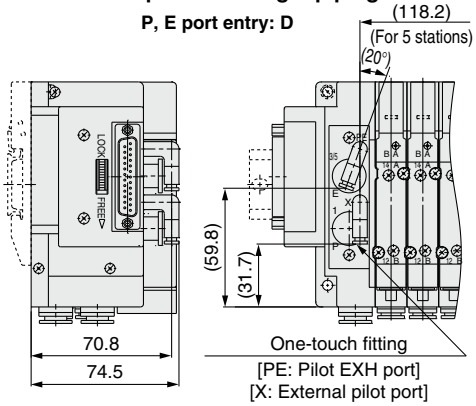

Built-in silencer

P, E port entry: D

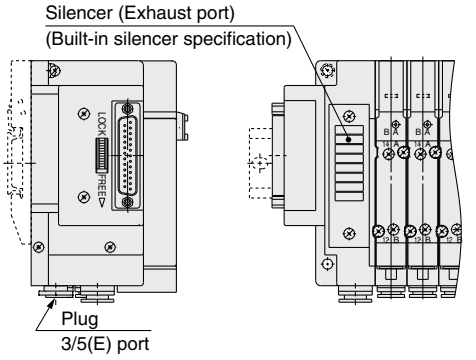

Downward (Type B)

[P, E port entry] **[A, B port entry]**

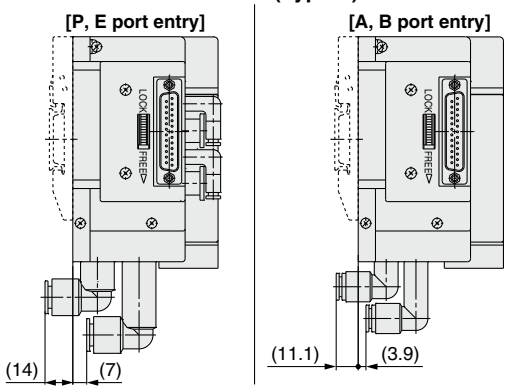

(Station 1)----------(Station n)

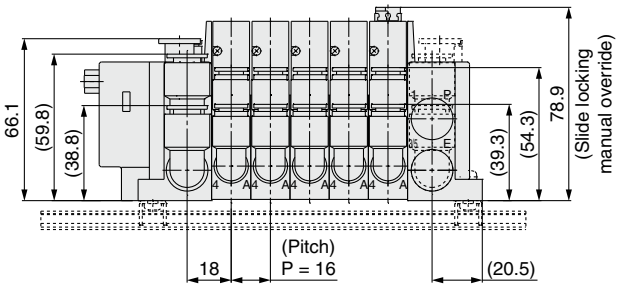

* These figures show the "SS5Y5-10F2-05DR-L8."

Valve/SY3000 Series (Mixed Mounting)

Downward (Type B) **Upward (Type L)**

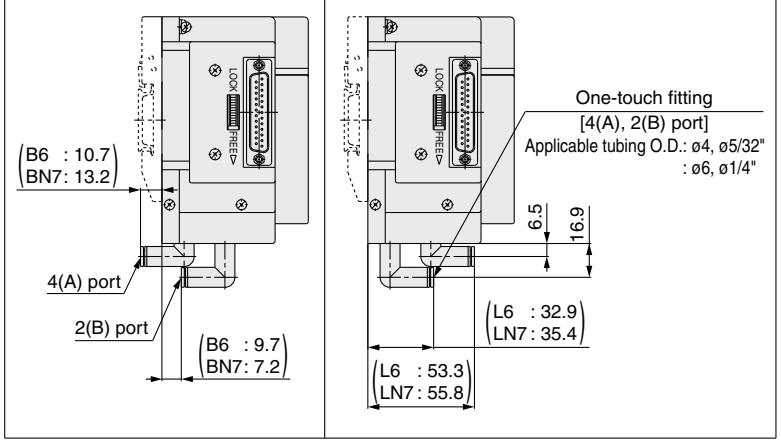

SY7000 Series

Plug-in Connector Connecting Base

Type 10/Side Ported

External Pilot, Silencer, Elbow Fittings, Slide Locking Manual Override

SS5Y7-10□-Stations $\frac{U}{D}$(S, R)-$\frac{L}{B}$□

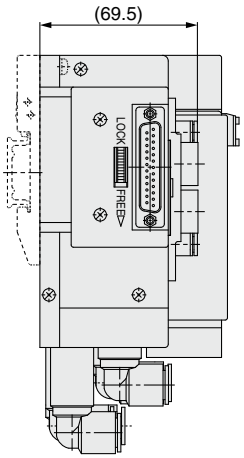

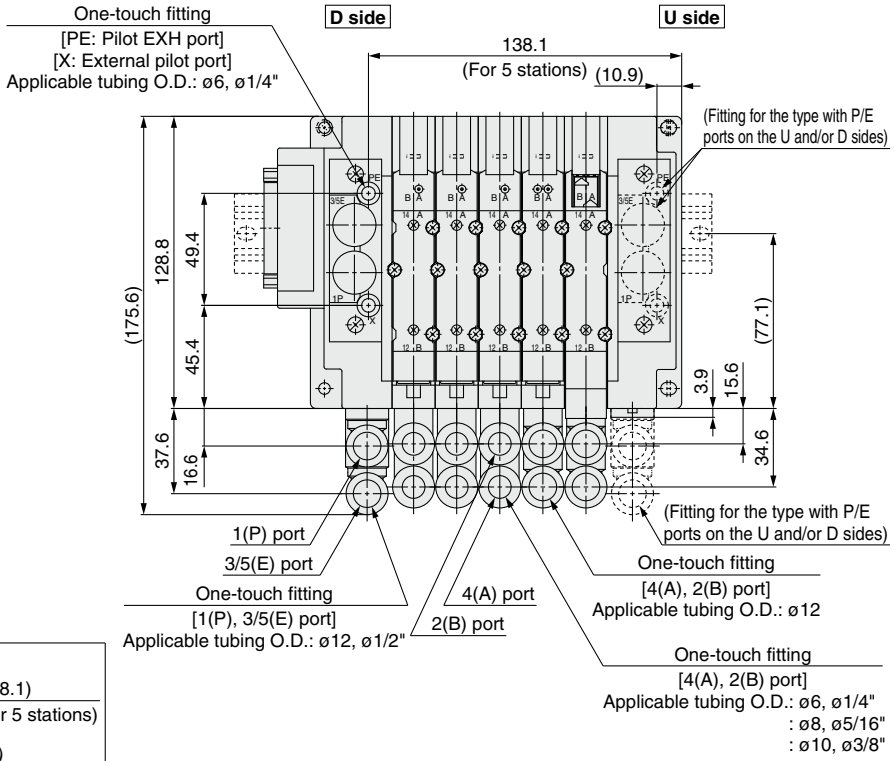

External pilot for straight piping
P, E port entry: D

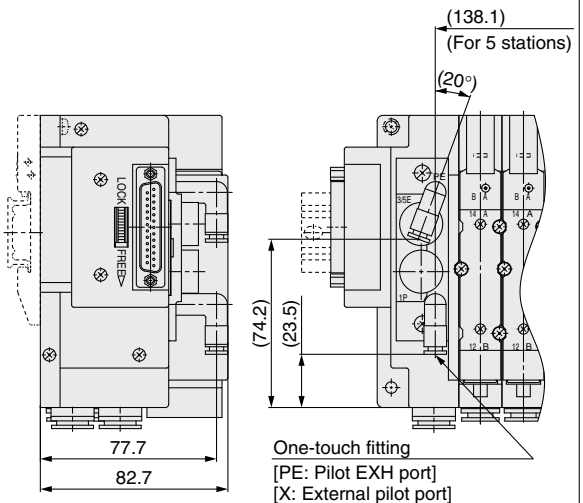

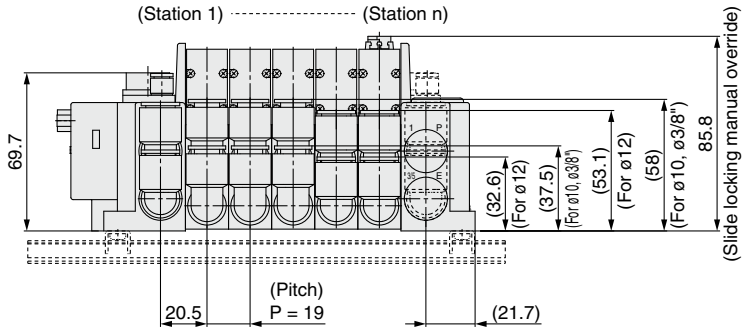

∗ These figures show the "SS5Y7-10F2-05DR-LM."

Built-in silencer
P, E port entry: D

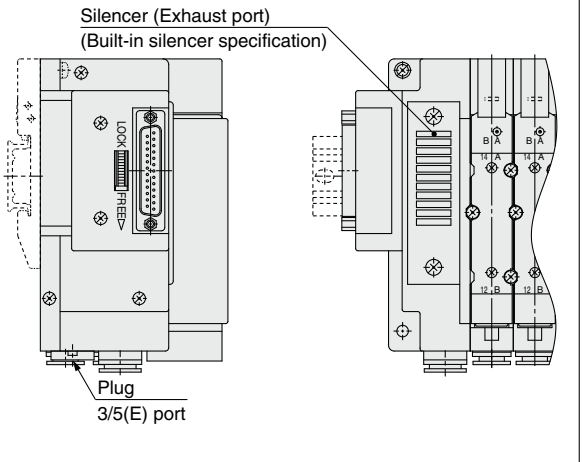

Downward (Type B)

[P, E port entry]

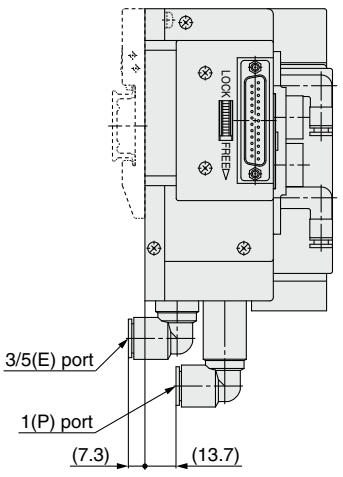

[A, B port entry]

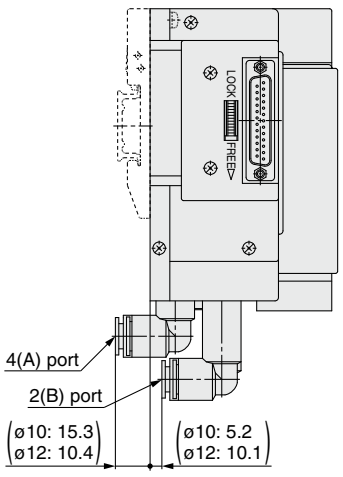

SY5000 Series

Plug-in Connector Connecting Base | **Type 11/Bottom Ported** | **All Wirings**

SS5Y5-11□-Stations U D B

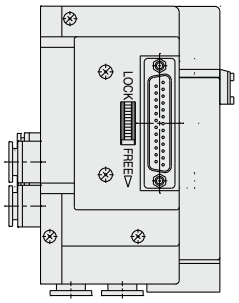

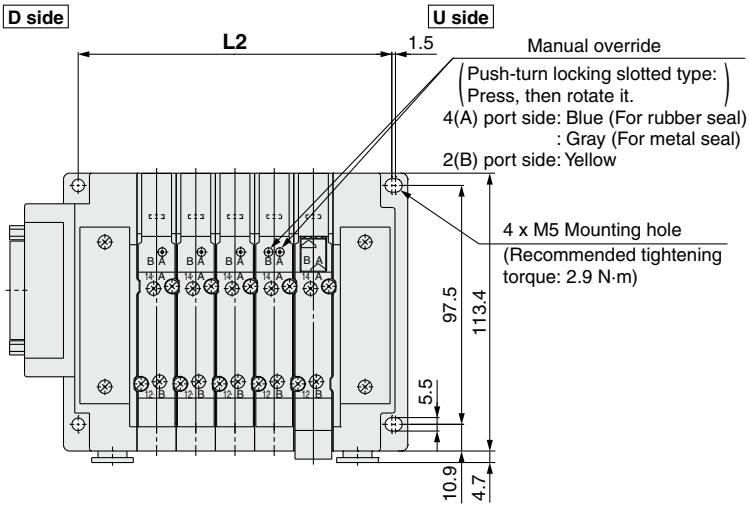

External pilot

P, E port entry: D

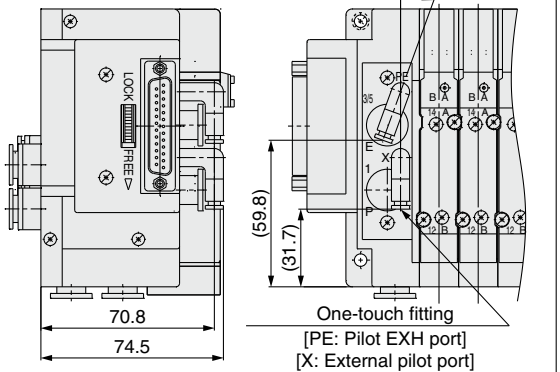

Built-in silencer

P, E port entry: D

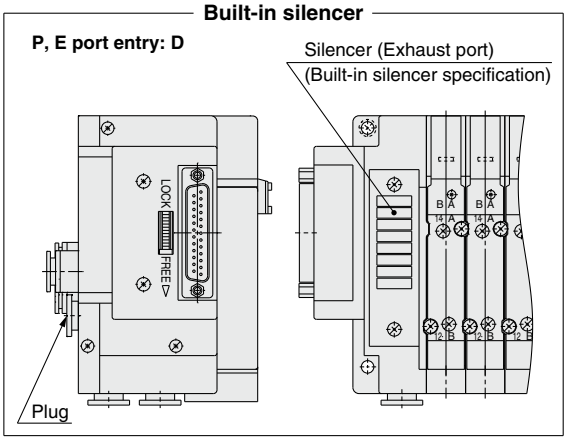

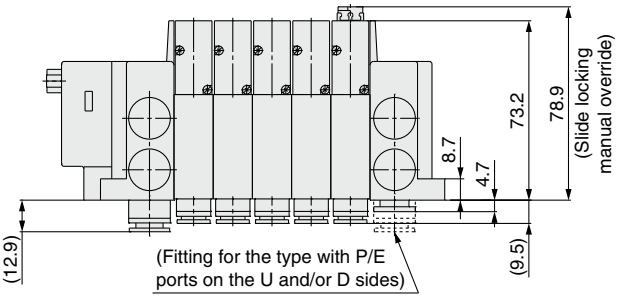

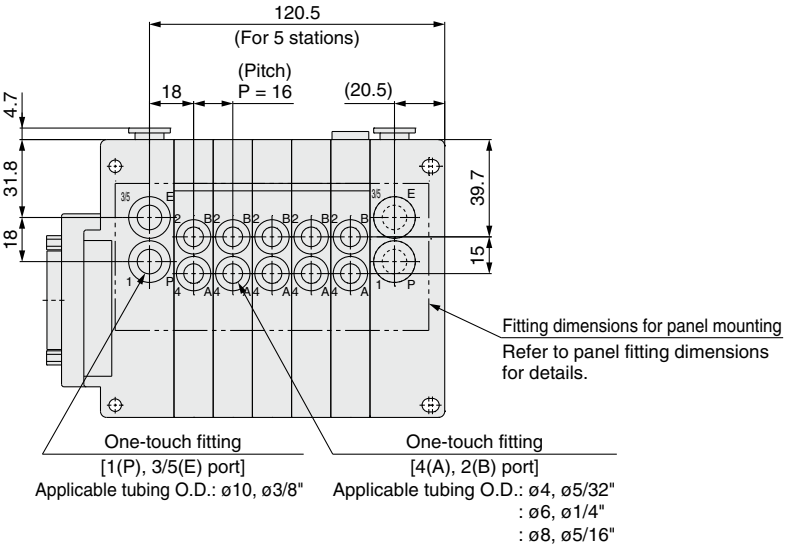

Panel fitting dimensions

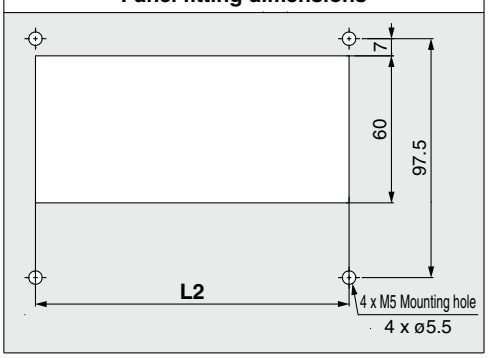

* These figures show the "SS5Y5-11F2-05D-C8."
* Refer to the pages below for L2 dimensions and other dimensions that are not specified in each wiring specification.

D-sub connector <IP40>	: p. 45
D-sub connector <IP67>	: p. 48
Flat ribbon cable	: p. 51
Terminal block box (Spring type)	: p. 62
Terminal block box	: p. 71
Lead wire	: p. 81
Circular connector	: p. 91
EX500 (128 points)	: p. 101
EX500 (64 points)	: p. 107
EX600	: pp. 118, 119
EX250	: p. 129
EX260	: p. 137
EX126	: p. 145
EX120	: p. 153

SY7000 Series

Plug-in Connector Connecting Base | **Type 11/Bottom Ported** | **All Wirings**

SS5Y7-11□-Stations U D B

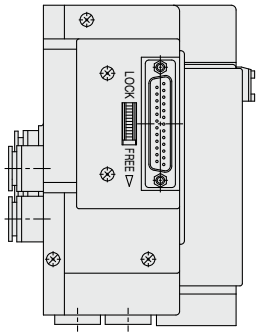

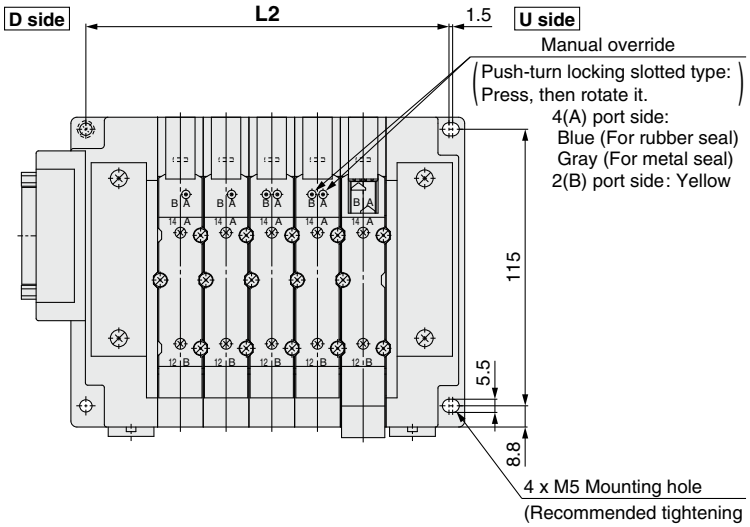

External pilot

P, E port entry: D

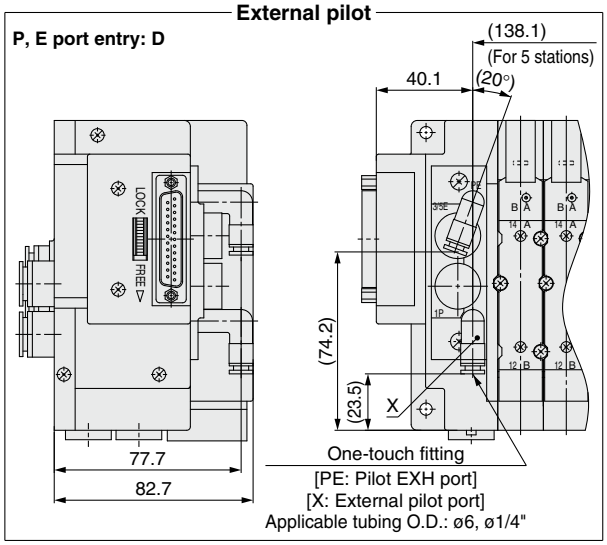

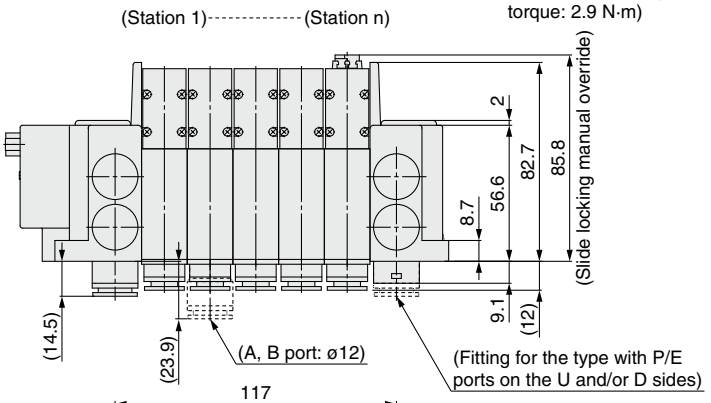

Built-in silencer

P, E port entry: D

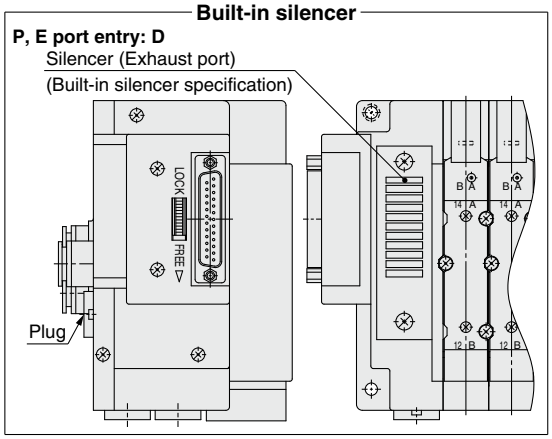

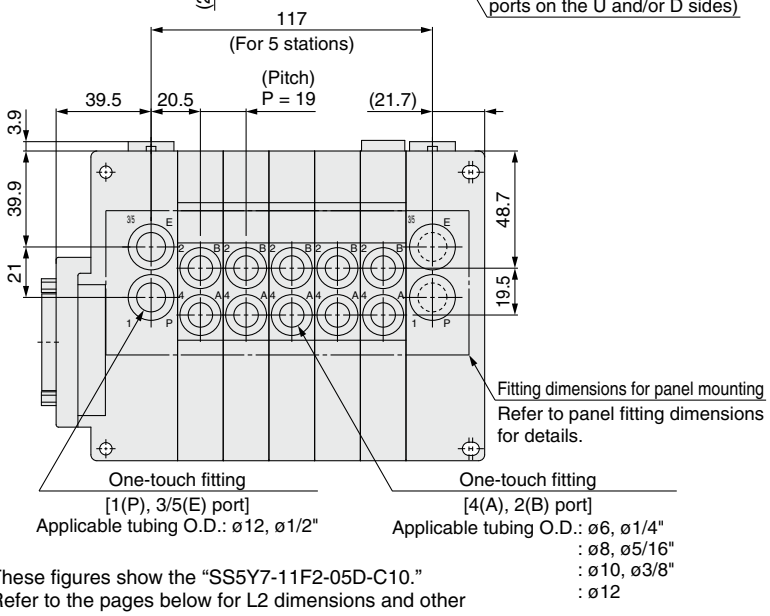

Panel fitting dimensions

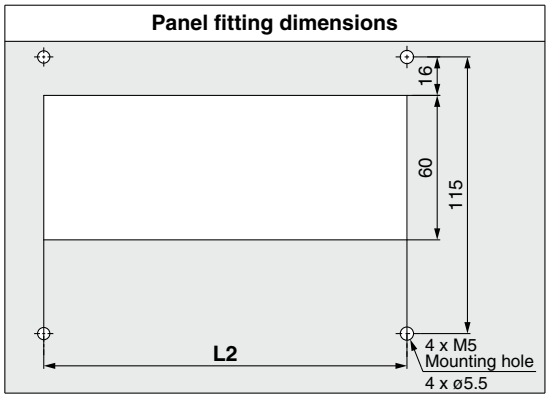

* These figures show the "SS5Y7-11F2-05D-C10."
* Refer to the pages below for L2 dimensions and other dimensions that are not specified in each wiring specification.

D-sub connector <IP40>	: p. 46
D-sub connector <IP67>	: p. 49
Flat ribbon cable	: p. 52
Terminal block box (Spring type)	: p. 63
Terminal block box	: p. 72
Lead wire	: p. 82
Circular connector	: p. 92
EX500 (128 points)	: p. 102
EX500 (64 points)	: p. 108
EX600	: pp. 120, 121
EX250	: p. 130
EX260	: p. 138
EX126	: p. 146
EX120	: p. 154

SMC

SY3000 Series

Plug-in Connector Connecting Base | Type 12/Top Ported | All Wirings

SS5Y3-12□-Stations U/D/B (R)

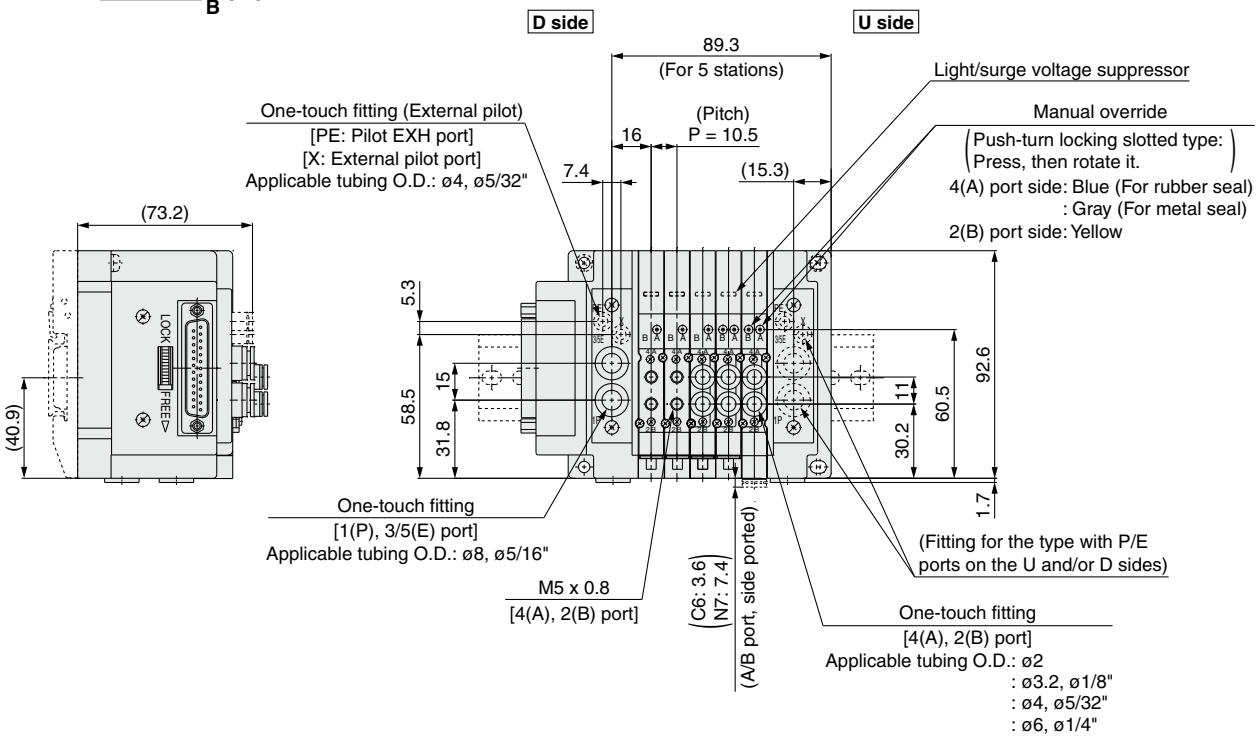

(Station 1)---(Station n)

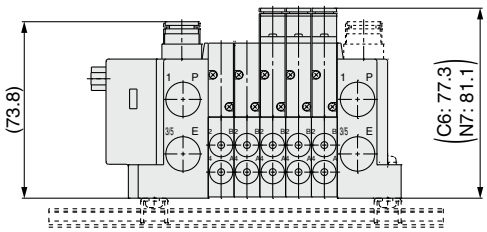

* These figures show the “SS5Y3-12F2-05D.”
* For the built-in silencer type, a silencer is mounted on the opposite side of U or D side with P or E port. Refer to page 157 for dimensions of the silencer.
* Refer to the pages below for dimensions that are not specified in each wiring specification.

D-sub connector <IP40>	: p. 44
D-sub connector <IP67>	: p. 47
Flat ribbon cable	: p. 50
Terminal block box (Spring type)	: p. 61
Terminal block box	: p. 70
Lead wire	: p. 80
Circular connector	: p. 90
EX500 (128 points)	: p. 100
EX500 (64 points)	: p. 106
EX600	: pp. 116, 117
EX250	: p. 128
EX260	: p. 136
EX126	: p. 144
EX120	: p. 152

SY5000 Series

Plug-in Connector Connecting Base | **Type 12/Top Ported** | **All Wirings**

SS5Y5-12□-[Stations][U/D/B](R)

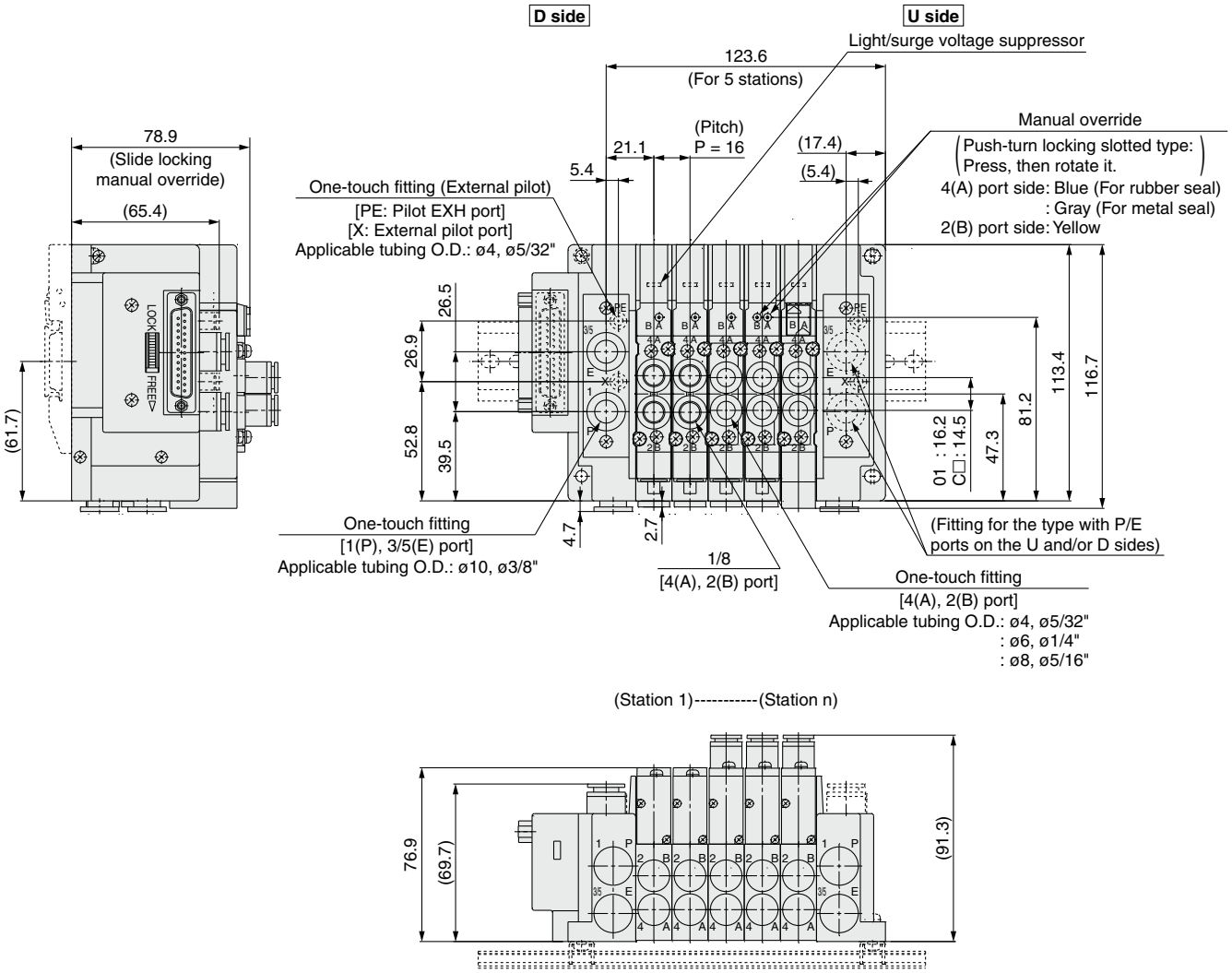

* These figures show the "SS5Y5-12F2-05D."
* For the built-in silencer type, a silencer is mounted on the opposite side of U or D side with P or E port. Refer to page 158 for dimensions of the silencer.
* Refer to the pages below for dimensions that are not specified in each wiring specification.

D-sub connector <IP40>	: p. 45
D-sub connector <IP67>	: p. 48
Flat ribbon cable	: p. 51
Terminal block box (Spring type)	: p. 62
Terminal block box	: p. 71
Lead wire	: p. 81
Circular connector	: p. 91
EX500 (128 points)	: p. 101
EX500 (64 points)	: p. 107
EX600	: pp. 118, 119
EX250	: p. 129
EX260	: p. 137
EX126	: p. 145
EX120	: p. 153

SY7000 Series

Plug-in Connector Connecting Base | **Type 12/Top Ported** | **All Wirings**

SS5Y7-12□-Stations U/D/B (R)

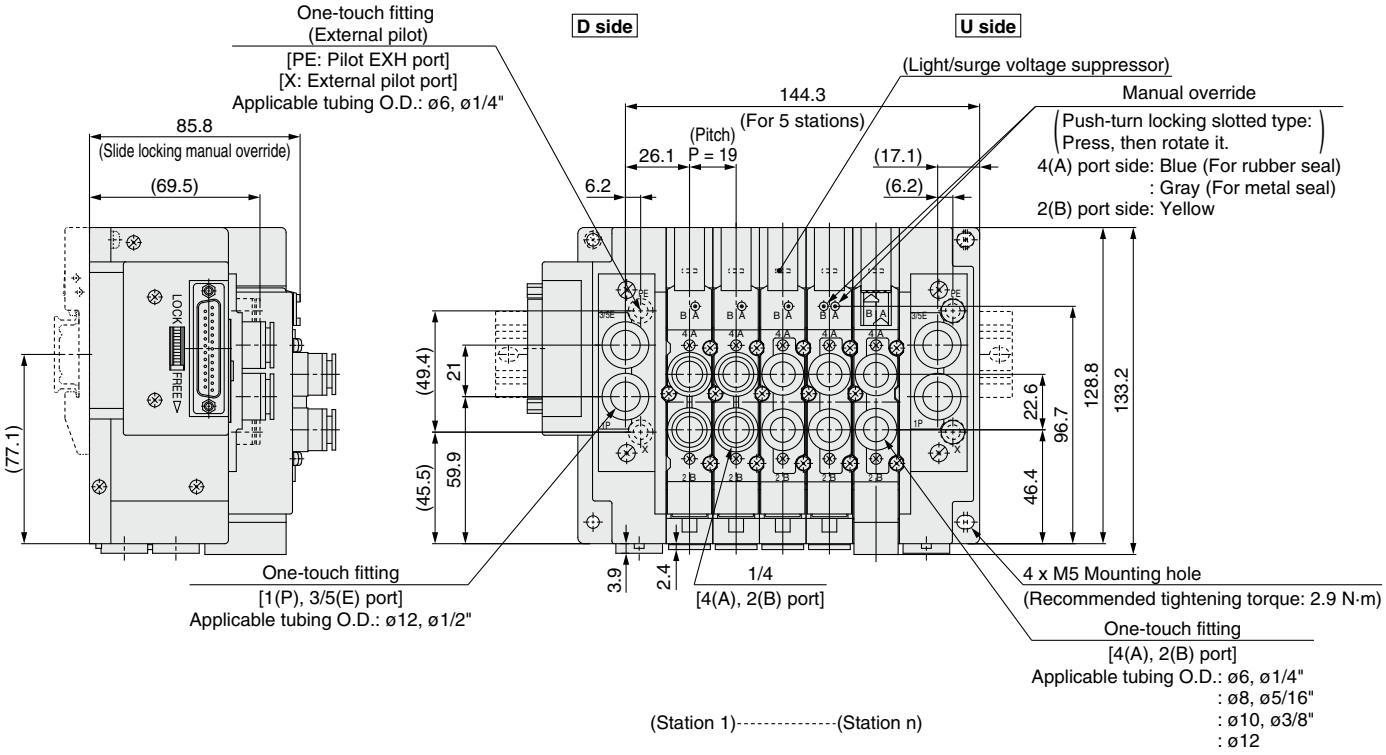

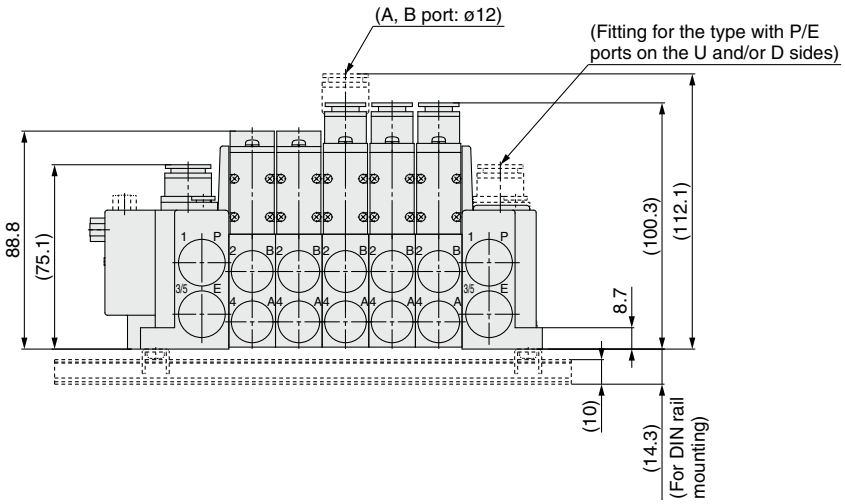

* These figures show the "SS5Y7-12F2-05D."
* For the built-in silencer type, a silencer is mounted on the opposite side of U or D side with P or E port.
  Refer to page 159 for dimensions of the silencer.
* Refer to the pages below for dimensions that are not specified in each wiring specification.

D-sub connector <IP40>	: p. 46
D-sub connector <IP67>	: p. 49
Flat ribbon cable	: p. 52
Terminal block box (Spring type)	: p. 63
Terminal block box	: p. 72
Lead wire	: p. 82
Circular connector	: p. 92
EX500 (128 points)	: p. 102
EX500 (64 points)	: p. 108
EX600	: pp. 120, 121
EX250	: p. 130
EX260	: p. 138
EX126	: p. 146
EX120	: p. 154

Type 10
Side Ported

Type 11
Bottom Ported

Plug-in Connector Connecting Base: Plug-in Mixed Mounting Type Manifold

D-sub Connector (IP40/67) | Flat Ribbon Cable | Terminal Block Box/Spring Type (IP67) | Terminal Block Box (IP67) | Lead Wire (IP67) | Circular Connector (IP67) | EX500 (IP67) | EX600 (IP67) | EX245 (IP65) | EX250 (IP67) | EX260 (IP67) | EX126 (IP67) | EX120 | EX180

SY3000/5000 Series

CE UKCA cULus

∗ Refer to the connector type.

The SY3000 can be mounted onto the SY5000 size manifold.

How to Order Manifolds

Refer to page 174 for the dimensions of Type 11/ Bottom-ported type.

SS5Y5 − M 10 F 1 − 05 U □ − C 8 6 □

❶ ❷ ❸ ❹ ❺ ❻ ❼ ❽ ❾ ❿

Mixed Mounting Type

It is possible to mount the SY3000 size valves on all stations. In this case, there is no need to fill in part ❽ in the order code. However, the manifold block width should be 12.5 mm.

❶ Type

10	Side ported
11	Bottom ported

❷ Connector type

Symbol	Type		Page
F	D-sub connector (25 pins)	IP40	41
FW		IP67	
P	Flat ribbon cable	26 pins	
PG		20 pins	
PH		10 pins	
TC	Terminal block box (Spring type)		59
T	Terminal block box		67
L1	Lead wire	34 cores	77
L2		17 cores	
L3		9 cores	
M	Circular connector		87
S□	Serial transmission	EX500 Gateway Decentralized System 2 (128 points)	97
S□		EX500 Gateway Decentralized System (64 points)	103
S6□		EX600	113
SA□		EX245	124-1
S□		EX250	125
S□		EX260	133
S4□∗1		EX126	141
S3□∗1		EX120	149
S8□		EX180	156-1

∗1 EX126, EX120 are not yet UL-compliant.
∗ Refer to the pages shown in the table above for details.

❸

• With Lead wire

Lead wire length

1	0.6 m
2	1.5 m
3	3 m

• With D-sub connector (IP40/67) and Flat ribbon cable

Connector entry direction

1	Upward
2	Lateral

∗ It is not necessary to select the items above for the valve with terminal block box or with circular connector or the serial transmission type.

❹ Valve stations

Symbol	Stations	Note
02	2 stations	Some connectors have a limitation on the number of stations. Refer to the pages shown in the table "Connector type" for details.
⋮	⋮	
24	24 stations	

❺ P, E port entry

U	U side (2 to 10 stations)
D	D side (2 to 10 stations)
B	Both sides (2 to 24 stations)

∗ Refer to ❼ on page 113 for the EX600, page 125 for the EX250, and page 156-1 for the EX180.

❻ SUP/EXH block assembly

Nil	Internal pilot
S	Internal pilot, Built-in silencer
R	External pilot

∗ 3/5(E) port is plugged for the built-in silencer type.
∗ Refer to ❼ on page 113 for the EX600, page 125 for the EX250, and page 156-1 for the EX180.

❼ Fitting type: One-touch fitting

Symbol	A, B port		
C	Metric size	Straight	
L		Elbow	Upward∗2
B			Downward∗2
N	Inch size	Straight	
LN		Elbow	Upward∗2
BN			Downward∗2
CM∗1	Mixed sizes	Straight	
LM∗1		Elbow (Including upward and downward piping)∗2	

∗1 Select CM or LM if mixed port sizes are to be used for each series. (For example, if mixed sizes, such as C6 and C8, are to be used for the SY5000 series) In such cases, indicate the sizes on the manifold specification sheet.
The direction of P, E port fittings is the same as for the A, B port. If selecting "LM," indicate it on the manifold specification sheet for the P, E port fitting direction.
∗2 To avoid interference with the body or piping, select a downward elbow port when mounting the optional spacer assembly (pages 204 to 206). Elbow fittings are not available for Type 11 (Bottom ported).
∗ Elbow fittings: ø2, ø3.2, and ø1.8" are not available for the SY3000 series. ø2, ø3.2, ø1.8", and ø5/32" are not available for the SY5000 series.

❽ SY5000: A, B port size

(Metric/One-touch fitting)

Symbol	Port size
4	ø4
6	ø6
8	ø8
Nil	For all stations of SY3000

(Inch/One-touch fitting)

Symbol	Port size
3	ø5/32"
7	ø1/4"
9	ø5/16"
Nil	For all stations of SY3000

∗ No symbol needs to be specified when fitting type “CM” or “LM” is selected.

❾ SY3000: A, B port size

(Metric/One-touch fitting)

Symbol	Port size
2	ø2
3	ø3.2
4	ø4
6	ø6
8	ø8∗1

(Inch/One-touch fitting)

Symbol	Port size
1	ø1/8"
3	ø5/32"
7	ø1/4"
9	ø5/16"∗1

∗1 The valve pitch is the same as that of the SY5000.
∗ No symbol needs to be specified when fitting type “CM” or “LM” is selected.

❿ Mounting

Nil	Direct mounting	
D	DIN rail mounting (With DIN rail)	
D0	DIN rail mounting (Without DIN rail)	
D3	For 3 stations	Specify a length longer than that of the standard rail. [The SY5000 valve is now at a mountable length (manifold block length of 16 mm).]
⋮	⋮	
D24	For 24 stations	

∗ Only direct mounting is available for the type 11 bottom-ported type.
∗ Refer to page 172 to determine the L3 using “Calculation formula” for the DIN rail length.
∗ Refer to page 295 for the fixation of DIN rail mounting type manifold.

How to Order Manifold Assembly

Example (SS5Y5-M10F1-□)

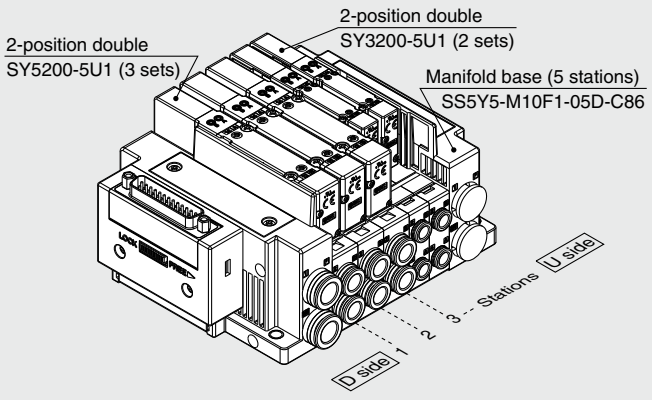

SS5Y5-M10F1-05D-C86 ··· 1 set (Type M10 5-station manifold base part no.)
∗SY5200-5U1 ····· 3 sets (2-position double part no.)
∗SY3200-5U1 ····· 2 sets (2-position double part no.)
The asterisk denotes the symbol for the assembly. Prefix it to the part numbers of the valve, etc.

- For the valve arrangement, the valve closest to the D side is considered the 1st station.
- Under the manifold part number, state the valves to be mounted in order starting with the 1st station as shown in the figure above. If the arrangement becomes too complicated, specify the details on a manifold specification sheet.

∗ When mixing top-ported configurations, select from those listed on page 178. In such cases, use caution as there is also output on the A and B ports on the base side.
Specify on the manifold specification sheet if plugs are required for the A and B ports on the base side.

⚠ Protective class class Ⅲ (Mark: ⧫)

How to Order Valves (With mounting screw)

Refer to page 15 for valve specifications.

SY 3 1 0 0 □ □ □ □ – 5 □ □ 1 – □

❶ ❷ ❸ ❹ ❺ ❻ ❼ ❽ ❾ ❿ ⓫

❸ Base mounted

❶ Series

3	SY3000
5	SY5000

❷ Type of actuation

1	2-position	Single
2		Double
3	3-position	Closed center
4		Exhaust center
5		Pressure center
A*1	4-position dual 3-port	N.C./N.C.
B*1		N.O./N.O.
C*1		N.C./N.O.

*1 Only the rubber seal type is available for the 4-position dual 3-port valve.

❸ Seal type

0	Rubber seal
1	Metal seal

❹ Pilot type

Nil	Internal pilot
R	External pilot

❺ Back pressure check valve (Built-in valve type)

Nil	None
H	Built-in

* Only the rubber seal type is available. A manifold installed type is available if a back pressure check valve with a metal seal is required. Refer to page 212 for ordering examples. However, it is not recommended to use the built-in valve type and the manifold installed type at the same time because it will reduce the flow.
* The built-in valve type back pressure check valve is not available for the 3-position type.

❻ Pilot valve option

Nil	Standard (0.7 MPa)
B	Quick response type (0.7 MPa)
K*1	High pressure type (1.0 MPa)

*1 Only the metal seal type is available for the high pressure type.

❼ Coil type

Nil	Standard
T	With power saving circuit (Continuous duty type)

* Be sure to select the power saving circuit type if the valve is to be continuously energized for long periods of time.
* Be careful of the energizing time when the power saving circuit is selected. Refer to page 292 for details.

❽ Rated voltage

5	24 VDC
6	12 VDC

* Only 24 VDC is available for the serial transmission type.

❾ Light/surge voltage suppressor and common specification

Symbol	With light	Surge voltage suppressor	Common specification
Nil	—	—	Non-polar
R	—	●	
U	●		
S	—		Positive common
Z	●		
NS	—		Negative common
NZ	●		

* "Nil" is not available for the SI unit manifold.
* For the non-polar type, be careful of surge voltage intrusion. Refer to page 293 for details. (Excludes when an SI unit manifold is used)
* Only "Z" and "NZ" types are available with a power saving circuit. Select a valve which is suited to the SI unit output polarity or SI unit specification when the SI unit is selected. Refer to the pages below for details.
  EX500: pp. 99, 105 EX600: p. 115
  EX245: p. 124-1 EX250: p. 127
  EX260: p. 135 EX126: p. 143
  EX120: p. 151 EX180: p. 156-1

❿ Manual override

Nil: Non-locking push type

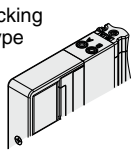

D: Push-turn locking slotted type

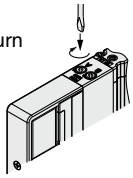

E: Push-turn locking lever type

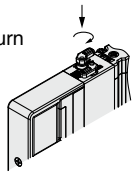

F: Slide locking type

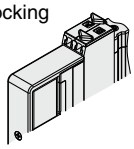

* Refer to page 34 for the safety slide locking manual override.

⓫ Type of mounting screw

Nil	Round head combination screw
B	Hexagon socket head cap screw
K	Round head combination screw (Drop prevention type)
H	Hexagon socket head cap screw (Drop prevention type)

* For "K" and "H," the valve body cover has a drop prevention construction to stop the mounting screws from falling out when the valve is removed for maintenance, etc.
* **When ordering a valve individually, the base gasket is not included.**
  Since the base gasket is attached to the manifold, please order the base gasket separately if it is needed for maintenance. Refer to page 198 for base gasket and mounting screw part numbers.
* "B" and "H" cannot be selected for the individual SUP/EXH spacer assembly, interface regulator, or double check spacer assembly with residual pressure release valve.

⚠ Protective class class Ⅲ (Mark: ⧐)

Type 10
Side Ported

Type 11
Bottom Ported

Plug-in Connector Connecting Base: Plug-in Mixed Mounting Type Manifold

D-sub Connector (IP40/67) | Flat Ribbon Cable | Terminal Block Box/Spring Type (IP67) | Terminal Block Box (IP67) | Lead Wire (IP67) | Circular Connector (IP67) | EX500 (IP67) | EX600 (IP67) | EX245 (IP65) | EX250 (IP67) | EX260 (IP67) | EX126 (IP67) | EX120 | EX180

SY5000/7000 Series

∗ Refer to the connector type.

The SY5000 can be mounted onto the SY7000 size manifold.

How to Order Manifolds

Refer to page 175 for the dimensions of Type 11/ Bottom-ported type.

SS5Y7 – M 10 F 1 – 05 U ☐ – C 10 8 ☐

❶ ❷ ❸ ❹ ❺ ❻ ❼ ❽ ❾ ❿

Mixed Mounting Type

It is possible to mount the SY5000 size valves on all stations. In this case, there is no need to fill in part ❽ in the order code. However, the manifold block width should be 19 mm.

❶ Type

10	Side ported
11	Bottom ported

❷ Connector type

Symbol	Type		Page
F	D-sub connector (25 pins)	IP40	41
FW		IP67	
P	Flat ribbon cable	26 pins	
PG		20 pins	
PH		10 pins	
TC	Terminal block box (Spring type)		59
T	Terminal block box		67
L1	Lead wire	34 cores	77
L2		17 cores	
L3		9 cores	
M	Circular connector		87
S☐	Serial transmission	EX500 Gateway Decentralized System 2 (128 points)	97
S☐		EX500 Gateway Decentralized System (64 points)	103
S6☐		EX600	113
SA☐		EX245	124-1
S☐		EX250	125
S☐		EX260	133
S4☐∗1		EX126	141
S3☐∗1		EX120	149
S8☐		EX180	156-1

∗1 EX126, EX120 are not yet UL-compliant.
∗ Refer to the pages shown in the table above for details.

❸

• With Lead wire

Lead wire length

1	0.6 m
2	1.5 m
3	3 m

• With D-sub connector (IP40/67) and Flat ribbon cable

Connector entry direction

1	Upward
2	Lateral

∗ It is not necessary to select the items above for the valve with terminal block box or with circular connector or the serial transmission type.

❹ Valve stations

Symbol	Stations	Note
02	2 stations	Some connectors have a limitation on the number of stations. Refer to the pages shown in the table "Connector type" for details.
⋮	⋮	
24	24 stations	

❺ P, E port entry

U	U side (2 to 10 stations)
D	D side (2 to 10 stations)
B	Both sides (2 to 24 stations)

∗ Refer to ❼ on page 113 for the EX600, page 125 for the EX250, and page 156-1 for the EX180.

❻ SUP/EXH block assembly

Nil	Internal pilot
S	Internal pilot, Built-in silencer
R	External pilot

∗ 3/5(E) port is plugged for the built-in silencer type.
∗ Refer to ❼ on page 113 for the EX600, page 125 for the EX250, and page 156-1 for the EX180.

❼ Fitting type: One-touch fitting

Symbol	A, B port		
C	Metric size	Straight	
L		Elbow	Upward∗2
B			Downward∗2
N	Inch size	Straight	
LN		Elbow	Upward∗2
BN			Downward∗2
CM∗1	Mixed sizes	Straight	
LM∗1		Elbow (Including upward and downward piping)∗2	

∗1 Select CM or LM if mixed port sizes are to be used for each series. (For example, if mixed sizes, such as C6 and C8, are to be used for the SY5000 series) In such cases, indicate the sizes on the manifold specification sheet.
The direction of P, E port fittings is the same as for the A, B port. If selecting "LM," indicate it on the manifold specification sheet for the P, E port fitting direction.
∗2 To avoid interference with the body or piping, select a downward elbow port when mounting the optional spacer assembly (pages 204 to 206). Elbow fittings are not available for Type 11 (Bottom ported).
∗ Elbow fittings: ø1/4" and ø5/16" are not available.

❽ SY7000: A, B port size

(Metric/One-touch fitting)

Symbol	Port size
6	ø6
8	ø8
10	ø10
12	ø12
Nil	For all stations of SY5000

(Inch/One-touch fitting)

Symbol	Port size
7	ø1/4"
9	ø5/16"
11	ø3/8"
Nil	For all stations of SY5000

∗ No symbol needs to be specified when fitting type “CM” or “LM” is selected.

❾ SY5000: A, B port size

(Metric/One-touch fitting)

Symbol	Port size
6	ø6
8	ø8
10	ø10
12	ø12

(Inch/One-touch fitting)

Symbol	Port size
7	ø1/4"
9	ø5/16"
11	ø3/8"

∗ The valve pitch is 19 mm, the same as that of the SY7000.
∗ No symbol needs to be specified when fitting type “CM” or “LM” is selected.

❿ Mounting and Option

Symbol	Mounting	Option	
		Name plate	Station number
Nil	Direct mounting	—	—
AA		●	●
BA		●	—
D□	DIN rail mounting	—	—
A□		●	●
B□		●	—

DIN Rail Option

Nil	Standard length	
0	Without DIN rail (with bracket)	
3	For 3 stations	Specify a longer rail than the total length of specified stations.
⋮	⋮	
24	For 24 stations	

∗ Enter the number of stations inside □ when it is larger than the number of valve stations. (Refer to “DIN Rail Option” above.)
∗ Only direct mounting is available for the type 11 bottom-ported type.
∗ Refer to page 172 to determine the L3 using “Calculation formula” for the DIN rail length. (For the SY3000 and SY5000 mixed mounting type)
∗ The manifold block width is 19 mm for both the SY5000 and SY7000 sizes.
∗ Refer to page 295 for the fixation of DIN rail mounting type manifold.

How to Order Manifold Assembly

Example (SS5Y7-M10F1-□)

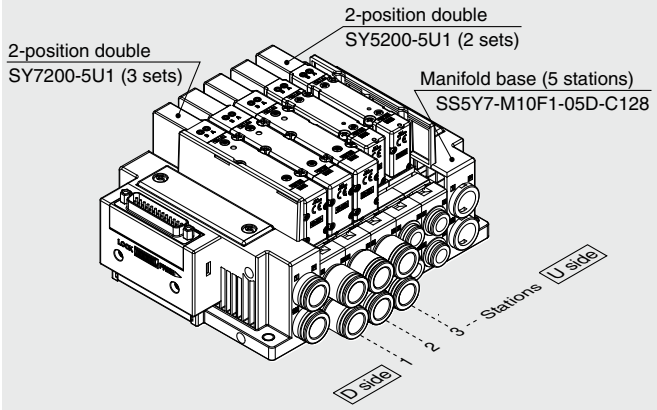

SS5Y7-M10F1-05D-C128·· 1 set (Type M10 5-station manifold base part no.)
∗SY7200-5U1 ····· 3 sets (2-position double part no.)
∗SY5200-5U1 ····· 2 sets (2-position double part no.)
The asterisk denotes the symbol for the assembly. Prefix it to the part numbers of the valve, etc.

- For the valve arrangement, the valve closest to the D side is considered the 1st station.
- Under the manifold part number, state the valves to be mounted in order starting with the 1st station as shown in the figure above. If the arrangement becomes too complicated, specify the details on a manifold specification sheet.

∗ When mixing top-ported configurations, select from those listed on page 178. In such cases, use caution as there is also output on the A and B ports on the base side.
Specify on the manifold specification sheet if plugs are required for the A and B ports on the base side.

⚠ Protective class class Ⅲ (Mark: ⧫)

How to Order Valves (With mounting screw)

Refer to page 15 for valve specifications.

SY 7 1 0 0 □ □ □ □ – 5 □ □ 1 – □

❶ ❷ ❸ ❹ ❺ ❻ ❼ ❽ ❾ ❿ ⓫

❸ Base mounted

❶ Series

5	SY5000
7	SY7000

❷ Type of actuation

1	2-position	Single
2		Double
3	3-position	Closed center
4		Exhaust center
5		Pressure center
A*1	4-position dual 3-port	N.C./N.C.
B*1		N.O./N.O.
C*1		N.C./N.O.

*1 Only the rubber seal type is available for the 4-position dual 3-port valve.

❸ Seal type

0	Rubber seal
1	Metal seal

❹ Pilot type

Nil	Internal pilot
R	External pilot

❺ Back pressure check valve (Built-in valve type)

Nil	None
H	Built-in

* Only the rubber seal type is available. A manifold installed type is available if a back pressure check valve with a metal seal is required. Refer to page 212 for ordering examples. However, it is not recommended to use the built-in valve type and the manifold installed type at the same time because it will reduce the flow.
* The built-in valve type back pressure check valve is not available for the 3-position type or the SY7000.

❻ Pilot valve option

Nil	Standard (0.7 MPa)
B	Quick response type (0.7 MPa)
K*1	High pressure type (1.0 MPa)

*1 Only the metal seal type is available for the high pressure type.

❼ Coil type

Nil	Standard
T	With power saving circuit (Continuous duty type)

* Be sure to select the power saving circuit type if the valve is to be continuously energized for long periods of time.
* Be careful of the energizing time when the power saving circuit is selected. Refer to page 292 for details.

❽ Rated voltage

5	24 VDC
6	12 VDC

* Only 24 VDC is available for the serial transmission type.

❾ Light/surge voltage suppressor and common specification

Symbol	With light	Surge voltage suppressor	Common specification
Nil	—	—	Non-polar
R	—	●	
U	●		
S	—		Positive common
Z	●		
NS	—		Negative common
NZ	●		

* "Nil" is not available for the SI unit manifold.
* For the non-polar type, be careful of surge voltage intrusion. Refer to page 293 for details. (Excludes when an SI unit manifold is used)
* Only "Z" and "NZ" types are available with a power saving circuit. Select a valve which is suited to the SI unit output polarity or SI unit specification when the SI unit is selected. Refer to the pages below for details.
  EX500: pp. 99, 105 EX600: p. 115
  EX250: p. 127 EX260: p. 135
  EX126: p. 143 EX120: p. 151

❿ Manual override

Nil: Non-locking push type	**D**: Push-turn locking slotted type
E: Push-turn locking lever type	**F**: Slide locking type

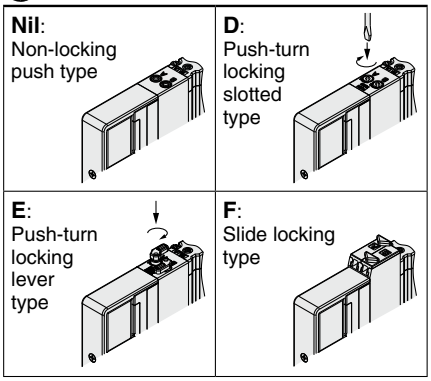

* Refer to page 34 for the safety slide locking manual override.

⓫ Type of mounting screw

Nil	Round head combination screw
B	Hexagon socket head cap screw
K	Round head combination screw (Drop prevention type)
H	Hexagon socket head cap screw (Drop prevention type)

* For "K" and "H," the valve body cover has a drop prevention construction to stop the mounting screws from falling out when the valve is removed for maintenance, etc.
* **When ordering a valve individually, the base gasket is not included.**
  Since the base gasket is attached to the manifold, please order the base gasket separately if it is needed for maintenance. Refer to page 198 for base gasket and mounting screw part numbers.
* "B" and "H" cannot be selected for the individual SUP/EXH spacer assembly, interface regulator, or double check spacer assembly with residual pressure release valve.

⚠ Protective class class Ⅲ (Mark: Ⅲ)

Dimensions: SY3000/5000 Series

Plug-in Connector Connecting Base | Type 10/Side Ported | Mixed Mounting Type

SS5Y5-M10□-Stations U D B

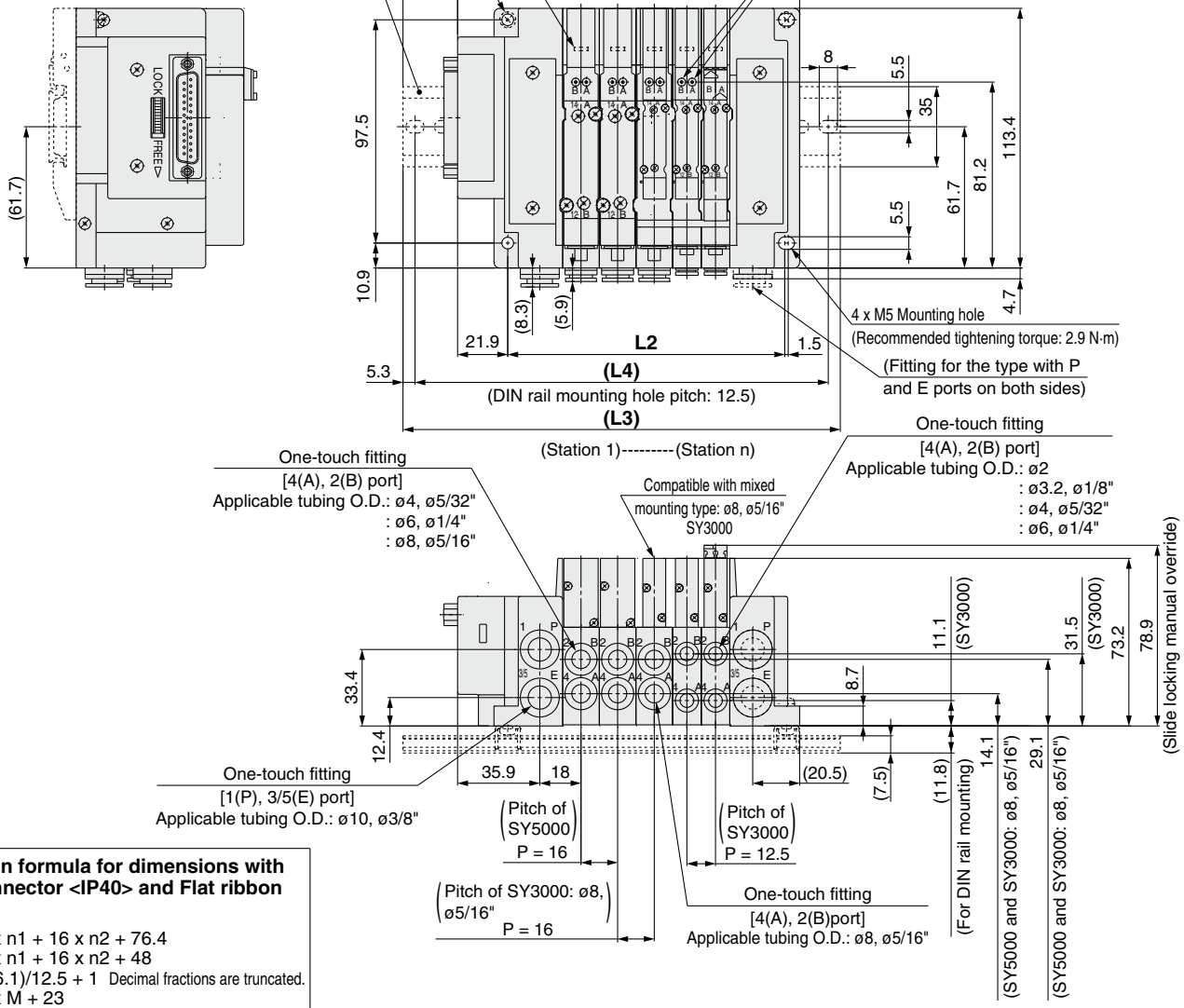

Calculation formula for dimensions with D-sub connector <IP40> and Flat ribbon cable

L1 = 12.5 x n1 + 16 x n2 + 76.4
L2 = 12.5 x n1 + 16 x n2 + 48
M = (L1 + 6.1)/12.5 + 1 Decimal fractions are truncated.
L3 = 12.5 x M + 23
L4 = L3 – 10.5
L5 = (L3 – L1 + 6.1)/2

n1: Number of valve stations of the SY3000
n2: Number of valve stations of the SY5000 (Including the stations of the SY3000: ø8, ø5/16")

Calculation formula for dimensions with D-sub connector <IP67>, Terminal block box (Spring type), Terminal block box, Lead wire, Circular connector, EX500/600/250/260/126/120 serial transmission

L1 = 12.5 x n1 + 16 x n2 + a + b x n3
L2 = 12.5 x n1 + 16 x n2 x 48
M = L1/12.5 + 1 Decimal fractions are truncated.
L3 = 12.5 x M + 23
L4 = L3 – 10.5
L5 = (L3 – L1)/2
L6 = b x n3 + c

n1: Number of valve stations of the SY3000
n2: Number of valve stations of the SY5000 (Including the stations of the SY3000: ø8, ø5/16")
n3: Number of I/O units or input block stations

∗ Refer to pages 118 and 119 for dimensions of the EX600 serial transmission with I/O unit and page 129 for the EX250 serial transmission with input block when L6, b, and c are used for the calculation formula.

∗ Refer to pages 157 and 158 for dimensions of the external pilot, built-in silencer, and elbow fittings.

Coefficient	a	b	c
D-sub connector <IP67>	90.5	—	—
Terminal block box (Spring type)	128	—	—
Terminal block box or Serial transmission: EX126	149.3	—	—
Lead wire or Circular connector	97	—	—
EX500 Gateway Decentralized System 2 (128 points)	88.7	—	—
EX500 Gateway Decentralized System (64 points)	88.5	—	—
Serial transmission: EX600 (M12 connector)	141.5	47	81.5
Serial transmission: EX600 (7/8 inch connector)	158	47	81.5
Serial transmission: EX250	141.5	21	81.5
Serial transmission: EX260	88.7	—	—
Serial transmission: EX120	84.7	—	—

Dimensions: SY5000/7000 Series

Plug-in Connector Connecting Base | Type 10/Side Ported | Mixed Mounting Type

SS5Y7-M10□-Stations U D B

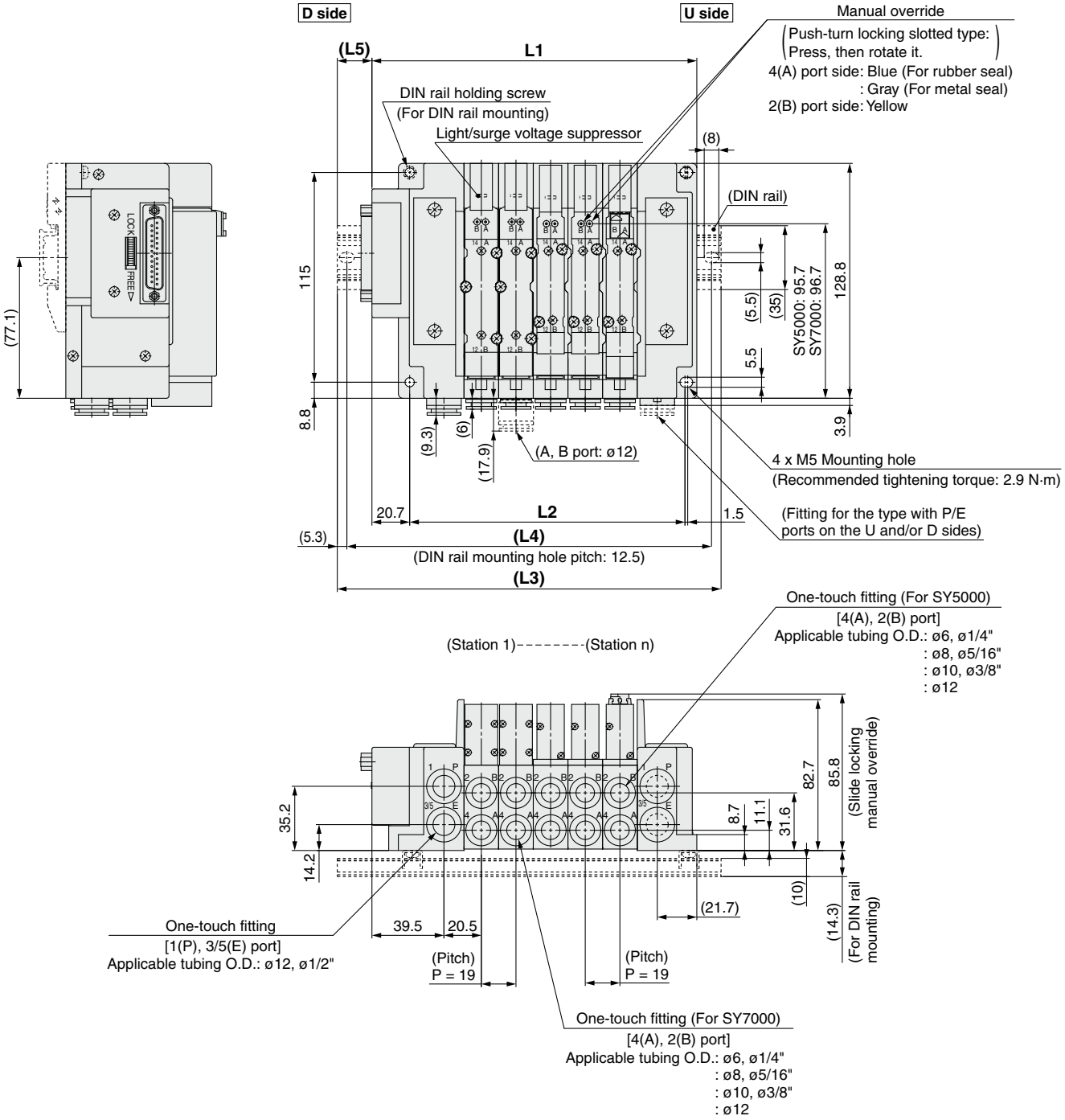

* Refer to page 159 for dimensions of the external pilot and built-in silencer.
* Refer to the pages below for L1, L2, L3, L4 dimensions and other dimensions that are not specified in each wiring specification.

D-sub connector <IP40>	: p. 46
D-sub connector <IP67>	: p. 49
Flat ribbon cable	: p. 52
Terminal block box (Spring type)	: pp. 62, 63
Terminal block box	: p. 72
Lead wire	: p. 82
Circular connector	: p. 92
EX500 (128 points)	: p. 102
EX500 (64 points)	: p. 108
EX600	: pp. 120, 121
EX250	: p. 130
EX260	: p. 138
EX126	: p. 146
EX120	: p. 154

Dimensions: SY3000/5000 Series

Plug-in Connector Connecting Base — **Type 11/Bottom Ported** — **Mixed Mounting Type**

SS5Y5-M11□-Stations U D B

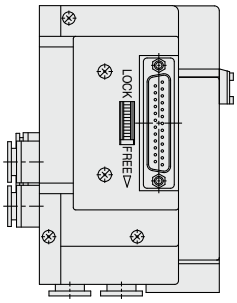

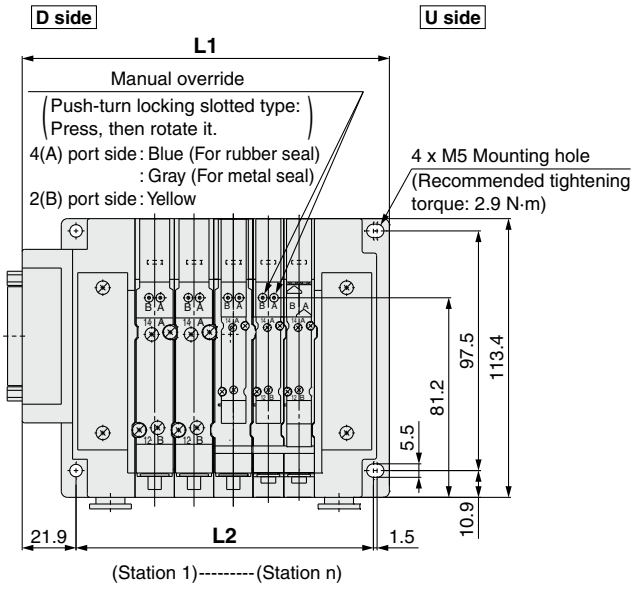

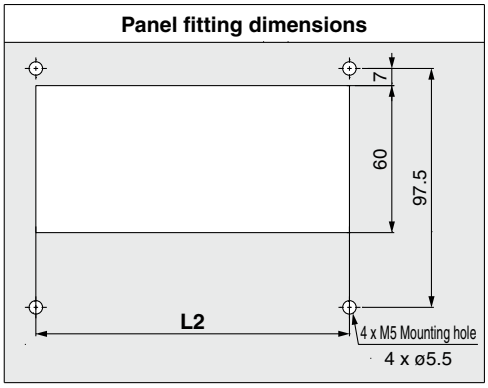

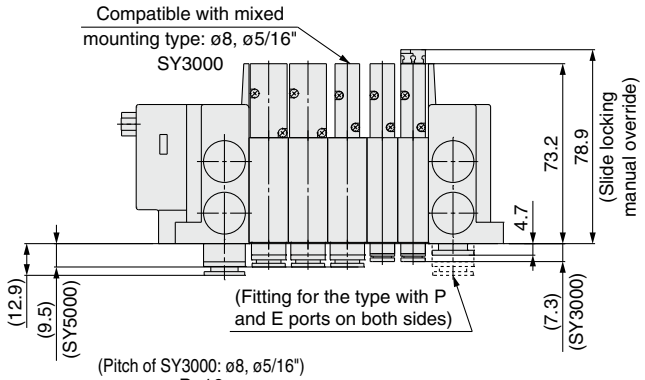

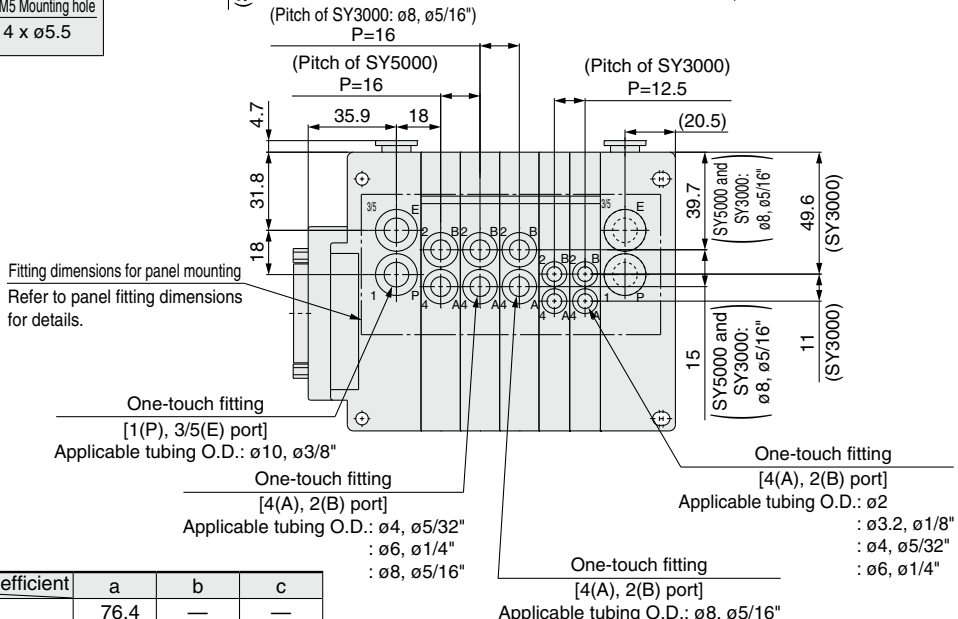

Calculation formula for dimensions

L1 = 12.5 x n1 + 16 x n2 + a + b x n3
L2 = 12.5 x n1 + 16 x n2 + 48
L6 = b x n3 + c

n1: Number of valve stations of the SY3000
n2: Number of valve stations of the SY5000 (Including the stations of the SY3000: ø8, ø5/16")
n3: Number of I/O units or input block stations

* Refer to pages 118 and 119 for dimensions of the EX600 serial transmission with I/O unit and page 129 for the EX250 serial transmission with input block when L6, b, and c are used for the calculation formula.

Coefficient	a	b	c
D-sub connector <IP40> or Flat ribbon cable	76.4	—	—
D-sub connector <IP67>	90.5	—	—
Terminal block box (Spring type)	128	—	—
Terminal block box or Serial transmission: EX126	149.3	—	—
Lead wire or Circular connector	97	—	—
EX500 Gateway Decentralized System 2 (128 points)	88.7	—	—
EX500 Gateway Decentralized System (64 points)	88.5	—	—
Serial transmission: EX600 (M12 connector)	141.5	47	81.5
Serial transmission: EX600 (7/8 inch connector)	158	47	81.5
Serial transmission: EX250	141.5	21	81.5
Serial transmission: EX260	88.7	—	—
Serial transmission: EX120	84.7	—	—

* Refer to page 160 for dimensions of the external pilot and built-in silencer.

Dimensions: SY5000/7000 Series

Plug-in Connector Connecting Base | **Type 11/Bottom Ported** | **Mixed Mounting Type**

SS5Y7-M11□-Stations U D B

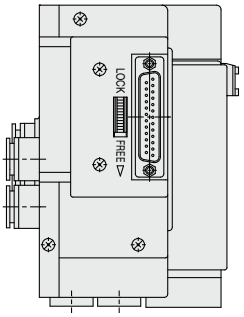

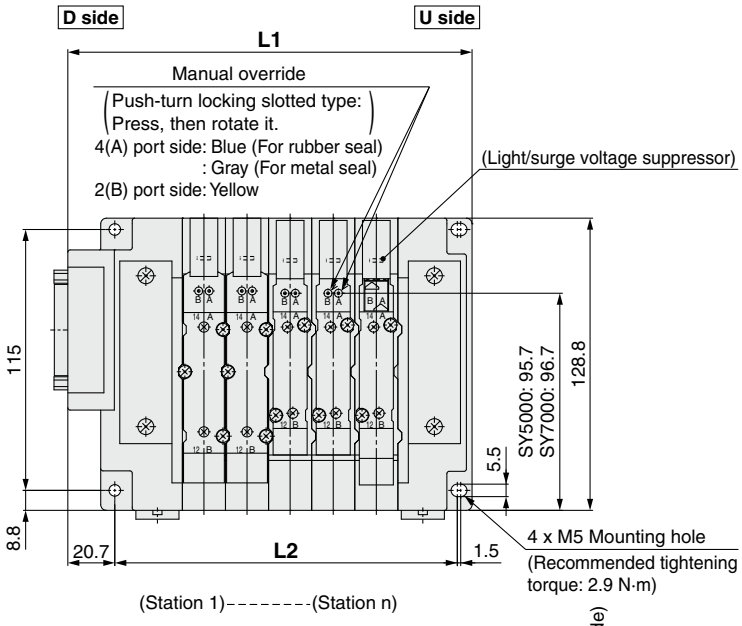

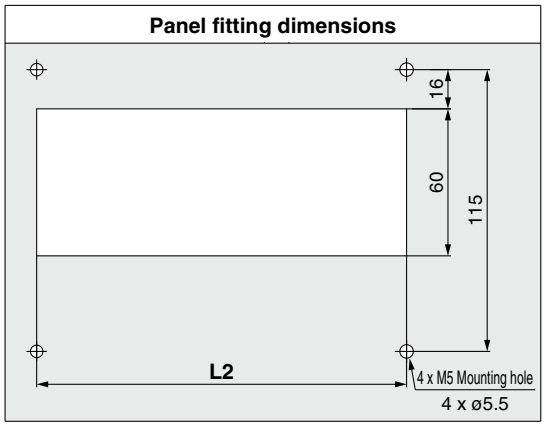

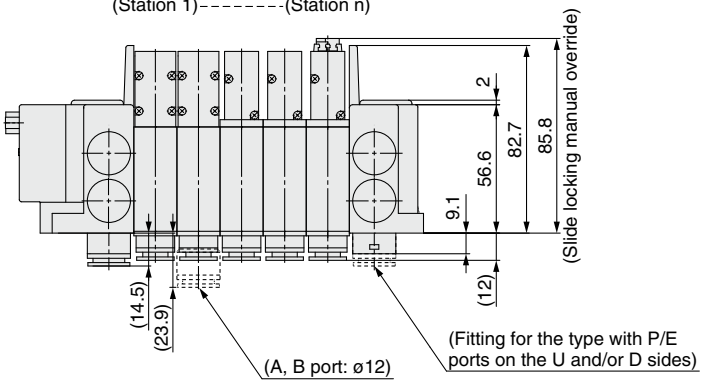

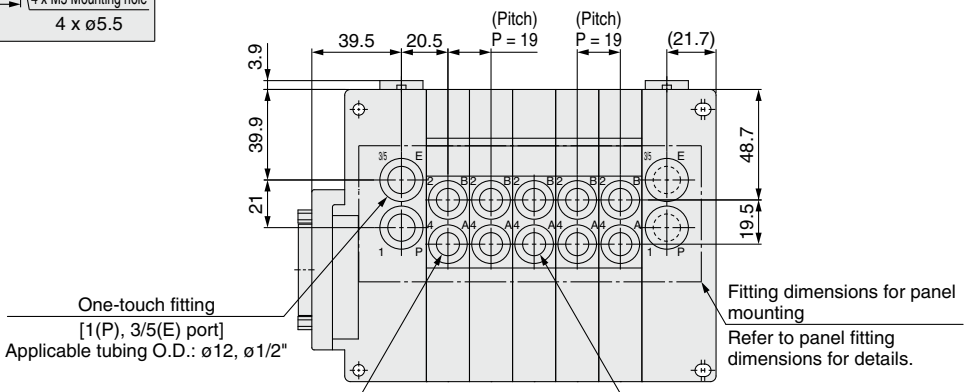

One-touch fitting (For SY7000)
[4(A), 2(B) port]
Applicable tubing O.D.: ø6, ø1/4"
: ø8, ø5/16"
: ø10, ø3/8"
: ø12

One-touch fitting (For SY5000)
[4(A), 2(B) port]
Applicable tubing O.D.: ø6, ø1/4"
: ø8, ø5/16"
: ø10, ø3/8"
: ø12

* Refer to page 161 for dimensions of the external pilot and built-in silencer.
* Refer to the pages below for L1, L2 dimensions and other dimensions that are not specified in each wiring specification.

Dimensions of Type 11/Bottom ported: p. 161
D-sub connector <IP40> : p. 46
D-sub connector <IP67> : p. 49
Flat ribbon cable : p. 52
Terminal block box (Spring type) : pp. 62, 63
Terminal block box : p. 72
Lead wire : p. 82
Circular connector : p. 92
EX500 (128 points) : p. 102
EX500 (64 points) : p. 108
EX600 : pp. 120, 121
EX250 : p. 130
EX260 : p. 138
EX126 : p. 146
EX120 : p. 154

Plug-in Connector Connecting Base: Plug-in Mixed Mounting Type Manifold

D-sub Connector (IP40/67) | Flat Ribbon Cable | Terminal Block Box/Spring Type (IP67) | Terminal Block Box (IP67) | Lead Wire (IP67) | Circular Connector (IP67) | EX500 (IP67) | EX600 (IP67) | EX245 (IP65) | EX250 (IP67) | EX260 (IP67) | EX126 (IP67) | EX120 | EX180

Type 12 Top Ported

SY3000/5000/7000 Series

∗ Refer to the connector type.

For the SY5000 series, the SY5000 and the SY3000 can be mounted on the same manifold.
For the SY7000 series, the SY7000 and the SY5000 can be mounted on the same manifold.

How to Order Manifolds

Refer to pages 163 and 164 for the dimensions of Type 12/Top-ported type.

SS5Y [5] – [M] 12 [F] [1] – [05] [U] [ ] – [ ] [ ]
❶ ❷ ❸ ❹ ❺ ❻ ❼ ❽

Mixed Mounting Type

For the SY5000 series, it is possible to mount the SY3000 size valves on all stations. However, the SY3000 manifold block width should be 12.5 mm. (16 mm for ø8 or ø5/16" One-touch fitting)
Also, for the SY7000 series, it is possible to mount the SY5000 size valves on all stations. However, the SY3000 cannot be mounted onto the SY7000 series.

❶ Series

5	SY5000
7	SY7000

❸

• With Lead wire

Lead wire length

1	0.6 m
2	1.5 m
3	3 m

• With D-sub connector (IP40/67) and Flat ribbon cable

Connector entry direction

1	Upward
2	Lateral

∗ It is not necessary to select the items above for the valve with terminal block box or with circular connector or the serial transmission type.

❹ Valve stations

Symbol	Stations	Note
02	2 stations	Some connectors have a limitation on the number of stations. Refer to the pages shown in the table "Connector type" for details.
⋮	⋮	
24	24 stations	

❼ P, E port size (One-touch fittings)

Symbol	SY5000	SY7000	Note
Nil	ø10	ø12	Metric size
N	ø3/8"	ø1/2"	Inch size

❷ Connector type

Symbol	Type		Page
F	D-sub connector (25 pins)	IP40	53
FW		IP67	
P	Flat ribbon cable	26 pins	
PG		20 pins	
PH		10 pins	
TC	Terminal block box (Spring type)		64
T	Terminal block box		73
L1	Lead wire	34 cores	83
L2		17 cores	
L3		9 cores	
M	Circular connector		93
S□	Serial transmission	EX500 Gateway Decentralized System 2 (128 points)	109
S□		EX500 Gateway Decentralized System (64 points)	111
S6□		EX600	123
SA□		EX245	124-1
S□		EX250	131
S□		EX260	139
S4□∗1		EX126	147
S3□∗1		EX120	155
S8□		EX180	156-1

∗1 EX126, EX120 are not yet UL-compliant.
∗ Refer to the pages shown in the table above for details.

❺ P, E port entry

U∗1	U side (2 to 10 stations)
D∗1	D side (2 to 10 stations)
B	Both sides (2 to 24 stations)

∗1 For type "S", SUP/EXH block assembly with a built-in silencer, choose U or D for P, E port entry.
∗ Refer to page 123 for the EX600 and ❻ on page 131 for the EX250.

❻ SUP/EXH block assembly

Nil	Internal pilot
S	Internal pilot, Built-in silencer
R	External pilot

∗ The P and E ports are only available on the U and D sides for the built-in silencer type. 3/5(E) port is plugged. The silencer exhaust port is located on the opposite side of the P and E port entry. (Example: When the P and E port entry is on the D side, the silencer exhaust port is on the U side.)
∗ Refer to page 123 for the EX600 and ❻ on page 131 for the EX250.

❽ Mounting

Nil	Direct mounting	
D	DIN rail mounting (With DIN rail)	
D0	DIN rail mounting (Without DIN rail)	
D3	For 3 stations	Specify a length longer than that of the standard rail. [For the SS5Y5-M12, the SY5000 valve is now at a mountable length (manifold block length of 16 mm).]
⋮	⋮	
D24	For 24 stations	

∗ Refer to page 179 to determine the L3 using "Calculation formula" for the DIN rail length. (For the SY3000 and SY5000 mixed mounting type)
∗ Refer to page 295 for the fixation of DIN rail mounting type manifold.

How to Order Manifold Assembly

Example (SS5Y5-M12F1-□)

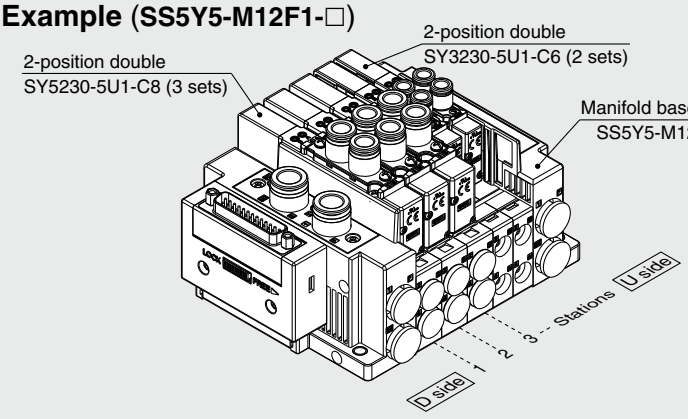

SS5Y5-M12F1-05D ··· 1 set (Type M12 5-station manifold base part no.)
∗SY5230-5U1-C8 ····· 3 sets (2-position double part no.)
∗SY3230-5U1-C6 ····· 2 sets (2-position double part no.)
→ The asterisk denotes the symbol for the assembly. Prefix it to the part numbers of the valve, etc.

• For the valve arrangement, the valve closest to the D side is considered the 1st station.
• Under the manifold part number, state the valves to be mounted in order starting with the 1st station as shown in the figure above. If the arrangement becomes too complicated, specify the details on a manifold specification sheet.

How to Order Valves (With mounting screw)

Refer to page 15 for valve specifications.

SY 3 1 3 0 □ □ □ □ – 5 □ □ 1 – C6 □ – □

❶ ❷ ❸ ❹ ❺ ❻ ❼ ❽ ❾ ❿ ⓫ ⓬ ⓭

❸: Top ported

❶ Series

3	SY3000
5	SY5000
7	SY7000

❷ Type of actuation

1	2-position	Single
2		Double
3	3-position	Closed center
4		Exhaust center
5		Pressure center
A*1	4-position dual 3-port	N.C./N.C.
B*1		N.O./N.O.
C*1		N.C./N.O.

*1 Only the rubber seal type is available for the 4-position dual 3-port valve.

❸ Seal type

0	Rubber seal
1	Metal seal

❹ Pilot type

Nil	Internal pilot
R	External pilot

❺ Back pressure check valve (Built-in valve type)

Nil	None
H	Built-in

* Only the rubber seal type is available. A manifold installed type is available if a back pressure check valve with a metal seal is required. Refer to page 212 for ordering examples. However, it is not recommended to use the built-in valve type and the manifold installed type at the same time because it will reduce the flow.
* The built-in valve type back pressure check valve is not available for the 3-position type or the SY7000.

❻ Pilot valve option

Nil	Standard (0.7 MPa)
B	Quick response type (0.7 MPa)
K*1	High pressure type (1.0 MPa)

*1 Only the metal seal type is available for the high pressure type.

❼ Coil type

Nil	Standard
T	With power saving circuit (Continuous duty type)

* Be sure to select the power saving circuit type if the valve is to be continuously energized for long periods of time.
* Be careful of the energizing time when the power saving circuit is selected. Refer to page 292 for details.

❽ Rated voltage

5	24 VDC
6	12 VDC

* Only 24 VDC is available for the serial transmission type.

❾ Light/surge voltage suppressor and common specification

Symbol	With light	Surge voltage suppressor	Common specification
Nil	—	—	Non-polar
R	—	●	
U	●		
S	—		Positive common
Z	●		
NS	—		Negative common
NZ	●		

* "Nil" is not available for the SI unit manifold.
* For the non-polar type, be careful of surge voltage intrusion. Refer to page 293 for details. (Excludes when an SI unit manifold is used)
* Only "Z" and "NZ" types are available with a power saving circuit. Select a valve which is suited to the SI unit output polarity or SI unit specification when the SI unit is selected. Refer to the pages below for details.

EX500: pp. 110, 112 EX600: p. 124
EX245: p. 124-1 EX250: p. 132
EX260: p. 140 EX126: p. 148
EX120: p. 156 EX180: p. 156-1

❿ Manual override

Nil: Non-locking push type

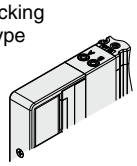

D: Push-turn locking slotted type

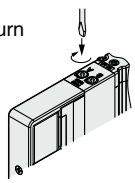

E: Push-turn locking lever type

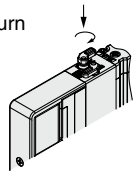

F: Slide locking type

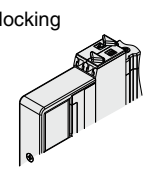

* Refer to page 34 for the safety slide locking manual override.

⓫ A, B port size

Thread piping

Symbol	Port size	Applicable series
M5	M5 x 0.8	SY3000
01	1/8	SY5000
02	1/4	SY7000

One-touch fitting (Metric)

Symbol	A, B port	SY3000	SY5000	SY7000
C2	ø2	●	—	—
C3	ø3.2	●	—	—
C4	ø4	●	●	—
C6	ø6	●	●	●
C8	ø8	—	●	●
C10	ø10	—	—	●
C12	ø12	—	—	●

One-touch fitting (Inch)

Symbol	A, B port	SY3000	SY5000	SY7000
N1	ø1/8"	●	—	—
N3	ø5/32"	●	●	—
N7	ø1/4"	●	●	●
N9	ø5/16"	—	●	●
N11	ø3/8"	—	—	●

⓬ Thread type

Nil	Rc
F	G
N	NPT
T	NPTF

* Only Nil is available for M5.

⓭ Type of mounting screw

Nil	Round head combination screw
B	Hexagon socket head cap screw
K	Round head combination screw (Drop prevention type)
H	Hexagon socket head cap screw (Drop prevention type)

* For "K" and "H," the valve body cover has a drop prevention construction to stop the mounting screws from falling out when the valve is removed for maintenance, etc.
* **When ordering a valve individually, the base gasket is not included.**
  Since the base gasket is attached to the manifold, please order the base gasket separately if it is needed for maintenance. Refer to page 198 for base gasket and mounting screw part numbers.
* "B" and "H" cannot be selected for the individual SUP/EXH spacer assembly or interface regulator.

Protective class class Ⅲ (Mark: ⧾)

Plug-in Connector Connecting Base | Type 12/Top Ported | Mixed Mounting Type

Dimensions: SY5000 Series

SS5Y5-M12□-Stations U D B

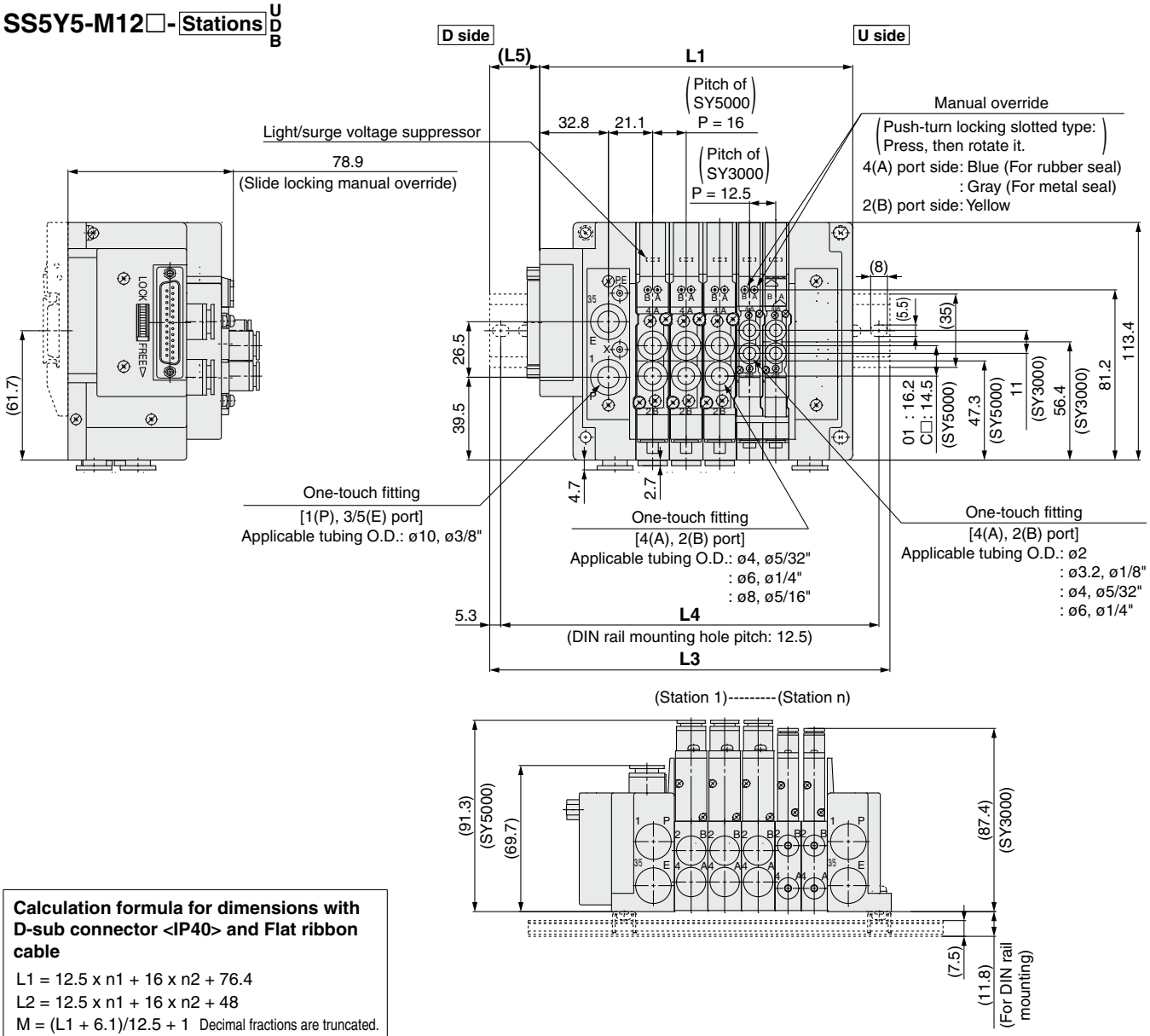

Calculation formula for dimensions with D-sub connector <IP40> and Flat ribbon cable

L1 = 12.5 x n1 + 16 x n2 + 76.4
L2 = 12.5 x n1 + 16 x n2 + 48
M = (L1 + 6.1)/12.5 + 1 Decimal fractions are truncated.
L3 = 12.5 x M + 23
L4 = L3 – 10.5
L5 = (L3 – L1 + 6.1)/2

n1: Number of valve stations of the SY3000
n2: Number of valve stations of the SY5000

Calculation formula for dimensions with D-sub connector <IP67>, Terminal block box (Spring type), Terminal block box, Lead wire, Circular connector, EX500/600/250/260/126/120 serial transmission

L1 = 12.5 x n1 + 16 x n2 + a + b x n3
L2 = 12.5 x n1 + 16 x n2 x 48
M = L1/12.5 + 1 Decimal fractions are truncated.
L3 = 12.5 x M + 23
L4 = L3 – 10.5
L5 = (L3 – L1)/2
L6 = b x n3 + c

n1: Number of valve stations of the SY3000
n2: Number of valve stations of the SY5000
n3: Number of I/O units or input block stations

* Refer to pages 118 and 119 for dimensions of the EX600 serial transmission with I/O unit and page 129 for the EX250 serial transmission with input block when L6, b, and c are used for the calculation formula.

Coefficient	a	b	c
D-sub connector <IP67>	90.5	—	—
Terminal block box (Spring type)	128	—	—
Terminal block box or Serial transmission: EX126	149.3	—	—
Lead wire or Circular connector	97	—	—
EX500 Gateway Decentralized System 2 (128 points)	88.7	—	—
EX500 Gateway Decentralized System (64 points)	88.5	—	—
Serial transmission: EX600 (M12 connector)	141.5	47	81.5
Serial transmission: EX600 (7/8 inch connector)	158	47	81.5
Serial transmission: EX250	141.5	21	81.5
Serial transmission: EX260	88.7	—	—
Serial transmission: EX120	84.7	—	—

* Refer to page 158 for dimensions of the external pilot and elbow fittings.

Dimensions: SY7000 Series

Plug-in Connector Connecting Base — Type 12/Top Ported, Mixed Mounting Type

SS5Y7-M12□-Stations U D B

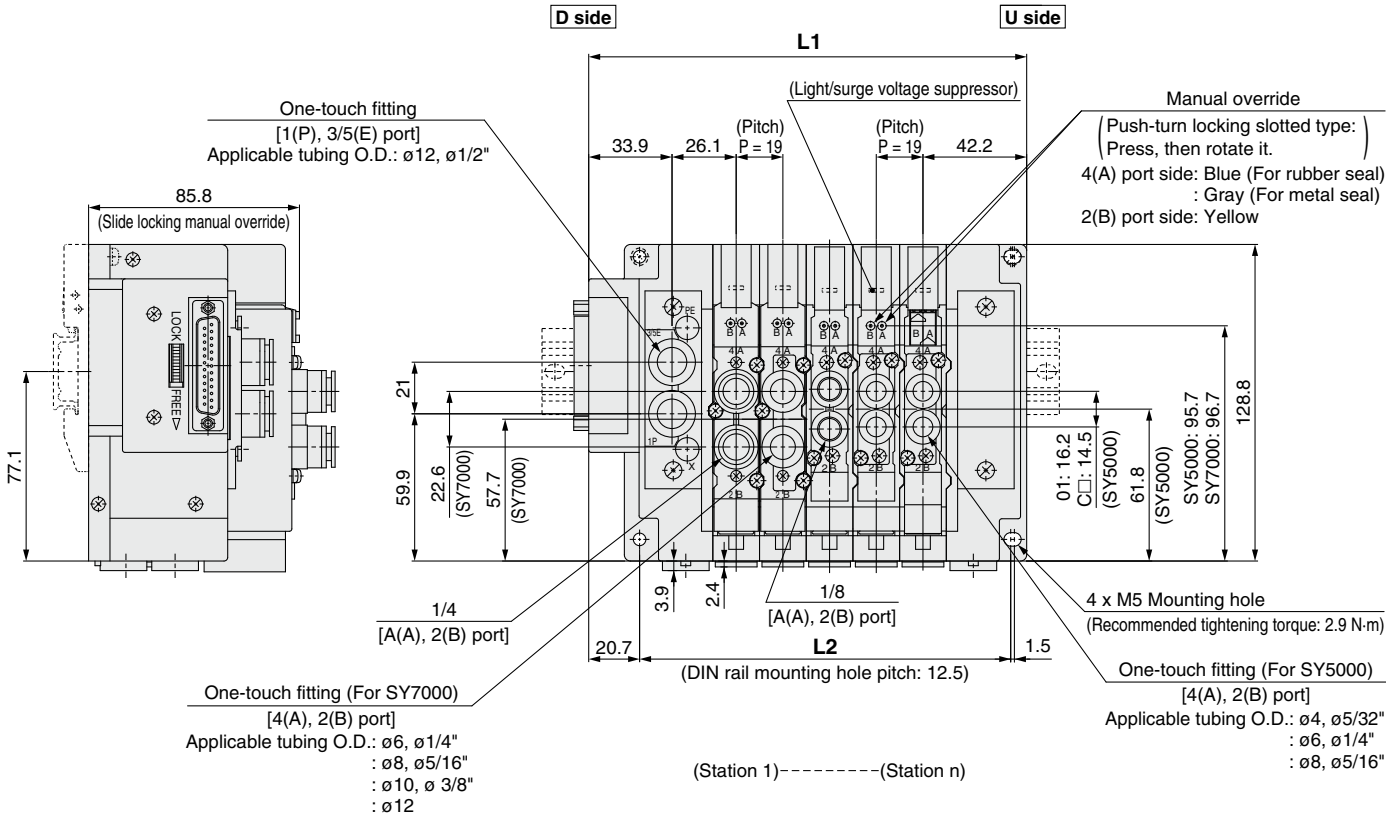

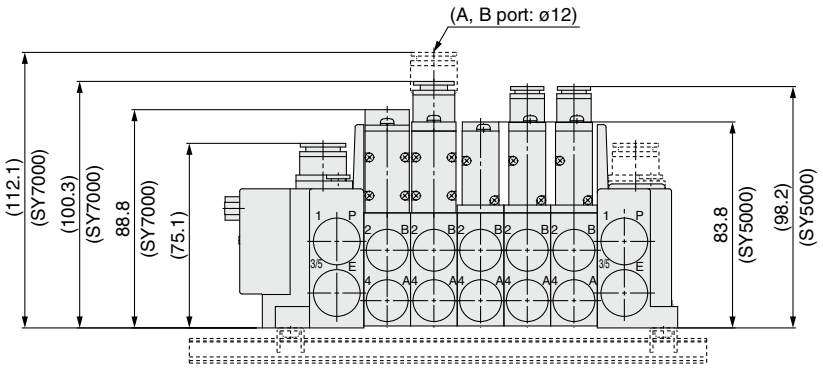

* Refer to page 159 for dimensions of the external pilot and elbow fittings.
* Refer to the pages below for L1, L2, L3, L4 dimensions and other dimensions that are not specified in each wiring specification.

Dimensions of Type 12/Top ported: p. 164
D-sub connector <IP40> : p. 46
D-sub connector <IP67> : p. 49
Flat ribbon cable : p. 52
Terminal block box (Spring type) : p. 63
Terminal block box : p. 72
Lead wire : p. 82
Circular connector : p. 92
EX500 (128 points) : p. 102
EX500 (64 points) : p. 108
EX600 : pp. 120, 121
EX250 : p. 130
EX260 : p. 138
EX126 : p. 146
EX120 : p. 154

SY3000/5000/7000 Series Type 10, 11, 12
Connector Connecting Base Manifold Exploded View

Manifold Exploded View p. 197

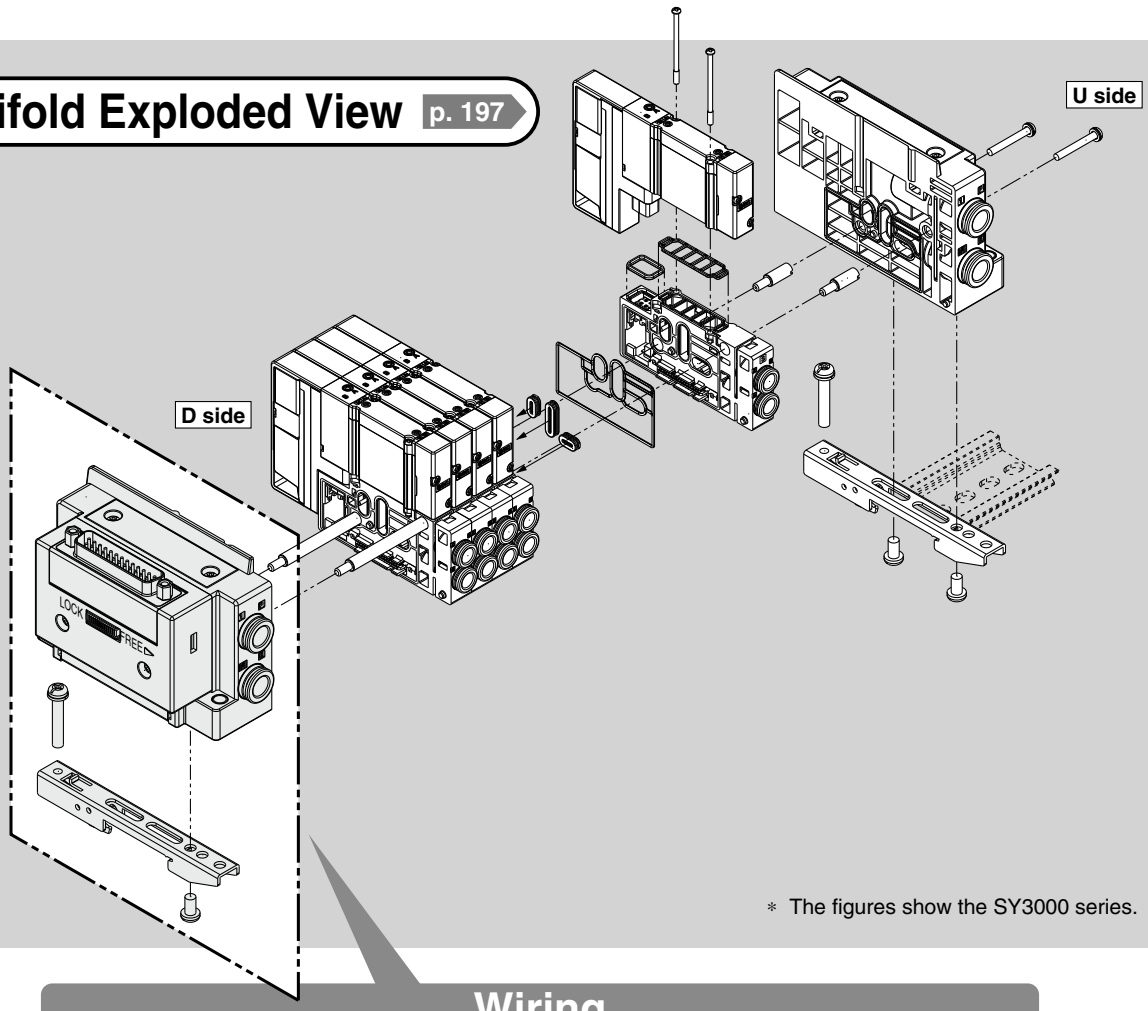

∗ The figures show the SY3000 series.

Wiring

D-sub Connector <IP40> /Flat Ribbon Cable p. 182 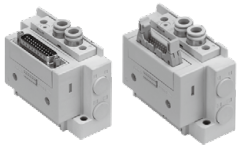	**D-sub Connector <IP67>** p. 183 	**Terminal Block Box (Spring Type)** p. 184 	**Terminal Block Box** p. 185 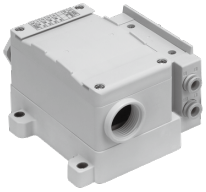	**Lead Wire** p. 186 
Circular Connector p. 187 	**EX500 Gateway Decentralized System 2 (128 Points)** p. 188 	**EX500 Gateway Decentralized System (64 Points)** p. 189 	**EX600** p. 190 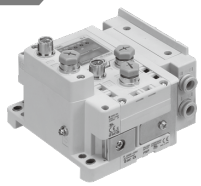	**EX245** p. 192-1 
EX250 p. 193 	**EX260** p. 194 	**EX126** p. 195 	**EX120** p. 196 	**EX180** p. 196-1 

Wiring

D-sub Connector <IP40>/Flat Ribbon Cable

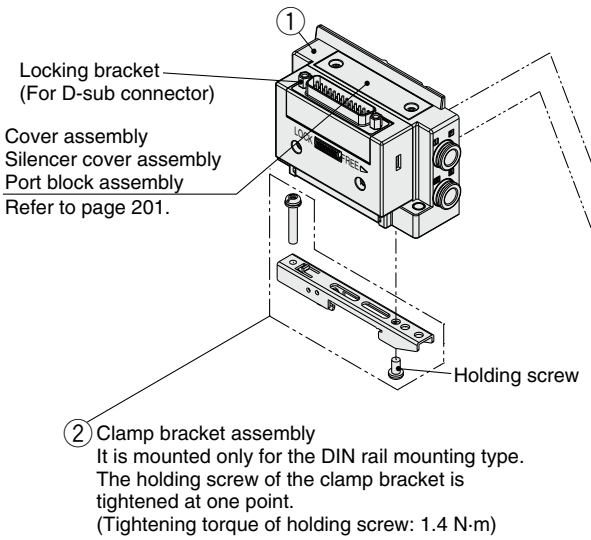

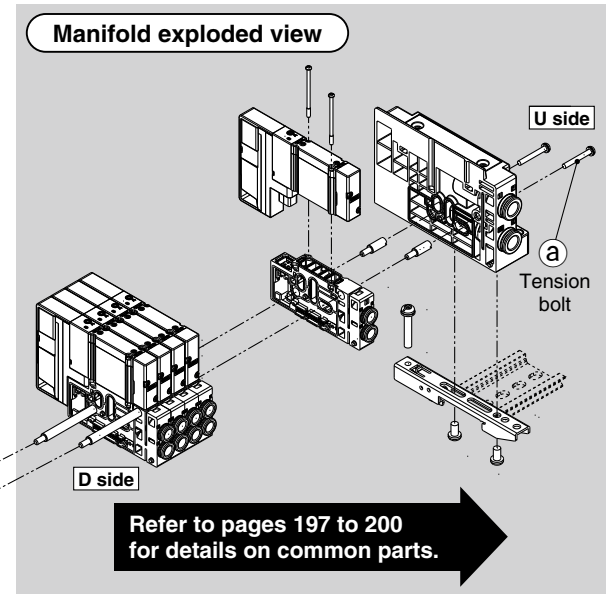

Manifold Parts Nos.

① SUP/EXH block assembly

SY 3 0M − 1 − 11 A □ 1 − C8 − □

Series

3	SY3000
5	SY5000
7	SY7000

SUP/EXH block assembly

11	D-sub connector <IP40>
12	Flat ribbon cable (26 pins)
13	Flat ribbon cable (20 pins)
14	Flat ribbon cable (10 pins)

Connector entry direction

1	Upward
2	Lateral

Pilot, Silencer/Piping type

Symbol	Pilot type Internal	Pilot type External	Built-in silencer	Piping direction
Nil	●	—	—	Side
S	●	—	●	
R	—	●	—	
V	●	—	—	Top
RV	—	●	—	
VP	●	—	●*1	
B	●	—	—	Bottom
BS	●	—	●	
BR	—	●	—	

*1 For silencer (supply side) E port is plugged.
* "B" for the bottom-ported type can be selected for the SY5000/7000 series.

Mounting

Nil	Direct mounting
D0	DIN rail mounting (Without DIN rail)

* For the bottom-ported type, the symbol is nil.

P, E port size (One-touch fittings)

Symbol		P, E port	SY3000	SY5000	SY7000	Note
C8		ø8	●	—	—	Side/Bottom/ Top ported Metric size
C10		ø10	—	●	—	
C12		ø12	—	—	●	
N9		ø5/16"	●	—	—	Side/Bottom/ Top ported Inch size
N11		ø3/8"	—	●	—	
N13		ø1/2"	—	—	●	
L8	Upward elbow	ø8	●	—	—	Side ported Metric size
L10		ø10	—	●	—	
L12		ø12	—	—	●	
LN9		ø5/16"	●	—	—	Side ported Inch size
LN11		ø3/8"	—	●	—	
LN13		ø1/2"	—	—	●	
B8	Downward elbow	ø8	●	—	—	Side ported Metric size
B10		ø10	—	●	—	
B12		ø12	—	—	●	
BN9		ø5/16"	●	—	—	Side ported Inch size
BN11		ø3/8"	—	●	—	
BN13		ø1/2"	—	—	●	
00*1		Plug	●	●	●	P/E port entry on one side or Top ported
00U*2		Plug	●	●	●	

*1 It can be selected only if no symbol or "S" or "V" or "B" is selected for the pilot and the piping.
*2 "00U" is available only for the D-sub connector type and it has an inch size locking bracket.

SUP/EXH block assembly (D side) accessories and the number of accessories

Accessories	SY3000	SY5000 SY7000
ⓐ **Tension bolt**	None*1	3 pcs.

*1 Since the nuts are embedded in the SUP/EXH block

② Clamp bracket assembly

Series	Part no.
SY3000	SY30M-15-1A
SY5000/7000	SY50M-15-1A

* Part number is for one assembly.

Wiring

D-sub Connector <IP67>

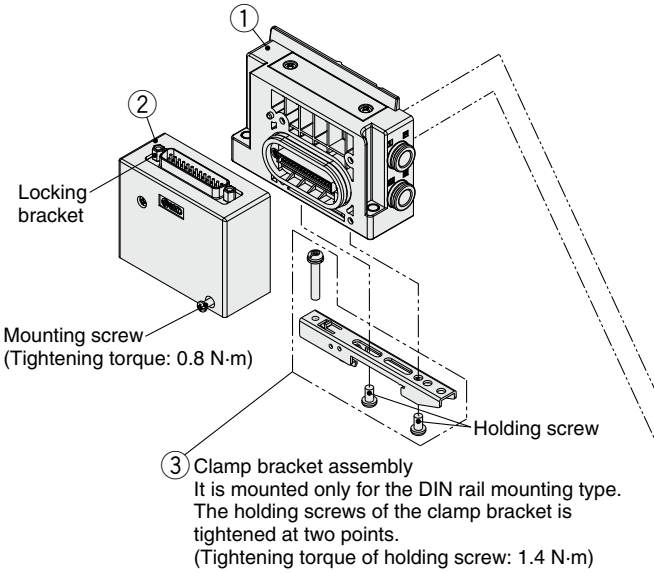

Manifold exploded view

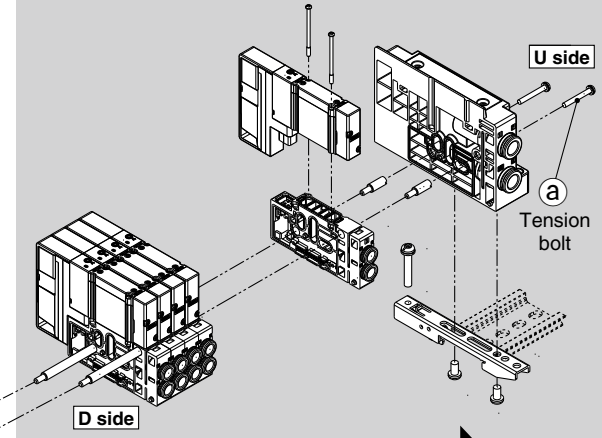

Refer to pages 197 to 200 for details on common parts.

Manifold Parts Nos.

① SUP/EXH block assembly

SY 3 0M − 1 − 1A □ − C8 − □

Series

3	SY3000
5	SY5000
7	SY7000

Mounting

Nil	Direct mounting
D0	DIN rail mounting (Without DIN rail)

∗ For the bottom-ported type, the symbol is nil.

Pilot, Silencer/Piping type

Symbol	Pilot type		Built-in silencer	Piping direction
	Internal	External		
Nil	●	—	—	Side
S	●	—	●	
R	—	●	—	
V	●	—	—	Top
RV	—	●	—	
VP	●	—	●∗1	
B	●	—	—	Bottom
BS	●	—	●	
BR	—	●	—	

∗1 For silencer (supply side) E port is plugged.
∗ "B" for the bottom-ported type can be selected for the SY5000/7000 series.

P, E port size (One-touch fittings)

Symbol		P, E port	SY3000	SY5000	SY7000	Note
C8		ø8	●	—	—	Side/Bottom/ Top ported Metric size
C10		ø10	—	●	—	
C12		ø12	—	—	●	
N9		ø5/16"	●	—	—	Side/Bottom/ Top ported Inch size
N11		ø3/8"	—	●	—	
N13		ø1/2"	—	—	●	
L8	Upward elbow	ø8	●	—	—	Side ported Metric size
L10		ø10	—	●	—	
L12		ø12	—	—	●	
LN9		ø5/16"	●	—	—	Side ported Inch size
LN11		ø3/8"	—	●	—	
LN13		ø1/2"	—	—	●	
B8	Downward elbow	ø8	●	—	—	Side ported Metric size
B10		ø10	—	●	—	
B12		ø12	—	—	●	
BN9		ø5/16"	●	—	—	Side ported Inch size
BN11		ø3/8"	—	●	—	
BN13		ø1/2"	—	—	●	
00∗1		Plug	●	●	●	P/E port entry on one side or Top ported
00U∗2		Plug	●	●	●	

∗1 It can be selected only if no symbol or "S" or "V" or "B" is selected for the pilot and the piping.
∗2 "00U" has an inch size locking bracket.

SUP/EXH block assembly (D side) accessories and the number of accessories

Accessories	SY3000	SY5000 SY7000
ⓐ **Tension bolt**	None∗1	3 pcs.

∗1 Since the nuts are embedded in the SUP/EXH block

② D-sub connector block assembly <IP67>

Part no.	Connector direction	Locking bracket
SY30M-14-9A1	Top	Metric size
SY30M-14-9A2	Side	
SY30M-14-9A1U	Top	Inch size
SY30M-14-9A2U	Side	

③ Clamp bracket assembly

Series	Part no.
SY3000	SY30M-15-1A
SY5000/7000	SY50M-15-1A

∗ Part number is for one assembly.

Wiring

Terminal Block Box (Spring Type)

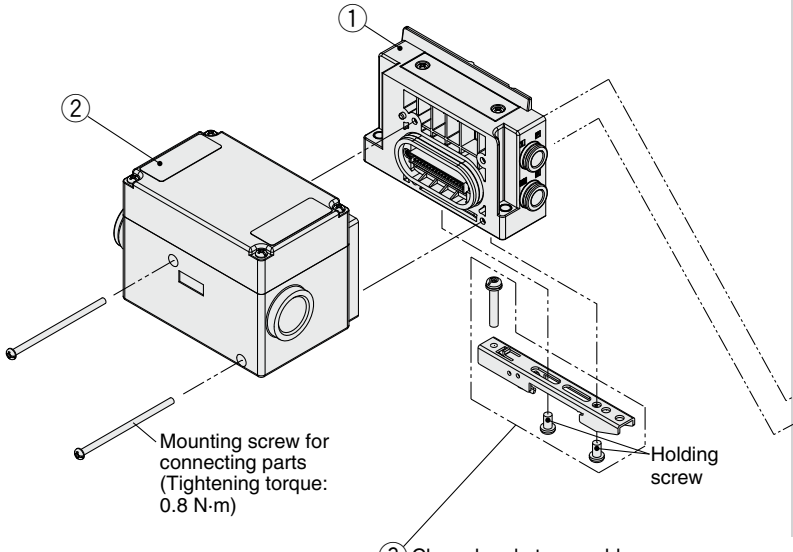

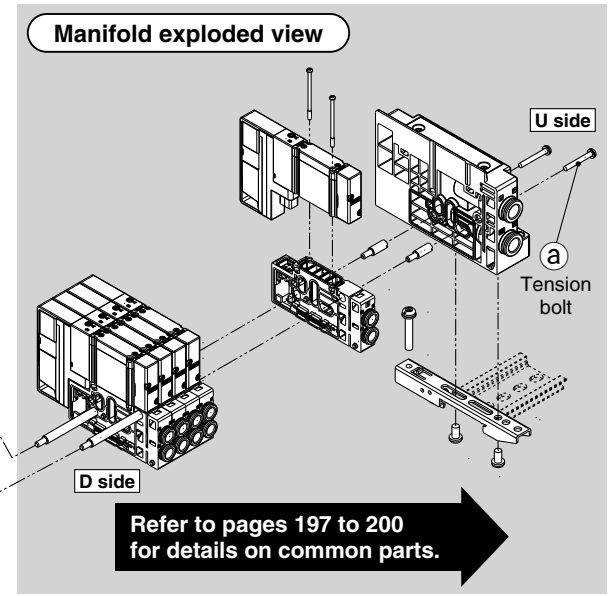

③ Clamp bracket assembly
It is mounted only for the DIN rail mounting type.
The holding screws of the clamp bracket is tightened at two points.
(Tightening torque of holding screw: 1.4 N·m)

Manifold Parts Nos.

① SUP/EXH block assembly

SY 3 0M−1−1A □ − C8 − □

Series

3	SY3000
5	SY5000
7	SY7000

Pilot, Silencer/Piping type

Symbol	Pilot type		Built-in silencer	Piping direction
	Internal	External		
Nil	●	—	—	Side
S	●	—	●	
R	—	●	—	
V	●	—	—	Top
RV	—	●	—	
VP	●	—	●*1	
B	●	—	—	Bottom
BS	●	—	●	
BR	—	●	—	

*1 For silencer (supply side) E port is plugged.
* "B" for the bottom-ported type can be selected for the SY5000/7000 series.

Mounting

Nil	Direct mounting
D0	DIN rail mounting (Without DIN rail)

* For the bottom-ported type, the symbol is nil.

P, E port size (One-touch fittings)

Symbol	P, E port		SY3000	SY5000	SY7000	Note
C8	ø8		●	—	—	Side/Bottom/ Top ported Metric size
C10	ø10		—	●	—	
C12	ø12		—	—	●	
N9	ø5/16"		●	—	—	Side/Bottom/ Top ported Inch size
N11	ø3/8"		—	●	—	
N13	ø1/2"		—	—	●	
L8	Upward elbow	ø8	●	—	—	Side ported Metric size
L10		ø10	—	●	—	
L12		ø12	—	—	●	
LN9		ø5/16"	●	—	—	Side ported Inch size
LN11		ø3/8"	—	●	—	
LN13		ø1/2"	—	—	●	
B8	Downward elbow	ø8	●	—	—	Side ported Metric size
B10		ø10	—	●	—	
B12		ø12	—	—	●	
BN9		ø5/16"	●	—	—	Side ported Inch size
BN11		ø3/8"	—	●	—	
BN13		ø1/2"	—	—	●	
00[*1]	Plug		●	●	●	P/E port entry on one side or Top ported

*1 It can be selected only if no symbol or "S" or "V" or "B" is selected for the pilot and the piping.

SUP/EXH block assembly (D side) accessories and the number of accessories

Accessories	SY3000	SY5000 SY7000
ⓐ **Tension bolt**	None*1	3 pcs.

*1 Since the nuts are embedded in the SUP/EXH block

② Terminal block assembly

SY30M−130−1A

③ Clamp bracket assembly

Series	Part no.
SY3000	SY30M-15-1A
SY5000/7000	SY50M-15-1A

* Part number is for one assembly.

Wiring

Terminal Block Box

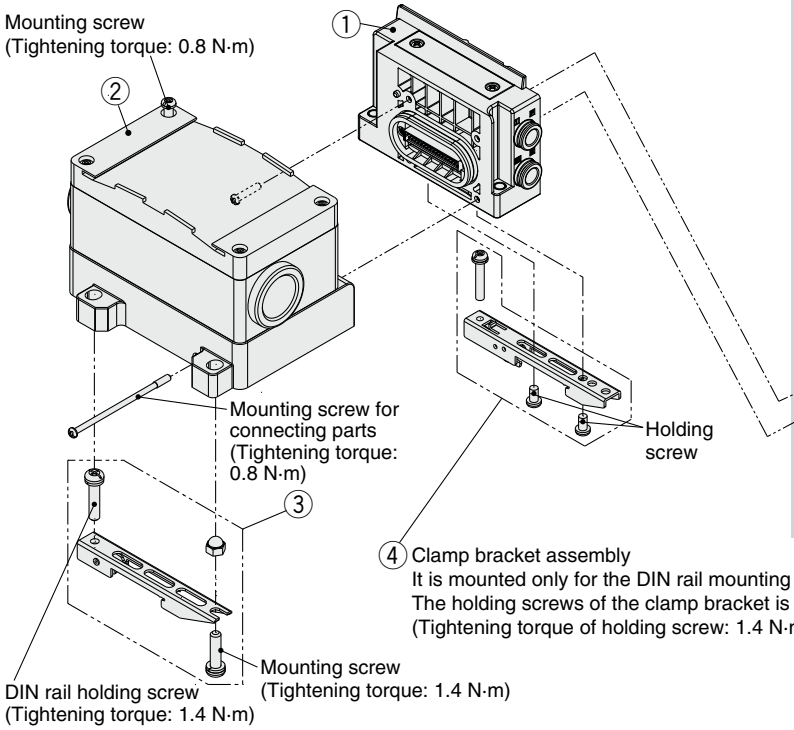

Manifold exploded view

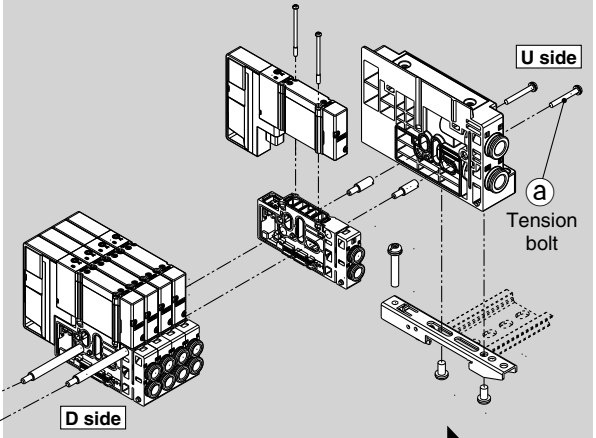

Refer to pages 197 to 200 for details on common parts.

Manifold Parts Nos.

① SUP/EXH block assembly

SY 3 0M−1−1A □ − C8 − □

Series

3	SY3000
5	SY5000
7	SY7000

Pilot, Silencer/Piping type

Symbol	Pilot type		Built-in silencer	Piping direction
	Internal	External		
Nil	●	—	—	Side
S	●	—	●	
R	—	●	—	
V	●	—	—	Top
RV	—	●	—	
VP	●	—	●*1	
B	●	—	—	Bottom
BS	●	—	●	
BR	—	●	—	

*1 For silencer (supply side) E port is plugged.

* "B" for the bottom-ported type can be selected for the SY5000/7000 series.

Mounting

Nil	Direct mounting
D0	DIN rail mounting (Without DIN rail)

* For the bottom-ported type, the symbol is nil.

P, E port size (One-touch fittings)

Symbol		P, E port	SY3000	SY5000	SY7000	Note
C8		ø8	●	—	—	Side/Bottom/ Top ported Metric size
C10		ø10	—	●	—	
C12		ø12	—	—	●	
N9		ø5/16"	●	—	—	Side/Bottom/ Top ported Inch size
N11		ø3/8"	—	●	—	
N13		ø1/2"	—	—	●	
L8	Upward elbow	ø8	●	—	—	Side ported Metric size
L10		ø10	—	●	—	
L12		ø12	—	—	●	
LN9		ø5/16"	●	—	—	Side ported Inch size
LN11		ø3/8"	—	●	—	
LN13		ø1/2"	—	—	●	
B8	Downward elbow	ø8	●	—	—	Side ported Metric size
B10		ø10	—	●	—	
B12		ø12	—	—	●	
BN9		ø5/16"	●	—	—	Side ported Inch size
BN11		ø3/8"	—	●	—	
BN13		ø1/2"	—	—	●	
00[*1]		Plug	●	●	●	P/E port entry on one side or Top ported

*1 It can be selected only if no symbol or "S" or "V" or "B" is selected for the pilot and the piping.

SUP/EXH block assembly (D side) accessories and the number of accessories

Accessories	SY3000	SY5000 SY7000
ⓐ **Tension bolt**	None*1	3 pcs.

*1 Since the nuts are embedded in the SUP/EXH block

② Terminal block box housing assembly

VVQC1000−T0−1

③ Clamp bracket assembly for terminal block box

SY30M−15−4A

* Part number is for one assembly.

④ Clamp bracket assembly

Series	Part no.
SY3000	SY30M-15-1A
SY5000/7000	SY50M-15-1A

* Part number is for one assembly.

Wiring

Lead Wire

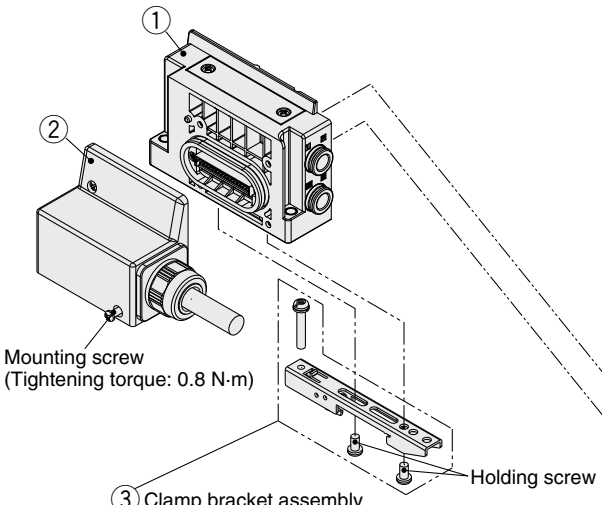

Manifold exploded view

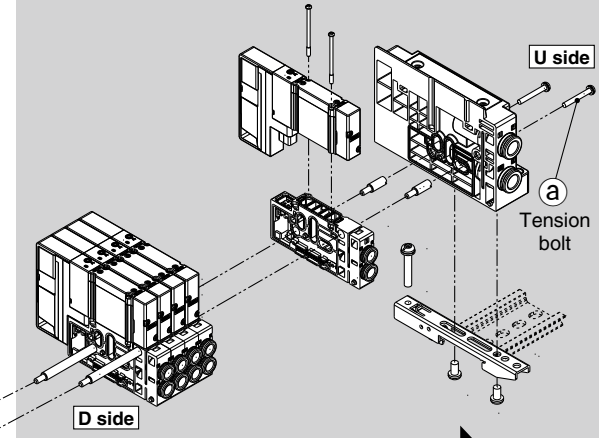

Refer to pages 197 to 200 for details on common parts.

Manifold Parts Nos.

① SUP/EXH block assembly

SY 3 0M − 1 − 1A □ − C8 − □

Series

3	SY3000
5	SY5000
7	SY7000

Pilot, Silencer/Piping type

Symbol	Pilot type		Built-in silencer	Piping direction
	Internal	External		
Nil	●	—	—	Side
S	●	—	●	
R	—	●	—	
V	●	—	—	Top
RV	—	●	—	
VP	●	—	●*1	
B	●	—	—	Bottom
BS	●	—	●	
BR	—	●	—	

*1 For silencer (supply side) E port is plugged.
* "B" for the bottom-ported type can be selected for the SY5000/7000 series.

Mounting

Nil	Direct mounting
D0	DIN rail mounting (Without DIN rail)

* For the bottom-ported type, the symbol is nil.

P, E port size (One-touch fittings)

Symbol	P, E port		SY3000	SY5000	SY7000	Note
C8	ø8		●	—	—	Side/Bottom/ Top ported Metric size
C10	ø10		—	●	—	
C12	ø12		—	—	●	
N9	ø5/16"		●	—	—	Side/Bottom/ Top ported Inch size
N11	ø3/8"		—	●	—	
N13	ø1/2"		—	—	●	
L8	ø8	Upward elbow	●	—	—	Side ported Metric size
L10	ø10		—	●	—	
L12	ø12		—	—	●	
LN9	ø5/16"		●	—	—	Side ported Inch size
LN11	ø3/8"		—	●	—	
LN13	ø1/2"		—	—	●	
B8	ø8	Downward elbow	●	—	—	Side ported Metric size
B10	ø10		—	●	—	
B12	ø12		—	—	●	
BN9	ø5/16"		●	—	—	Side ported Inch size
BN11	ø3/8"		—	●	—	
BN13	ø1/2"		—	—	●	
00[*1]	Plug		●	●	●	P/E port entry on one side or Top ported

*1 It can be selected only if no symbol or "S" or "V" or "B" is selected for the pilot and the piping.

SUP/EXH block assembly (D side) accessories and the number of accessories

Accessories	SY3000	SY5000 SY7000
ⓐ **Tension bolt**	None*1	3 pcs.

*1 Since the nuts are embedded in the SUP/EXH block

② Lead wire connector block assembly

SY30M − 14 − 4A − □ − □

Number of cores

1	34
2	17
3	9

Lead wire length [m]

1	0.6
2	1.5
3	3

③ Clamp bracket assembly

Series	Part no.
SY3000	SY30M-15-1A
SY5000/7000	SY50M-15-1A

* Part number is for one assembly.

Wiring

Circular Connector

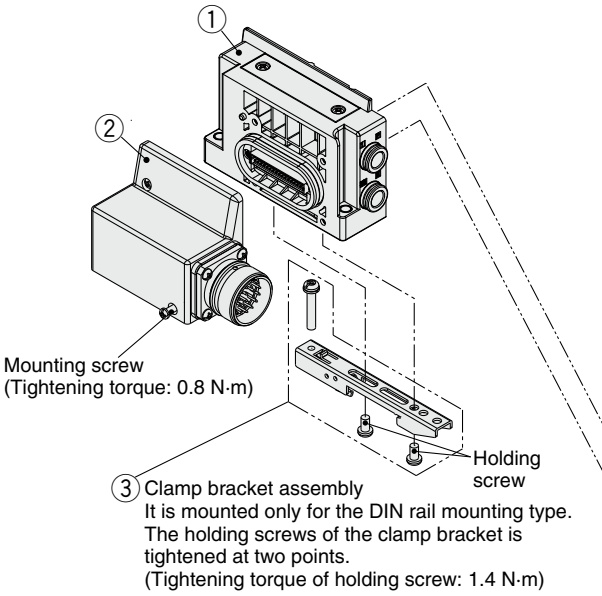

Manifold exploded view

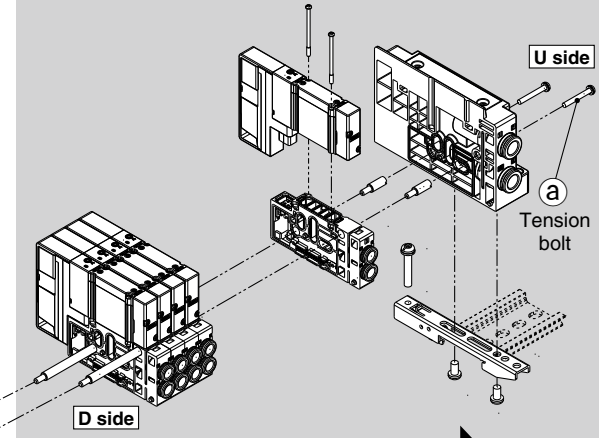

Refer to pages 197 to 200 for details on common parts.

Manifold Parts Nos.

① SUP/EXH block assembly

SY 3 0M−1−1A □ − C8 − □

Series

3	SY3000
5	SY5000
7	SY7000

Pilot, Silencer/Piping type

Symbol	Pilot type		Built-in silencer	Piping direction
	Internal	External		
Nil	●	—	—	Side
S	●	—	●	
R	—	●	—	
V	●	—	—	Top
RV	—	●	—	
VP	●	—	●*1	
B	●	—	—	Bottom
BS	●	—	●	
BR	—	●	—	

*1 For silencer (supply side) E port is plugged.
* "B" for the bottom-ported type can be selected for the SY5000/7000 series.

Mounting

Nil	Direct mounting
D0	DIN rail mounting (Without DIN rail)

* For the bottom-ported type, the symbol is nil.

P, E port size (One-touch fittings)

Symbol		P, E port	SY3000	SY5000	SY7000	Note
C8		ø8	●	—	—	Side/Bottom/ Top ported Metric size
C10		ø10	—	●	—	
C12		ø12	—	—	●	
N9		ø5/16"	●	—	—	Side/Bottom/ Top ported Inch size
N11		ø3/8"	—	●	—	
N13		ø1/2"	—	—	●	
L8	Upward elbow	ø8	●	—	—	Side ported Metric size
L10		ø10	—	●	—	
L12		ø12	—	—	●	
LN9		ø5/16"	●	—	—	Side ported Inch size
LN11		ø3/8"	—	●	—	
LN13		ø1/2"	—	—	●	
B8	Downward elbow	ø8	●	—	—	Side ported Metric size
B10		ø10	—	●	—	
B12		ø12	—	—	●	
BN9		ø5/16"	●	—	—	Side ported Inch size
BN11		ø3/8"	—	●	—	
BN13		ø1/2"	—	—	●	
00*1		Plug	●	●	●	P/E port entry on one side or Top ported

*1 It can be selected only if no symbol or "S" or "V" or "B" is selected for the pilot and the piping.

SUP/EXH block assembly (D side) accessories and the number of accessories

Accessories	SY3000	SY5000 SY7000
ⓐ **Tension bolt**	None*1	3 pcs.

*1 Since the nuts are embedded in the SUP/EXH block

② Circular connector block assembly

SY30M−14−5A

* 26 pins

③ Clamp bracket assembly

Series	Part no.
SY3000	SY30M-15-1A
SY5000/7000	SY50M-15-1A

* Part number is for one assembly.

Wiring

EX500 Gateway Decentralized System 2 (128 Points)

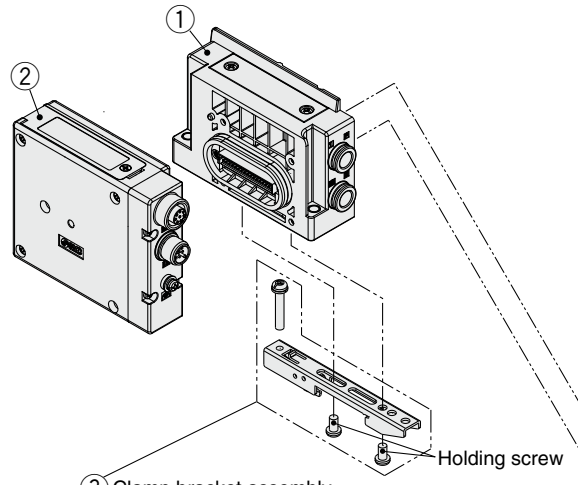

Manifold exploded view

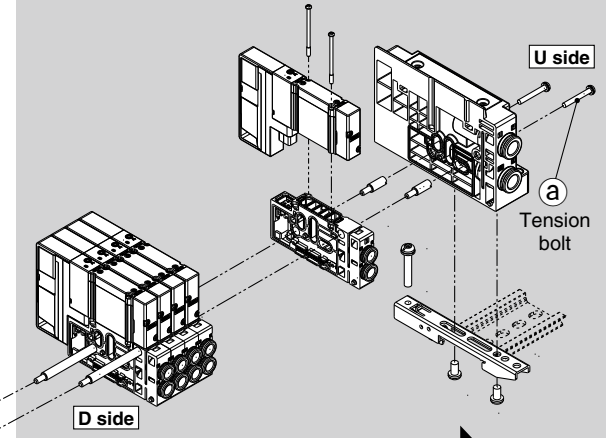

Refer to pages 197 to 200 for details on common parts.

Manifold Parts Nos.

① SUP/EXH block assembly

SY 3 0M−1−1A □ − C8 − □

Series

3	SY3000
5	SY5000
7	SY7000

Pilot, Silencer/Piping type

Symbol	Pilot type		Built-in silencer	Piping direction
	Internal	External		
Nil	●	—	—	Side
S	●	—	●	
R	—	●	—	
V	●	—	—	Top
RV	—	●	—	
VP	●	—	●*1	
B	●	—	—	Bottom
BS	●	—	●	
BR	—	●	—	

*1 For silencer (supply side) E port is plugged.
* "B" for the bottom-ported type can be selected for the SY5000/7000 series.

Mounting

Nil	Direct mounting
D0	DIN rail mounting (Without DIN rail)

* For the bottom-ported type, the symbol is nil.

P, E port size (One-touch fittings)

Symbol	P, E port		SY3000	SY5000	SY7000	Note
C8	ø8		●	—	—	Side/Bottom/ Top ported Metric size
C10	ø10		—	●	—	
C12	ø12		—	—	●	
N9	ø5/16"		●	—	—	Side/Bottom/ Top ported Inch size
N11	ø3/8"		—	●	—	
N13	ø1/2"		—	—	●	
L8	ø8	Upward elbow	●	—	—	Side ported Metric size
L10	ø10		—	●	—	
L12	ø12		—	—	●	
LN9	ø5/16"		●	—	—	Side ported Inch size
LN11	ø3/8"		—	●	—	
LN13	ø1/2"		—	—	●	
B8	ø8	Downward elbow	●	—	—	Side ported Metric size
B10	ø10		—	●	—	
B12	ø12		—	—	●	
BN9	ø5/16"		●	—	—	Side ported Inch size
BN11	ø3/8"		—	●	—	
BN13	ø1/2"		—	—	●	
00[*1]	Plug		●	●	●	P/E port entry on one side or Top ported

*1 It can be selected only if no symbol or "S" or "V" or "B" is selected for the pilot and the piping.

SUP/EXH block assembly (D side) accessories and the number of accessories

Accessories	SY3000	SY5000 SY7000
ⓐ **Tension bolt**	None*1	3 pcs.

*1 Since the nuts are embedded in the SUP/EXH block

② EX500 SI unit

EX500−S103

③ Clamp bracket assembly

Series	Part no.
SY3000	SY30M-15-1A
SY5000/7000	SY50M-15-1A

* Part number is for one assembly.

Wiring

EX500 Gateway Decentralized System (64 Points)

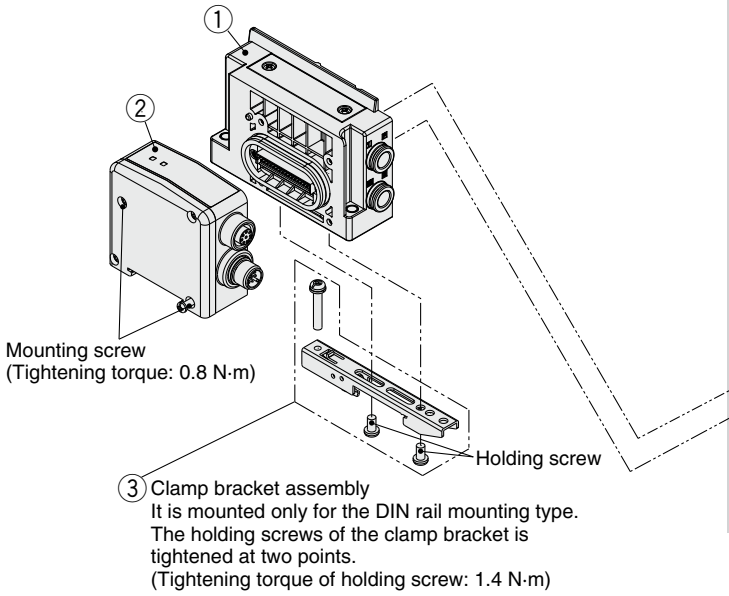

Manifold exploded view

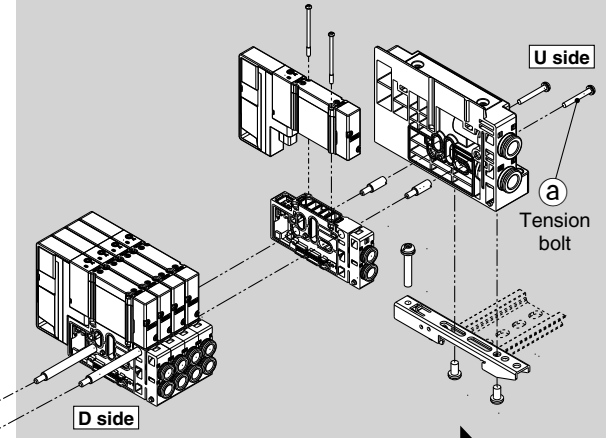

Refer to pages 197 to 200 for details on common parts.

Manifold Parts Nos.

① SUP/EXH block assembly

SY 3 0M − 1 − 1A □ − C8 − □

Series

3	SY3000
5	SY5000
7	SY7000

Pilot, Silencer/Piping type

Symbol	Pilot type		Built-in silencer	Piping direction
	Internal	External		
Nil	●	—	—	Side
S	●	—	●	
R	—	●	—	
V	●	—	—	Top
RV	—	●	—	
VP	●	—	●*1	
B	●	—	—	Bottom
BS	●	—	●	
BR	—	●	—	

*1 For silencer (supply side) E port is plugged.
* "B" for the bottom-ported type can be selected for the SY5000/7000 series.

Mounting

Nil	Direct mounting
D0	DIN rail mounting (Without DIN rail)

* For the bottom-ported type, the symbol is nil.

P, E port size (One-touch fittings)

Symbol	P, E port		SY3000	SY5000	SY7000	Note
C8	ø8		●	—	—	Side/Bottom/ Top ported Metric size
C10	ø10		—	●	—	
C12	ø12		—	—	●	
N9	ø5/16"		●	—	—	Side/Bottom/ Top ported Inch size
N11	ø3/8"		—	●	—	
N13	ø1/2"		—	—	●	
L8	ø8	Upward elbow	●	—	—	Side ported Metric size
L10	ø10		—	●	—	
L12	ø12		—	—	●	
LN9	ø5/16"		●	—	—	Side ported Inch size
LN11	ø3/8"		—	●	—	
LN13	ø1/2"		—	—	●	
B8	ø8	Downward elbow	●	—	—	Side ported Metric size
B10	ø10		—	●	—	
B12	ø12		—	—	●	
BN9	ø5/16"		●	—	—	Side ported Inch size
BN11	ø3/8"		—	●	—	
BN13	ø1/2"		—	—	●	
00[*1]	Plug		●	●	●	P/E port entry on one side or Top ported

*1 It can be selected only if no symbol or "S" or "V" or "B" is selected for the pilot and the piping.

SUP/EXH block assembly (D side) accessories and the number of accessories

Accessories	SY3000	SY5000 SY7000
ⓐ **Tension bolt**	None*1	3 pcs.

*1 Since the nuts are embedded in the SUP/EXH block

② EX500 SI unit

EX500 − Q 0 01

Output specifications

0	NPN (Positive common)
1	PNP (Negative common)

③ Clamp bracket assembly

Series	Part no.
SY3000	SY30M-15-1A
SY5000/7000	SY50M-15-1A

* Part number is for one assembly.

Wiring

EX600

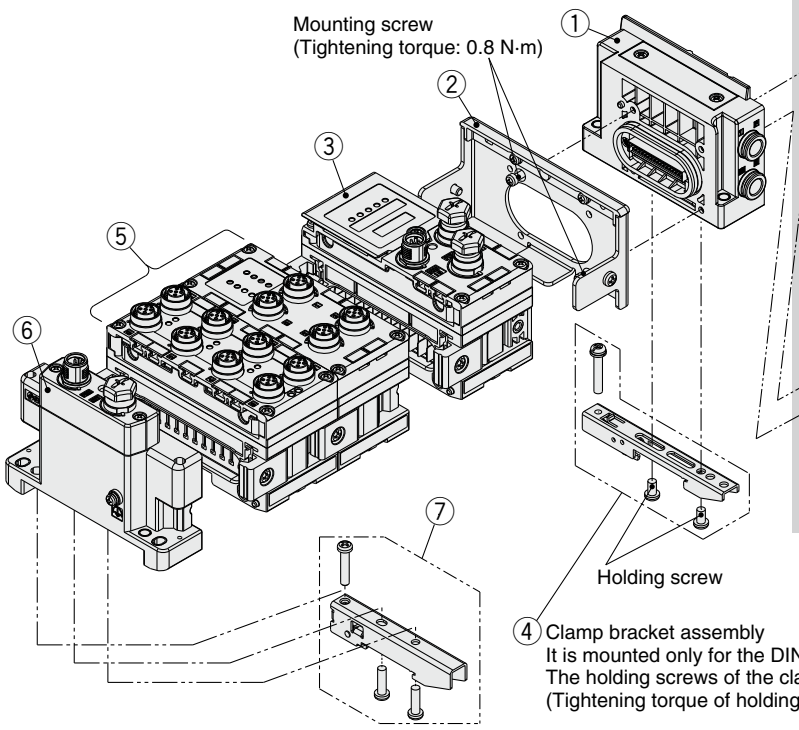

Manifold exploded view

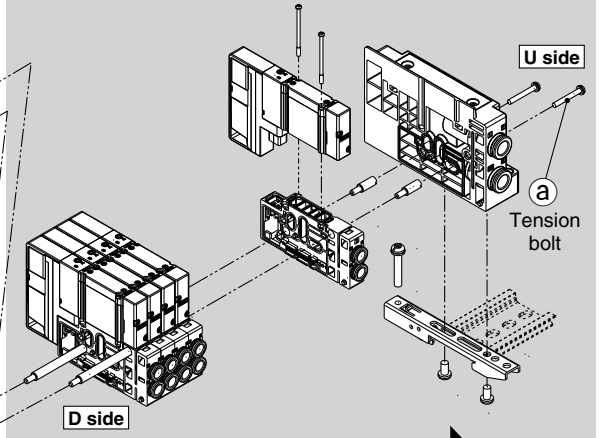

Refer to pages 197 to 200 for details on common parts.

④ Clamp bracket assembly
It is mounted only for the DIN rail mounting type.
The holding screws of the clamp bracket is tightened at two points.
(Tightening torque of holding screw: 1.4 N·m)

Manifold Parts Nos.

① SUP/EXH block assembly

SY 3 0M − 1 − 1A □ − C8 − □

Series

3	SY3000
5	SY5000
7	SY7000

Mounting

Nil	Direct mounting
D0	DIN rail mounting (Without DIN rail)

∗ For the bottom-ported type, the symbol is nil.

Pilot, Silencer/Piping type

Symbol	Pilot type		Built-in silencer	Piping direction
	Internal	External		
Nil	●	—	—	Side
S	●	—	●	
R	—	●	—	
V	●	—	—	Top
RV	—	●	—	
VP	●	—	●∗1	
B	●	—	—	Bottom
BS	●	—	●	
BR	—	●	—	

∗1 For silencer (supply side) E port is plugged.
∗ "B" for the bottom-ported type can be selected for the SY5000/7000 series.

P, E port size (One-touch fittings)

Symbol	P, E port		SY3000	SY5000	SY7000	Note
C8	ø8		●	—	—	Side/Bottom/ Top ported Metric size
C10	ø10		—	●	—	
C12	ø12		—	—	●	
N9	ø5/16"		●	—	—	Side/Bottom/ Top ported Inch size
N11	ø3/8"		—	●	—	
N13	ø1/2"		—	—	●	
L8	ø8	Upward elbow	●	—	—	Side ported Metric size
L10	ø10		—	●	—	
L12	ø12		—	—	●	
LN9	ø5/16"		●	—	—	Side ported Inch size
LN11	ø3/8"		—	●	—	
LN13	ø1/2"		—	—	●	
B8	ø8	Downward elbow	●	—	—	Side ported Metric size
B10	ø10		—	●	—	
B12	ø12		—	—	●	
BN9	ø5/16"		●	—	—	Side ported Inch size
BN11	ø3/8"		—	●	—	
BN13	ø1/2"		—	—	●	
00∗1	Plug		●	●	●	P/E port entry on one side or Top ported

∗1 It can be selected only if no symbol or "S" or "V" or "B" is selected for the pilot and the piping.

SUP/EXH block assembly (D side) accessories and the number of accessories

Accessories	SY3000	SY5000 SY7000
ⓐ **Tension bolt**	None∗1	3 pcs.

∗1 Since the nuts are embedded in the SUP/EXH block

Note that EX600-SEC1 and EX600-SEC2 EtherCAT compatible SI units are to be discontinued as of October 2022.

Manifold Parts Nos.

② Valve plate

EX600−ZMV2

∗ With mounting screws
(2 pcs. of M4 x 6 and 2 pcs. of M3 x 8)

③ EX600 SI unit

EX600−S PR 1 □

Protocol

Symbol	Description
PR	PROFIBUS DP
DN	DeviceNet®
MJ	CC-Link
EN	EtherNet/IP™
EC	EtherCAT
PN	PROFINET

Version

Symbol	Description
Nil	When MJ, EN, EC, or PN is selected
A	When PR or DN is selected

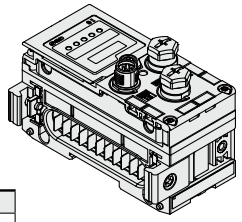

Output type

Symbol	Description	Condition
1	PNP (Negative common)	Can be selected by all protocols
2	NPN (Positive common)	Can be selected by all protocols
3	PNP (Negative common)	Can be selected in the case of EN/PN∗1
4	NPN (Positive common)	Can be selected in the case of EN/PN∗1

∗1 For EN: Dual port EtherNet/IP™ product
For PN: IO-Link unit compatible product

③ EX600 SI unit (Wireless compatible)

EX600−W EN 1

Output type

Symbol	Description
1	PNP (Negative common)
2	NPN (Positive common)

Protocol

Symbol	SI unit type	Description
EN	Wireless base module	EtherNet/IP™∗1
PN	Wireless base module	PROFINET∗1
SV	Wireless remote module	—∗1

∗1 The wireless system is suitable for use only in a country where it is in accordance with the Radio Act and regulations of that country.

④ Clamp bracket assembly

Series	Part no.
SY3000	SY30M-15-1A
SY5000/7000	SY50M-15-1A

∗ Part number is for one assembly.

Manifold Parts Nos.

⑤ EX600 digital input unit

EX600−DX P B

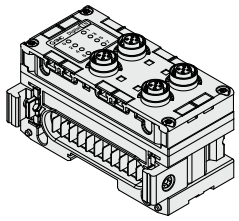

Input type

Symbol	Description
P	PNP
N	NPN

Number of inputs, open circuit detection, and connector

Symbol	Number of inputs	Open circuit detection	Connector
B	8	No	M12 connector (5 pins) 4 pcs.
C	8	No	M8 connector (3 pins) 8 pcs.
C1	8	Yes	M8 connector (3 pins) 8 pcs.
D	16	No	M12 connector (5 pins) 8 pcs.
E	16	No	D-sub connector (25 pins)
F	16	No	Spring type terminal block (32 pins)

⑤ EX600 digital output unit

EX600−DY P B

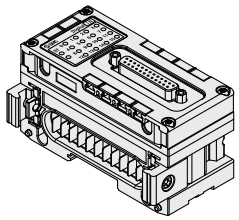

Output type

Symbol	Description
P	PNP
N	NPN

Number of outputs and connector

Symbol	Number of outputs	Connector
B	8	M12 connector (5 pins) 4 pcs.
E	16	D-sub connector (25 pins)
F	16	Spring type terminal block (32 pins)

⑤ EX600 digital input/output unit

EX600−DM P E

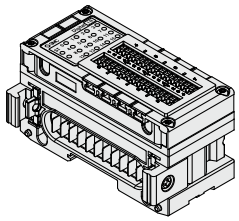

Input/Output type

Symbol	Description
P	PNP
N	NPN

Number of inputs/outputs and connector

Symbol	Number of inputs	Number of outputs	Connector
E	8	8	D-sub connector (25 pins)
F	8	8	Spring type terminal block (32 pins)

⑤ EX600 analog input/output unit

EX600−AX A

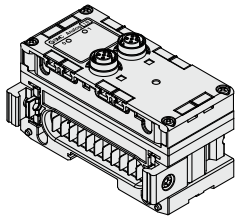

Analog input/output

Symbol	Description
AX	Analog input
AY	Analog output

Number of input channels and connector

Symbol	Number of input channels	Connector
A	2 channels	M12 connector (5 pins) 2 pcs.

⑤ EX600 analog input/output unit

EX600−AM B

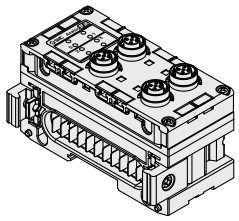

Analog input/output

Number of input/output channels and connector

Symbol	Number of input channels	Number of output channels	Connector
B	2 channels	2 channels	M12 connector (5 pins) 4 pcs.

⑥ EX600 IO-Link unit

EX600−L A B 1

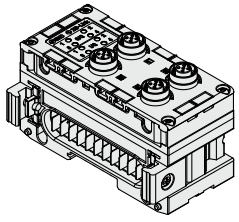

Port specification

Symbol	Description
A	Port class A
B	Port class B

Number of ports and connector

Symbol	Number of ports	Connector
B	4 ports	M12 connector (5 pins) 4 pcs.

⚠ Caution

The applicable SI unit models are the PROFINET compatible EX600-SPN3 and EX600-SPN4. While there is also an EtherNet/IP™ compatible made-to-order specification, the EX600-SEN3-X80, the manifold will also need to be made to order in this case.

⑦ EX600 end plate

EX600−ED 2 −

Power connector

Symbol	Connector
2	M12 power supply connector, B-coded
3	7/8 inch power supply connector
4	M12 power supply connector IN/OUT, A-coded, Pin arrangement 1
5	M12 power supply connector IN/OUT, A-coded, Pin arrangement 2

∗ The pin layout for the “4” and “5” pin connectors is different.

Mounting

Symbol	Description
Nil	Without DIN rail mounting bracket
3	With DIN rail mounting bracket

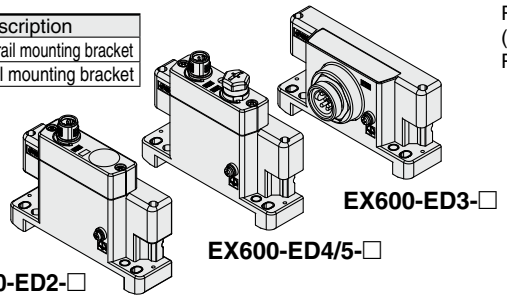

EX600-ED3-□

EX600-ED4/5-□

EX600-ED2-□

⑧ Clamp bracket for EX600

EX600−ZMA3

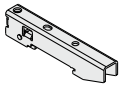

Enclosed parts

Round head screw with washer (M4 x 20) 1 pc.
P-tight screw (4 x 14) 2 pcs.

Wiring

EX245

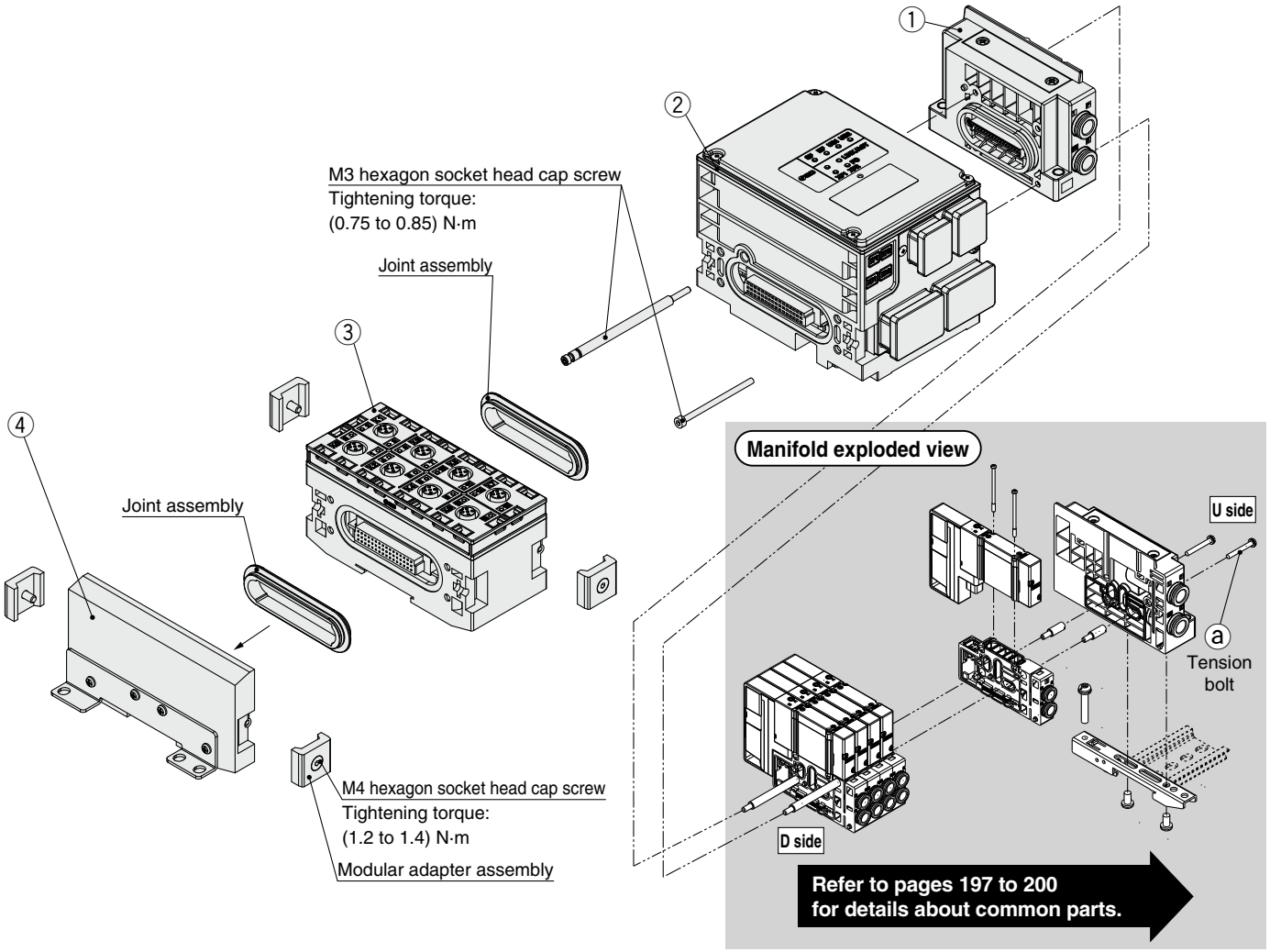

Manifold Parts No.

① SUP/EXH block assembly

SY 3 0M−1−1A □ − C8

Series

3	SY3000
5	SY5000
7	SY7000

Pilot, Silencer/Piping type

Symbol	Pilot type		Built-in silencer	Piping direction
	Internal	External		
Nil	●	—	—	Side
S	●	—	●	
R	—	●	—	
V	●	—	—	Top
RV	—	●	—	
VP	●	—	●∗1	
B	●	—	—	Bottom
BS	●	—	●	
BR	—	●	—	

∗1: For silencer (supply side). E port is plugged.

∗: "B" for bottom ported can be selected for the SY5000/7000 series.

P, E port size (One-touch fittings)

Symbol	P, E port		SY3000	SY5000	SY7000	Note
C8	ø8		●	—	—	Side/Bottom/ Top ported Metric size
C10	ø10		—	●	—	
C12	ø12		—	—	●	
N9	ø5/16"		●	—	—	Side/Bottom/ Top ported Inch size
N11	ø3/8"		—	●	—	
N13	ø1/2"		—	—	●	
L8	ø8	Upward elbow	●	—	—	Side ported Metric size
L10	ø10		—	●	—	
L12	ø12		—	—	●	
LN9	ø5/16"		●	—	—	Side ported Inch size
LN11	ø3/8"		—	●	—	
LN13	ø1/2"		—	—	●	
B8	ø8	Downward elbow	●	—	—	Side ported Metric size
B10	ø10		—	●	—	
B12	ø12		—	—	●	
BN9	ø5/16"		●	—	—	Side ported Inch size
BN11	ø3/8"		—	●	—	
BN13	ø1/2"		—	—	●	
00∗1	Plug		●	●	●	P/E port entry on one side or Top ported

∗1: It can be selected only if no symbol or "S" or "V" or "B" is selected for the pilot and the piping.

SUP/EXH block assembly (D side) accessories and the number of accessories

Accessories	SY3000	SY5000/7000
ⓐ**Tension bolt**	None∗1	3 pcs.

∗1: Since the nuts are embedded in the SUP/EXH block.

Manifold Parts No.

② EX245 SI Unit

EX245 − S PN 1A

- S: SI unit
- PN: PROFINET
- 1A: Connector type

Symbol	Communication connector	Power supply connector
1A	Push Pull connector (SCRJ): 2 pcs.	Push Pull connector (24 V): 2 pcs.
2A	Push Pull connector (RJ45): 2 pcs.	Push Pull connector (24 V): 2 pcs.
3A	M12 connector (4-pin, Socket, D-coded): 2 pcs.	7/8 inch connector (5-pin, Plug): 1 pc. 7/8 inch connector (5-pin, Socket): 1 pc.

③ EX245 Digital Input Module

EX245 − DX1

- DX1: Digital input module specification

DX1	Digital input (16 inputs)

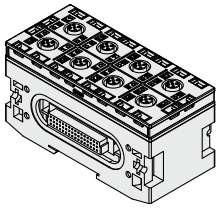

③ EX245 Digital Output Module

EX245 − DY1

- DY1: Digital output module specification

DY1	Digital output (8 outputs)

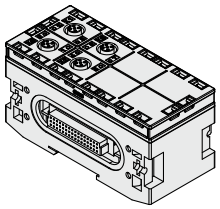

③ EX245 IO-Link module

EX245 − L A 1

- A: Port specification

Symbol	Description
A	Port class A
B	Port class B

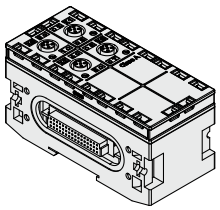

⚠ Caution
The only available SI unit part number is "EX245-SPN□A" (PROFINET compatible).

④ EX245 End Plate

EX245 − EA2 − 3

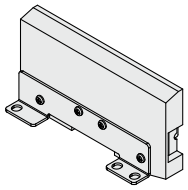

Wiring

EX250

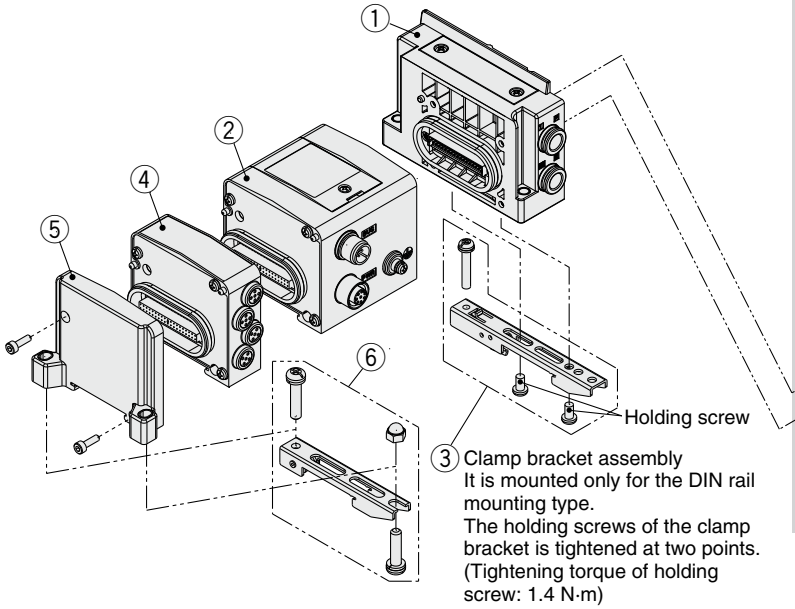

Manifold exploded view

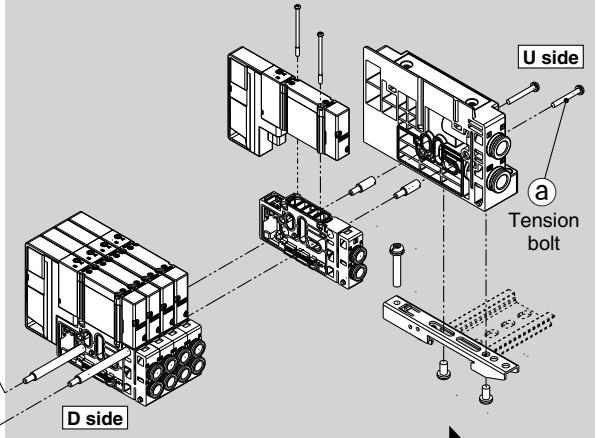

Refer to pages 197 to 200 for details on common parts.

Manifold Parts Nos.

① SUP/EXH block assembly

SY 3 0M − 1 − 1A □ − C8 − □

Mounting

Nil	Direct mounting
D0	DIN rail mounting (Without DIN rail)

∗ For the bottom-ported type, the symbol is nil.

Series

3	SY3000
5	SY5000
7	SY7000

Pilot, Silencer/Piping type

Symbol	Pilot type		Built-in silencer	Piping direction
	Internal	External		
Nil	●	—	—	Side
S	●	—	●	
R	—	●	—	
V	●	—	—	Top
RV	—	●	—	
VP	●	—	●∗1	
B	●	—	—	Bottom
BS	●	—	●	
BR	—	●	—	

∗1 For silencer (supply side). E port is plugged.
∗ "B" for the bottom-ported type can be selected for the SY5000/7000 series.

P, E port size (One-touch fittings)

Symbol		P, E port	SY3000	SY5000	SY7000	Note
C8		ø8	●	—	—	Side/Bottom/ Top ported Metric size
C10		ø10	—	●	—	
C12		ø12	—	—	●	
N9		ø5/16"	●	—	—	Side/Bottom/ Top ported Inch size
N11		ø3/8"	—	●	—	
N13		ø1/2"	—	—	●	
L8	Upward elbow	ø8	●	—	—	Side ported Metric size
L10		ø10	—	●	—	
L12		ø12	—	—	●	
LN9		ø5/16"	●	—	—	Side ported Inch size
LN11		ø3/8"	—	●	—	
LN13		ø1/2"	—	—	●	
B8	Downward elbow	ø8	●	—	—	Side ported Metric size
B10		ø10	—	●	—	
B12		ø12	—	—	●	
BN9		ø5/16"	●	—	—	Side ported Inch size
BN11		ø3/8"	—	●	—	
BN13		ø1/2"	—	—	●	
00∗1		Plug	●	●	●	P/E port entry on one side or Top ported

∗1 It can be selected only if no symbol or "S" or "V" or "B" is selected for the pilot and the piping.

SUP/EXH block assembly (D side) accessories and the number of accessories

Accessories	SY3000	SY5000 SY7000
ⓐ **Tension bolt**	None∗1	3 pcs.

∗1 Since the nuts are embedded in the SUP/EXH block

② EX250 SI unit

EX250 − S DN1

Note that the EX250-SPR1 PROFIBUS DP compatible SI unit is to be discontinued as of November 2022.

Communication protocol

DN1	DeviceNet® (Negative common)
PR1	PROFIBUS DP (Negative common)
AS3	AS-Interface (8 in/8 out, 31 slave modes, 2 isolated common type) (Negative common)
AS5	AS-Interface (4 in/4 out, 31 slave modes, 2 isolated common type) (Negative common)
AS7	AS-Interface (8 in/8 out, 31 slave modes, 1 common type) (Negative common)
AS9	AS-Interface (4 in/4 out, 31 slave modes, 1 common type) (Negative common)
CA1A	CANopen (Negative common)
EN1	EtherNet/IP™ (Negative common)

③ Clamp bracket assembly

Series	Part no.
SY3000	SY30M-15-1A
SY5000/7000	SY50M-15-1A

∗ Part number is for one assembly.

④ Input block

EX250 − IE 1

Block type

1	M12 connector, 2 inputs
2	M12 connector, 4 inputs
3	M8 connector, 4 inputs

⑤ EX250 end plate assembly

EX250 − EA1

∗ With mounting screws (2 pcs. of M3 x 10)

⑥ Clamp bracket assembly for EX250 SI unit

SY30M − 15 − 3A

∗ Part number is for one assembly.

Wiring

EX260

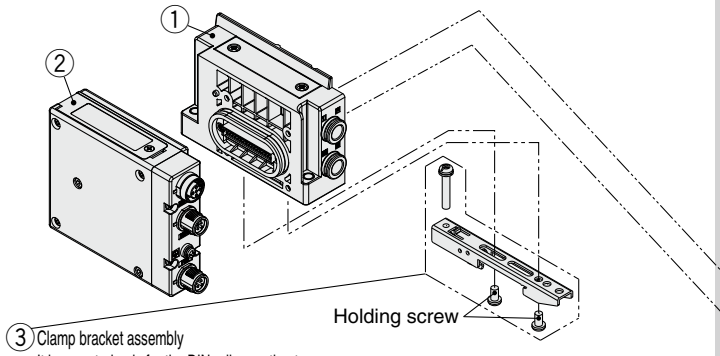

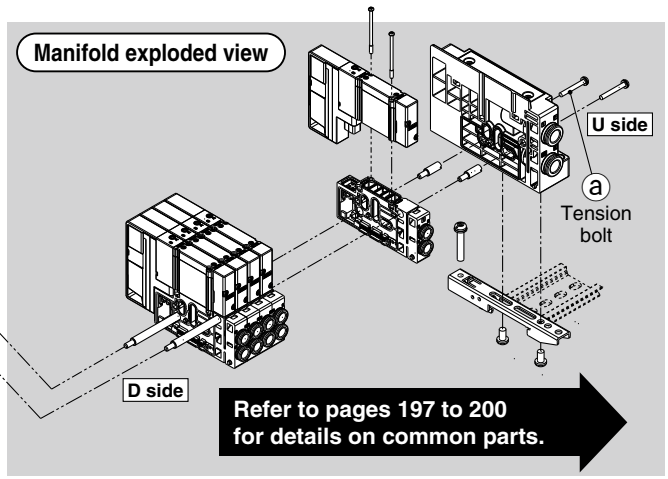

Refer to pages 197 to 200 for details on common parts.

Manifold Parts Nos.

① SUP/EXH block assembly

SY 3 0M−1−1A □ − C8 − □

Series

3	SY3000
5	SY5000
7	SY7000

Mounting

Nil	Direct mounting
D0	DIN rail mounting (Without DIN rail)

∗ For the bottom-ported type, the symbol is nil.

Pilot, Silencer/Piping type

Symbol	Pilot type		Built-in silencer	Piping direction
	Internal	External		
Nil	●	—	—	Side
S	●	—	●	
R	—	●	—	
V	●	—	—	Top
RV	—	●	—	
VP	●	—	●∗1	
B	●	—	—	Bottom
BS	●	—	●	
BR	—	●	—	

∗1 For silencer (supply side) E port is plugged.
∗ "B" for the bottom-ported type can be selected for the SY5000/7000 series.

P, E port size (One-touch fittings)

Symbol	P, E port	SY3000	SY5000	SY7000	Note
C8	ø8	●	—	—	Side/Bottom/ Top ported Metric size
C10	ø10	—	●	—	
C12	ø12	—	—	●	
N9	ø5/16"	●	—	—	Side/Bottom/ Top ported Inch size
N11	ø3/8"	—	●	—	
N13	ø1/2"	—	—	●	
L8	ø8	●	—	—	Side ported Metric size
L10	ø10	—	●	—	
L12	ø12	—	—	●	
LN9	ø5/16"	●	—	—	Side ported Inch size
LN11	ø3/8"	—	●	—	
LN13	ø1/2"	—	—	●	
B8	ø8	●	—	—	Side ported Metric size
B10	ø10	—	●	—	
B12	ø12	—	—	●	
BN9	ø5/16"	●	—	—	Side ported Inch size
BN11	ø3/8"	—	●	—	
BN13	ø1/2"	—	—	●	
00∗1	Plug	●	●	●	P/E port entry on one side or Top ported

(Upward elbow: L8, L10, L12, LN9, LN11, LN13; Downward elbow: B8, B10, B12, BN9, BN11, BN13)

∗1 It can be selected only if no symbol or "S" or "V" or "B" is selected for the pilot and the piping.

SUP/EXH block assembly (D side) accessories and the number of accessories

Accessories	SY3000	SY5000 SY7000
ⓐ **Tension bolt**	None∗1	3 pcs.

∗1 Since the nuts are embedded in the SUP/EXH block

② EX260 SI unit (Fieldbus and Industrial Ethernet)

EX260−S PR1

Communication protocol

Symbol	Protocol	Number of outputs	SI unit output polarity	Communication connector	Manifold symbol
DN1	DeviceNet®	32	Source/PNP (Negative common)	M12	QAN
DN2			Sink/NPN (Positive common)		QA
DN3		16	Source/PNP (Negative common)		QBN
DN4			Sink/NPN (Positive common)		QB
PR1	PROFIBUS DP	32	Source/PNP (Negative common)	M12	NAN
PR2			Sink/NPN (Positive common)		NA
PR3		16	Source/PNP (Negative common)		NBN
PR4			Sink/NPN (Positive common)		NB
PR5		32	Source/PNP (Negative common)	D-sub∗1	NCN
PR6			Sink/NPN (Positive common)		NC
PR7		16	Source/PNP (Negative common)		NDN
PR8			Sink/NPN (Positive common)		ND
MJ1	CC-Link	32	Source/PNP (Negative common)	M12	VAN
MJ2			Sink/NPN (Positive common)		VA
MJ3		16	Source/PNP (Negative common)		VBN
MJ4			Sink/NPN (Positive common)		VB
EC1	EtherCAT	32	Source/PNP (Negative common)	M12	DAN
EC2			Sink/NPN (Positive common)		DA
EC3		16	Source/PNP (Negative common)		DBN
EC4			Sink/NPN (Positive common)		DB
PN1	PROFINET	32	Source/PNP (Negative common)	M12	FAN
PN2			Sink/NPN (Positive common)		FA
PN3		16	Source/PNP (Negative common)		FBN
PN4			Sink/NPN (Positive common)		FB
EN1	EtherNet/IP™	32	Source/PNP (Negative common)	M12	EAN
EN2			Sink/NPN (Positive common)		EA
EN3		16	Source/PNP (Negative common)		EBN
EN4			Sink/NPN (Positive common)		EB
PL1	Ethernet POWERLINK	32	Source/PNP (Negative common)	M12	GAN
PL3		16			GBN
IL1	IO-Link	32	Source/PNP (Negative common)	M12	KAN

∗1 Enclosure is IP40 when the communication connector is D-sub.

EX260 SI Unit (Safety Communication)

EX260−F PS1

Communication protocol

Symbol	Protocol	Number of outputs	SI unit output polarity	Communication connector	Manifold symbol
PS1	PROFIsafe	32	Source/PNP (Negative common)	M12	FPN

③ Clamp bracket assembly

Series	Part no.
SY3000	SY30M-15-1A
SY5000/7000	SY50M-15-1A

∗ Part number is for one assembly.

Wiring

EX126

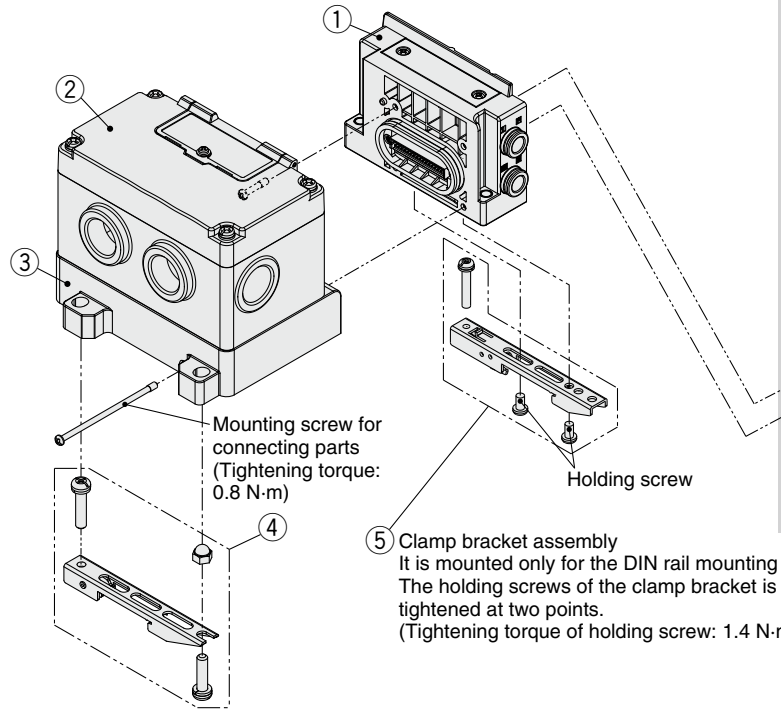

Manifold exploded view

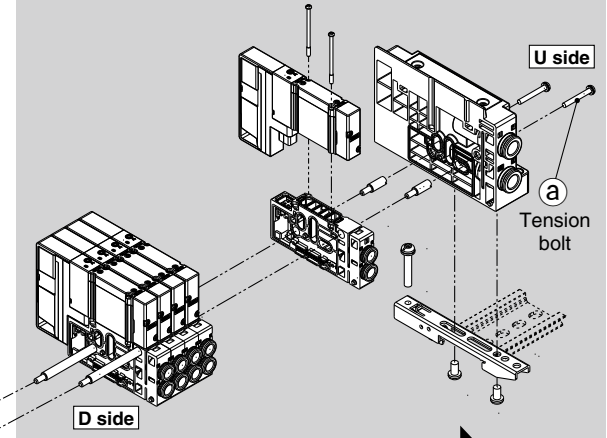

Refer to pages 197 to 200 for details on common parts.

Manifold Parts Nos.

① SUP/EXH block assembly

SY 3 0M−1−1A □ − C8 − □

Series

3	SY3000
5	SY5000
7	SY7000

Pilot, Silencer/Piping type

Symbol	Pilot type		Built-in silencer	Piping direction
	Internal	External		
Nil	●	—	—	Side
S	●	—	●	
R	—	●	—	
V	●	—	—	Top
RV	—	●	—	
VP	●	—	●*1	
B	●	—	—	Bottom
BS	●	—	●	
BR	—	●	—	

*1 For silencer (supply side) E port is plugged.
* "B" for the bottom-ported type can be selected for the SY5000/7000 series.

Mounting

Nil	Direct mounting
D0	DIN rail mounting (Without DIN rail)

* For the bottom-ported type, the symbol is nil.

P, E port size (One-touch fittings)

Symbol	P, E port		SY3000	SY5000	SY7000	Note
C8	ø8		●	—	—	Side/Bottom/ Top ported Metric size
C10	ø10		—	●	—	
C12	ø12		—	—	●	
N9	ø5/16"		●	—	—	Side/Bottom/ Top ported Inch size
N11	ø3/8"		—	●	—	
N13	ø1/2"		—	—	●	
L8	ø8	Upward elbow	●	—	—	Side ported Metric size
L10	ø10		—	●	—	
L12	ø12		—	—	●	
LN9	ø5/16"		●	—	—	Side ported Inch size
LN11	ø3/8"		—	●	—	
LN13	ø1/2"		—	—	●	
B8	ø8	Downward elbow	●	—	—	Side ported Metric size
B10	ø10		—	●	—	
B12	ø12		—	—	●	
BN9	ø5/16"		●	—	—	Side ported Inch size
BN11	ø3/8"		—	●	—	
BN13	ø1/2"		—	—	●	
00[*1]	Plug		●	●	●	P/E port entry on one side or Top ported

*1 It can be selected only if no symbol or "S" or "V" or "B" is selected for the pilot and the piping.

SUP/EXH block assembly (D side) accessories and the number of accessories

Accessories	SY3000	SY5000 SY7000
ⓐ **Tension bolt**	None*1	3 pcs.

*1 Since the nuts are embedded in the SUP/EXH block

② EX126 SI unit

EX126D−SMJ1

* CC-Link (Positive common)

③ Terminal block plate assembly

VVQC1000−74A−2

④ Clamp bracket assembly for EX126 SI unit

SY30M−15−4A

* Part number is for one assembly.

⑤ Clamp bracket assembly

Series	Part no.
SY3000	SY30M-15-1A
SY5000/7000	SY50M-15-1A

* Part number is for one assembly.

Wiring

EX120

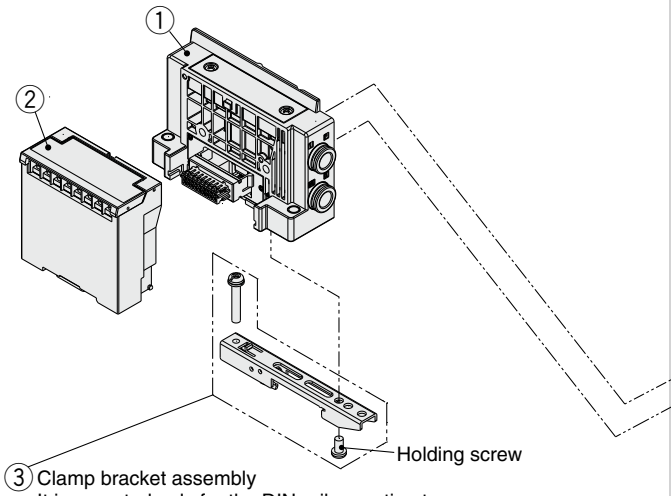

③ Clamp bracket assembly
It is mounted only for the DIN rail mounting type.
The holding screw of the clamp bracket is tightened at one point.
(Tightening torque of holding screw: 1.4 N·m)

Manifold exploded view

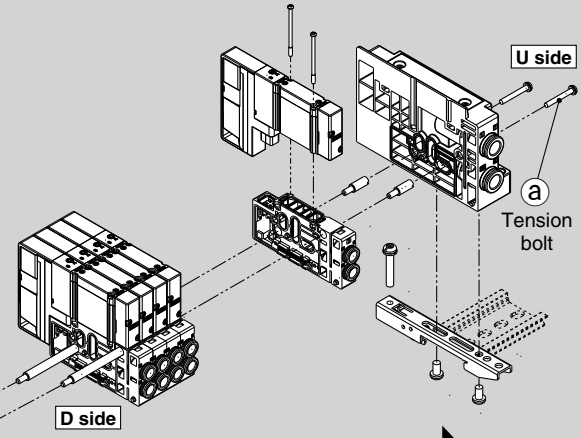

Refer to pages 197 to 200 for details on common parts.

Manifold Parts Nos.

① SUP/EXH block assembly

SY 3 0M−1−16A □ − C8 − □

Series

3	SY3000
5	SY5000
7	SY7000

Pilot, Silencer/Piping type

Symbol	Pilot type		Built-in silencer	Piping direction
	Internal	External		
Nil	●	—	—	Side
S	●	—	●	
R	—	●	—	
V	●	—	—	Top
RV	—	●	—	
VP	●	—	●∗1	
B	●	—	—	Bottom
BS	●	—	●	
BR	—	●	—	

∗1 For silencer (supply side) E port is plugged.
∗ "B" for the bottom-ported type can be selected for the SY5000/7000 series.

Mounting

Nil	Direct mounting
D0	DIN rail mounting (Without DIN rail)

∗ For the bottom-ported type, the symbol is nil.

P, E port size (One-touch fittings)

Symbol	P, E port		SY3000	SY5000	SY7000	Note
C8	ø8		●	—	—	Side/Bottom/ Top ported Metric size
C10	ø10		—	●	—	
C12	ø12		—	—	●	
N9	ø5/16"		●	—	—	Side/Bottom/ Top ported Inch size
N11	ø3/8"		—	●	—	
N13	ø1/2"		—	—	●	
L8	ø8	Upward elbow	●	—	—	Side ported Metric size
L10	ø10		—	●	—	
L12	ø12		—	—	●	
LN9	ø5/16"		●	—	—	Side ported Inch size
LN11	ø3/8"		—	●	—	
LN13	ø1/2"		—	—	●	
B8	ø8	Downward elbow	●	—	—	Side ported Metric size
B10	ø10		—	●	—	
B12	ø12		—	—	●	
BN9	ø5/16"		●	—	—	Side ported Inch size
BN11	ø3/8"		—	●	—	
BN13	ø1/2"		—	—	●	
00∗1	Plug		●	●	●	P/E port entry on one side or Top ported

∗1 It can be selected only if no symbol or "S" or "V" or "B" is selected for the pilot and the piping.

SUP/EXH block assembly (D side) accessories and the number of accessories

Accessories	SY3000	SY5000 SY7000
ⓐ **Tension bolt**	None∗1	3 pcs.

∗1 Since the nuts are embedded in the SUP/EXH block

② EX120 SI unit

EX120−S DN1

Communication protocol

DN1	DeviceNet® (Positive common)
CS1	OMRON Corp.: CompoBus/S (16 outputs) (Positive common)
CS2	OMRON Corp.: CompoBus/S (8 outputs) (Positive common)
MJ1	CC-Link (Positive common)
CM1	CompoNet® NPN (Positive common)
CM3	CompoNet® PNP (Negative common)

③ Clamp bracket assembly

Series	Part no.
SY3000	SY30M-15-1A
SY5000/7000	SY50M-15-1A

∗ Part number is for one assembly.

Wiring

EX180

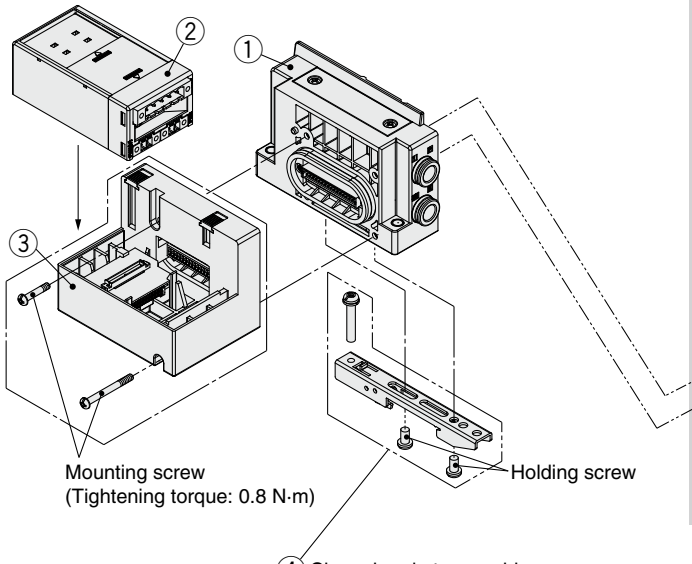

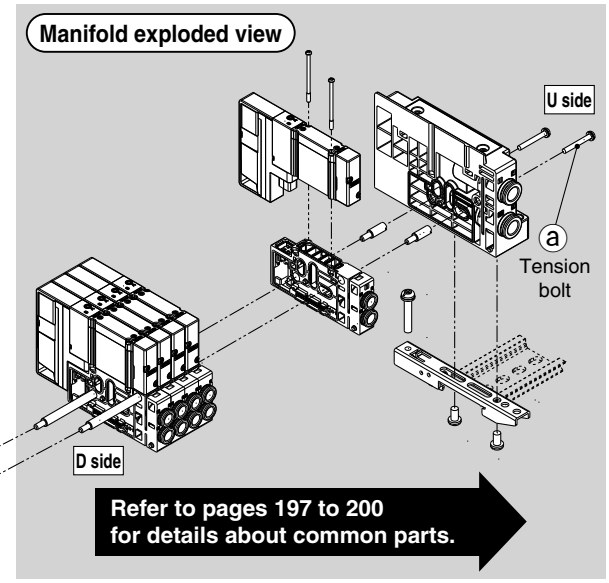

Refer to pages 197 to 200 for details about common parts.

④ Clamp bracket assembly
It is mounted only for the DIN rail mounting type.
The holding screws of the clamping bracket is tightened at two points.
(Tightening torque of holding screw: 1.4 N·m)

Manifold Parts No.

① SUP/EXH block assembly

SY 3 0M − 1 − 1A □ − C8 − □

Series

3	SY3000
5	SY5000
7	SY7000

Mounting

Nil	Direct mounting
D0	DIN rail mounting (Without DIN rail)

∗: For bottom ported, the symbol is nil.

Pilot, Silencer/Piping type

Symbol	Pilot type		Built-in silencer	Piping direction
	Internal	External		
Nil	●	—	—	Side
S	●	—	●	
R	—	●	—	
V	●	—	—	Top
RV	—	●	—	
VP	●	—	●∗1	
B	●	—	—	Bottom
BS	●	—	●	
BR	—	●	—	

∗1: For silencer (supply side). E port is plugged.
∗: "B" for bottom ported can be selected for the SY5000/7000 series.

P, E port size (One-touch fittings)

Symbol	P, E port		SY3000	SY5000	SY7000	Note
C8	ø8		●	—	—	Side/Bottom/ Top ported Metric size
C10	ø10		—	●	—	
C12	ø12		—	—	●	
N9	ø5/16"		●	—	—	Side/Bottom/ Top ported Inch size
N11	ø3/8"		—	●	—	
N13	ø1/2"		—	—	●	
L8	ø8	Upward elbow	●	—	—	Side ported Metric size
L10	ø10		—	●	—	
L12	ø12		—	—	●	
LN9	ø5/16"		●	—	—	Side ported Inch size
LN11	ø3/8"		—	●	—	
LN13	ø1/2"		—	—	●	
B8	ø8	Downward elbow	●	—	—	Side ported Metric size
B10	ø10		—	●	—	
B12	ø12		—	—	●	
BN9	ø5/16"		●	—	—	Side ported Inch size
BN11	ø3/8"		—	●	—	
BN13	ø1/2"		—	—	●	
00∗1	Plug		●	●	●	P/E port entry on one side or Top ported

∗1: It can be selected only if no symbol or "S" or "V" or "B" is selected for the pilot and the piping.

SUP/EXH block assembly (D side) accessories and the number of accessories

Accessories	SY3000	SY5000 SY7000
ⓐ**Tension bolt**	None∗1	3 pcs.

∗1 Since the nuts are embedded in the SUP/EXH block.

② EX180 Series SI Unit

EX180 − S DN3 □ − □

Protocol

DN3	DeviceNet® (32 points Sink/NPN (Positive common))
DN4	DeviceNet® (16 points Sink/NPN (Positive common))
DN5	DeviceNet® (32 points Source/PNP (Negative common))
DN6	DeviceNet® (16 points Source/PNP (Negative common))
MJ3	CC-Link (32 points Sink/NPN (Positive common))
MJ5	CC-Link (32 points Source/PNP (Negative common))

Made to Order
(Click **here** for details.)

Protocol
EtherCAT®
AnyWireASLINK

Communication connector type

Nil	T-branch type
A	Straight type

∗: Communication and power supply connectors are included.

③ Connector block assembly

SY30M − 14 − 17A

④ Clamp bracket assembly

Series	Part no.
SY3000	SY30M-15-1A
SY5000/7000	SY50M-15-1A

∗: Part number is for one assembly.

Manifold Exploded View (Common Parts)

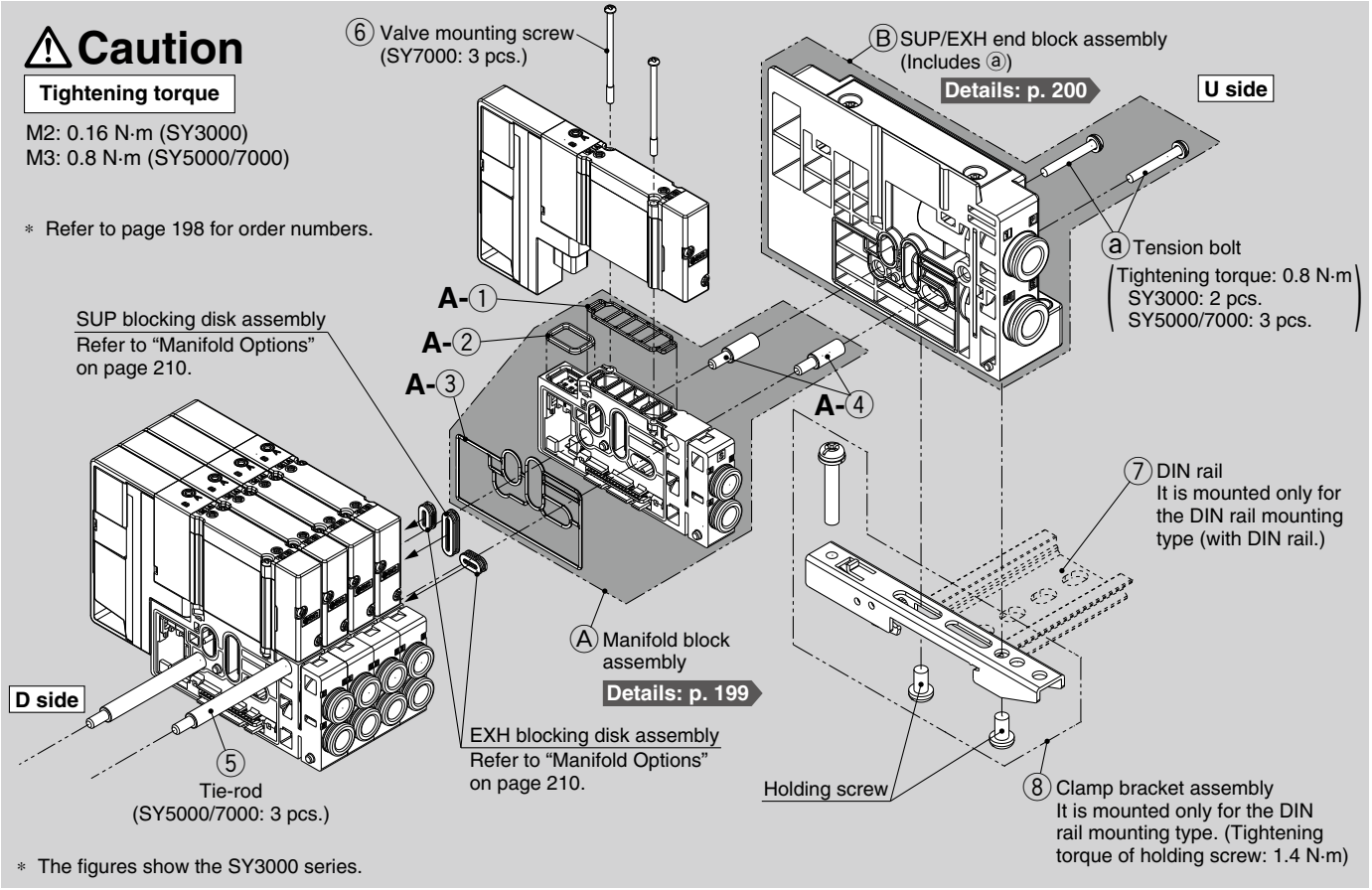

Type 10, 11, 12: How to Increase Connector Type Manifolds

1 **Loosen the U-side tension bolt ⓐ, and remove the Ⓑ SUP/EXH end block assembly.**

2 **Screw in ④ tie-rods for additional stations to the ⑤ tie-rod of the manifold.**

(Screw them in until there is no gap between the tie-rods.)

3 **Connect the Ⓐ manifold block assembly and Ⓑ SUP/EXH end block assembly to be added, and tighten the tension bolt ⓐ.**

Tightening torque for tension bolt ⓐ (M3): 0.8 N·m

⚠Caution

1. Be sure to shut off the power and air supplies before disassembly.
   Furthermore, since air may remain inside the actuator, piping and manifold, confirm that the air is completely exhausted before performing any work.
2. When disassembly and assembly are performed, air leakage may result if the tightening of the tension bolt is inadequate.

<For SY3000>

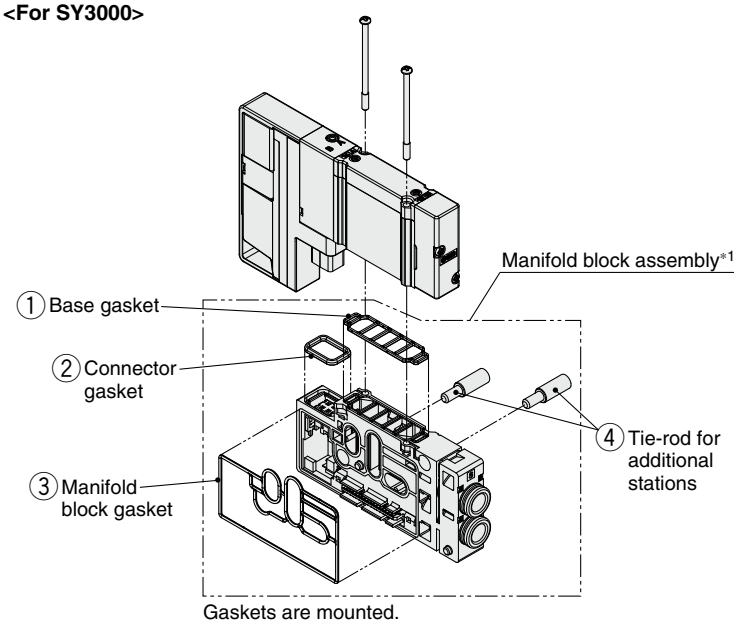

∗1 **Manifold block assembly**

No.	Description	Quantity	Note
①②③	Gasket	3	For base, connector, and manifold block
④	Tie-rod for additional stations	SY3000: 2 pcs. SY5000: 3 pcs. SY7000: 3 pcs.	

Refer to page 198 for ordering single unit.

For SS5Y3-10/11/12, SS5Y5-(M)10/11/12, SS5Y7-(M)10/11/12

No.	Description			SY3000	SY5000	SY7000	Note
A-①	Manifold block assembly	Base gasket (for connector connecting base)		SY30M-9-1A	SY50M-9-1A	SY70M-9-1A	Part numbers shown on the left are for 10 valves. (10 pcs.)
A-②		Connector gasket		SX3000-146-2			Supplied individually
A-③		Manifold block gasket		SY30M-9-2	SY50M-9-2	SY70M-9-2	Supplied individually
A-④		Tie-rod for additional stations*1	SY3000/5000/7000	SY30M-49-2-A (10.5 mm pitch)	SV2000-55-2A-A (16 mm pitch)	SY70M-49-2-A*2 (19 mm pitch)	2 pcs. supplied (SY3000), 3 pcs. supplied (SY5000/7000)
			For mixed mounting of SY3000/5000: SY3000 A, B port size ø8, ø5/16"	SV2000-55-2A-A (16 mm pitch)		—	3 pcs. supplied
			For mixed mounting of SY3000/5000: SY3000 except A, B port size ø8, ø5/16"*4	SY50M-49-2 (12.5 mm pitch)		—	3 pcs. supplied
⑤	Tie-rod	SY3000/5000/7000		VVQC1000-TR-□ (10.5 mm pitch)	SV2000-55-1-□-A (16 mm pitch)	SY70M-49-1-□-A (19 mm pitch)	□: Manifold stations (2 to 24 stations) 2 pcs. supplied (SY3000), 3 pcs. supplied (SY5000/7000)
		Mixed mounting type manifold	SS5Y5-M**	SY50M-49-1-□-A*3*4 (12.5 mm pitch)		—	□: Manifold stations (2 to 24 stations) 3 pcs. supplied
				SV2000-55-1-□-A*5 (16 mm pitch)		—	
			SS5Y7-M**	—	SY70M-49-1-□-A (19 mm pitch)		
⑥	Valve mounting screw	Round head combination screw		SY3000-23-24A (M2 x 32)	SY5000-221-1A (M3 x 32.5)	SY7000-221-1A (M3 x 36.5)	Part numbers shown on the left are as follows. SY3000/5000: for 10 valves (20 pcs. included) SY7000: for 10 valves (30 pcs. included)
		Hexagon socket head cap screw		SY3000-222-1A (M2 x 32)	SY5000-222-1A (M3 x 32.5)	SY7000-222-1A (M3 x 36.5)	
⑦	DIN rail			VZ1000-11-1-□		VZ1000-11-4-□	Refer to page 203.
⑧	Clamp bracket assembly (for connector connecting base)			SY30M-15-1A	SY50M-15-1A		Supplied individually
ⓐ	Tension bolt (for connector connecting base)*6			AC00530	SX3000-145-21		Supplied individually

*1 The manifold of the SY3000 (SS5Y3-10/11/12) can be assembled by connecting the tie-rods for additional stations for the number of manifold stations. However, the manifold of the SY5000 or SY7000 (SS5Y5/7-10/11/12 including mixed mounting) cannot be assembled by connecting the tie-rods for additional stations for the number of manifold stations.
*2 Includes the case when mounting with the SY5000
*3 When mounting only the SY3000 (12.5 mm pitch except A, B port size ø8, ø5/16")
*4 The port sizes except A, B port size ø8, ø5/16" are the following: ø2, ø3.2, ø4, ø6, ø1/8", ø5/32", ø1/4".
*5 When mounting only the SY3000 (16 mm pitch A, B port size ø8, ø5/16")
*6 For the SY3000 SUP/EXH end block (there are no tension bolts for the SY3000 SUP/EXH block) or the SY5000 and SY7000 SUP/EXH (end) block

Manifold Parts Nos.

Ⓐ Manifold block assembly

SY 3 0M−2− 1 D A− C6

Series

3	SY3000
5	SY5000
7	SY7000

Piping direction

1	Side/Top ported
2	Bottom ported

∗ "2" (bottom ported) can be selected for the SY5000/7000 series.

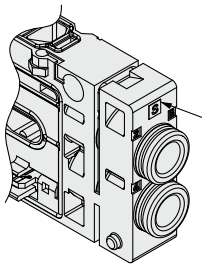

Wiring type

S	Single wiring
D	Double wiring

A, B port size (One-touch fittings)

Symbol	A, B port	SY3000	SY5000	SY7000	Note
C2	ø2	●	—	—	Side/Bottom ported Metric size
C3	ø3.2	●	—	—	
C4	ø4	●	●	—	
C6	ø6	●	●	●	
C8	ø8	—∗1	●	●	
C10	ø10	—	—	●	
C12	ø12	—	—	●	
N1	ø1/8"	●	—	—	Side/Bottom ported Inch size
N3	ø5/32"	●	●	—	
N7	ø1/4"	●	●	●	
N9	ø5/16"	—∗1	●	●	
N11	ø3/8"	—	—	●	

∗1 Refer to mixed mounting type for ø8, ø5/16".

Symbol		A, B port	SY3000	SY5000	SY7000	Note
L4	Upward elbow	ø4	●	●	—	Side ported Metric size
L6		ø6	●	●	●	
L8		ø8	—∗1	●	●	
L10		ø10	—	—	●	
L12		ø12	—	—	●	
LN3		ø5/32"	●	—	—	Side ported Inch size
LN7		ø1/4"	●	●	—	
LN9		ø5/16"	—∗1	●	—	
LN11		ø3/8"	—	—	●	
B4	Downward elbow	ø4	●	●	—	Side ported Metric size
B6		ø6	●	●	●	
B8		ø8	—∗1	●	●	
B10		ø10	—	—	●	
B12		ø12	—	—	●	
BN3		ø5/32"	●	—	—	Side ported Inch size
BN7		ø1/4"	●	●	—	
BN9		ø5/16"	—∗1	●	—	
BN11		ø3/8"	—	—	●	
00		Plug	●	●	●	Top ported

Ⓐ **Manifold block assembly** (All parts inside - - - are included.)

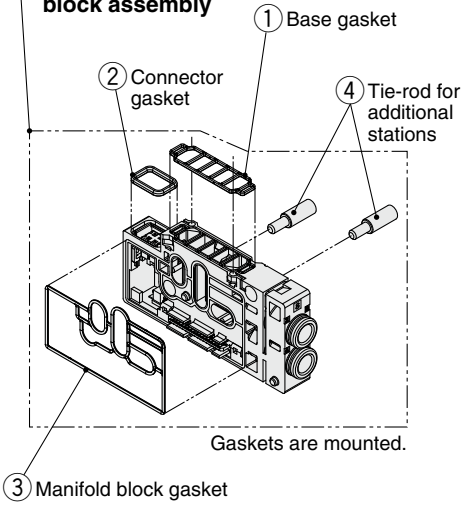

Ⓐ Mixed mounting of the SY3000/5000
Manifold block assembly for mounting the SY3000

SY50M−2− 3 D A− C6

Piping direction

3	Side/Top ported
4	Bottom ported

Wiring type

S	Single wiring
D	Double wiring

A, B port size (One-touch fittings)

Symbol	A, B port	Note
C2	ø2	Side/Bottom ported Metric size
C3	ø3.2	
C4	ø4	
C6	ø6	
N1	ø1/8"	Side/Bottom ported Inch size
N3	ø5/32"	
N7	ø1/4"	

Symbol		A, B port	Note
L4	Upward elbow	ø4	Side ported Metric size
L6		ø6	
LN3		ø5/32"	Side ported Inch size
LN7		ø1/4"	
B4	Downward elbow	ø4	Side ported Metric size
B6		ø6	
BN3		ø5/32"	Side ported Inch size
BN7		ø1/4"	
00		Plug	Top ported

Ⓐ Mixed mounting of the SY3000/5000
Manifold block assembly for mounting the SY3000 for ø8, ø5/16"

(A manifold block assembly for mounting the SY3000 valves on the SY5000 manifolds at A, B port size: ø8, ø5/16")

SY50M−2− 5 D A− C8

Piping direction

5	Side ported
6	Bottom ported

Wiring type

S	Single wiring
D	Double wiring

A, B port size (One-touch fittings)

Symbol	A, B port		Note
C8	ø8		Side/Bottom ported Metric size
N9	ø5/16"		Side/Bottom ported Inch size
L8	Upward elbow	ø8	Side ported Metric size
LN9		ø5/16"	Side ported Inch size
B8	Downward elbow	ø8	Side ported Metric size
BN9		ø5/16"	Side ported Inch size

Manifold block assembly accessories and the number of accessories

Accessories	SY3000	SY5000 SY7000∗1
① Base gasket	1 pc.	
② Connector gasket	1 pc.	
③ Manifold block gasket	1 pc.	
④ Tie-rod assembly for additional stations	2 pcs.	3 pcs.

∗1 Including mixed mounting type

Ⓐ Mixed mounting of the SY5000/7000
Manifold block assembly for mounting the SY5000

SY70M−2− 3 D A− C10

Piping direction

3	Side/Top ported
4	Bottom ported

Wiring type

S	Single wiring
D	Double wiring

A, B port size (One-touch fittings)

Symbol	A, B port	Note
C6	ø6	Side/Bottom ported Metric size
C8	ø8	
C10	ø10	
C12	ø12	
N7	ø1/4"	Side/Bottom ported Inch size
N9	ø5/16"	
N11	ø3/8"	

Symbol		A, B port	Note
L6	Upward elbow	ø6	Side ported Metric size
L8		ø8	
L10		ø10	
L12		ø12	
LN11		ø3/8"	Side ported Inch size

Symbol		A, B port	Note
B6	Downward elbow	ø6	Side ported Metric size
B8		ø8	
B10		ø10	
B12		ø12	
BN11		ø3/8"	Side ported Inch size
00		Plug	Top ported

Manifold Parts Nos.

Ⓑ SUP/EXH end block assembly

SY 3 0M − 3 − 1A □ − C8 − □

Series

3	SY3000
5	SY5000
7	SY7000

Mounting

Nil	Direct mounting
D0	DIN rail mounting (Without DIN rail)

∗ For the bottom-ported type, the symbol is nil.

Pilot, Silencer/Piping type

Symbol	Pilot type		Built-in silencer	Piping direction
	Internal	External		
Nil	●	—	—	Side
S	●	—	●	
R	—	●	—	
V	●	—	—	Top
RV	—	●	—	
VP	●	—	●∗1	
B	●	—	—	Bottom
BS	●	—	●	
BR	—	●	—	

∗1 For silencer (supply side) E port is plugged.
∗ "B" for the bottom-ported type can be selected for the SY5000/7000 series.

P, E port size (One-touch fittings)

Symbol	P, E port		SY3000	SY5000	SY7000	Note
C8	ø8		●	—	—	Side/Bottom/Top ported Metric size
C10	ø10		—	●	—	
C12	ø12		—	—	●	
N9	ø5/16"		●	—	—	Side/Bottom/Top ported Inch size
N11	ø3/8"		—	●	—	
N13	ø1/2"		—	—	●	
L8	Upward elbow	ø8	●	—	—	Side ported Metric size
L10		ø10	—	●	—	
L12		ø12	—	—	●	
LN9		ø5/16"	●	—	—	Side ported Inch size
LN11		ø3/8"	—	●	—	
LN13		ø1/2"	—	—	●	
B8	Downward elbow	ø8	●	—	—	Side ported Metric size
B10		ø10	—	●	—	
B12		ø12	—	—	●	
BN9		ø5/16"	●	—	—	Side ported Inch size
BN11		ø3/8"	—	●	—	
BN13		ø1/2"	—	—	●	
00∗1	Plug		●	●	●	P/E port entry on one side or Top ported

∗1 It can be selected only if no symbol or "S" or "V" or "B" is selected for the pilot and the piping.

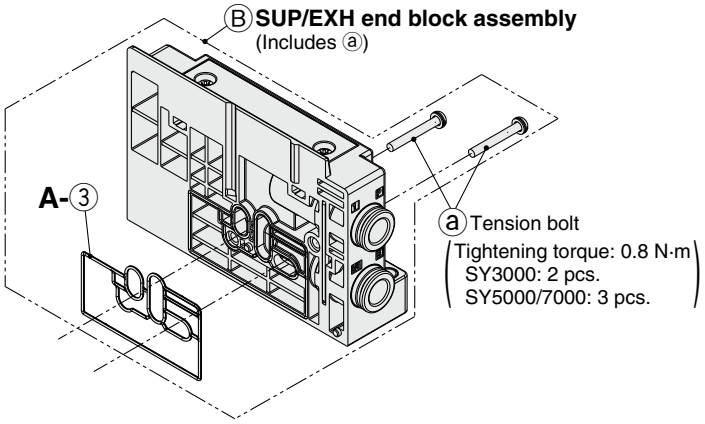

SUP/EXH end block assembly accessories and the number of accessories

Accessories	SY3000	SY5000/7000
ⓐ **Tension bolt**	2 pcs.	3 pcs.
A-③ Manifold block gasket	1 pc.	

Gasket is mounted.

Manifold Parts Nos.

■ Cover assembly/Silencer cover assembly/Port block assembly for SUP/EXH (end) block assembly

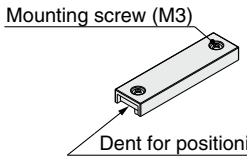

Cover assembly
(Internal pilot)

SY 3 0M−4− 1A

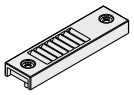

Silencer cover assembly
(Internal pilot, Built-in silencer)

SY 3 0M−5− 1A

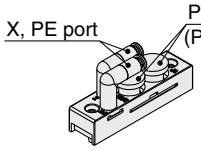

Port block assembly
(Side/Bottom ported, External pilot, Straight, Downward elbow)

SY 3 0M−6− 1AR □ − 00 □

A, B port One-touch fittings piping direction

Nil	Straight, Downward elbow (Side ported)
V	Upward elbow (Side ported)

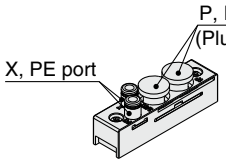

Port block assembly
(Side ported, External pilot, Upward elbow)

X, PE port One-touch fitting type

Symbol	X, PE port		SY3000	SY5000	SY7000
Nil	Metric size	ø4	●	●	—
		ø6	—	—	●
U	Inch size	ø5/32"	●	●	—
		ø1/4"	—	—	●

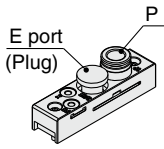

Port block assembly
(Top ported, Internal pilot, for silencer (supply side))

SY 3 0M−6− 3AV − C8

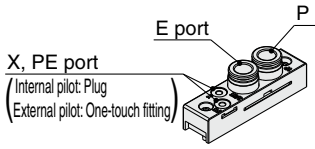

Port block assembly
(Top ported, Internal/External pilot)

SY 3 0M−6− 1A □ V − C8

Series

3	SY3000
5	SY5000
7	SY7000

Pilot type

Nil	Internal pilot
R	External pilot

P, E port size (One-touch fittings)

Symbol	P, E port	SY3000	SY5000	SY7000
C8	ø8	●	—	—
C10	ø10	—	●	—
C12	ø12	—	—	●
N9	ø5/16"	●	—	—
N11	ø3/8"	—	●	—
N13	ø1/2"	—	—	●

∗ Cover assembly, silencer cover assembly, and port block assembly are included in the SUP/EXH (end) block assembly, but they need to be ordered for piping direction change.

Tightening torque for mounting screw
SY3000/5000 (M3): 0.8 N·m
SY7000 (M4): 1.4 N·m

⚠Caution

1. Be sure to shut off the power and air supplies before disassembly.
   Furthermore, since air may remain inside the actuator, piping, and manifold, confirm that the air is completely exhausted before performing any work.
2. When disassembly and assembly are performed, air leakage may result if the tightening of the cover and port block assemblies are inadequate.

SY3000/5000/7000 Series
One-touch Fitting, Plug Assembly Part Nos.

Refer to “How to Replace One-touch Fittings” on page 296 for the replacement method.

■ One-touch fittings

Port size				SY3000	SY5000	SY7000
A, B port*1	Metric size	ø2	Straight type	VVQ1000-50A-C2	—	—
		ø3.2		VVQ1000-50A-C3	—	—
		ø4		VVQ1000-50A-C4	VVQ1000-51A-C4	—
		ø6		VVQ1000-50A-C6	VVQ1000-51A-C6	VVQ2000-51A-C6
		ø8		—	VVQ1000-51A-C8	VVQ2000-51A-C8
		ø10		—	—	VVQ2000-51A-C10
		ø12		—	—	KQ2H12-17-X224
		ø4	Elbow type	SZ3000-73-1A-L4	SZ3000-74-1A-L4	—
		ø6		SZ3000-73-1A-L6	SZ3000-74-1A-L6	SZ3000-83-1A-L6
		ø8		—	SZ3000-74-1A-L8	SZ3000-83-1A-L8
		ø10		—	—	SZ3000-83-1A-L10
		ø12		—	—	KQ2L12-17N-X224
		ø4	Long elbow type	SZ3000-73-2A-L4	SZ3000-74-2A-L4	—
		ø6		SZ3000-73-2A-L6	SZ3000-74-2A-L6	SZ3000-83-2A-L6
		ø8		—	SZ3000-74-2A-L8	SZ3000-83-2A-L8
		ø10		—	—	SZ3000-83-2A-L10
		ø12		—	—	KQ2W12-17N-X224
	Inch size	ø1/8"	Straight type	VVQ1000-50A-N1	—	—
		ø5/32"		VVQ1000-50A-N3	VVQ1000-51A-N3	—
		ø1/4"		VVQ1000-50A-N7	VVQ1000-51A-N7	VVQ2000-51A-N7
		ø5/16"		—	VVQ1000-51A-N9	VVQ2000-51A-N9
		ø3/8"		—	—	VVQ2000-51A-N11
		ø5/32"	Elbow type	KJL03-95-X224	—	—
		ø1/4"		KJL07-95-X224	KQ2L07-14-X224	—
		ø5/16"		—	KQ2L09-14-X224	—
		ø3/8"		—	—	KQ2L11-14-X224
		ø5/32"	Long elbow type	KJL03-95-X225	—	—
		ø1/4"		KJL07-95-X225	KQ2L07-14-X225	—
		ø5/16"		—	KQ2L09-14-X225	—
		ø3/8"		—	—	KQ2L11-14-X225
P, E port	Metric size	ø8	Straight type	VVQ1000-51A-C8	—	—
		ø10		—	VVQ2000-51A-C10	—
		ø12		—	—	VVQ4000-50B-C12
		ø8	Elbow type	SZ3000-74-1A-L8	—	—
		ø10		—	SZ3000-83-1A-L10	—
		ø12		—		KQ2L12-19N-X224
		ø8	Long elbow type	SZ3000-74-2A-L8	—	—
		ø10		—	SZ3000-83-2A-L10	—
		ø12		—	—	KQ2W12-19N-X224
	Inch size	ø5/16"	Straight type	VVQ1000-51A-N9	—	—
		ø3/8"		—	VVQ2000-51A-N11	—
		ø1/2"		—	—	VVQ4000-50B-N13
		ø5/16"	Elbow type	KQ2L09-14-X224	—	—
		ø3/8"		—	KQ2L11-14-X224	—
		ø1/2"		—	—	KQ2L13-19N-X224
		ø5/16"	Long elbow type	KQ2L09-14-X225	—	—
		ø3/8"		—	KQ2L11-14-X225	—
		ø1/2"		—	—	KQ2W13-19N-X224

*1 A and B ports (ø8 and ø5/16") of the SY3000 and 5000 mixed mounting type are the same as those of the SY5000.
* Purchasing order is available in units of 10 pieces. Additionally, when performing the piping in the same orientation using the elbow type, please order “elbow type” or “long elbow type” appropriately.
* Select the same port size for both the A and B ports.

■ Plug assembly

	SY3000	SY5000	SY7000
A, B port	VVQ0000-58A	VVQ1000-58A	VVQ2000-58A
P, E port	VVQ1000-58A	VVQ2000-58A	SY9000-62-1A

* Purchasing order is available in units of 10 pieces.

■ DIN rail dimensions/weight for the SY3000/5000 Plug-in connector connecting base

VZ1000-11-1-□

∗ After confirming the L3 dimension in the dimensions table of each series, refer to the DIN rail dimensions table below and specify the number in the box □.

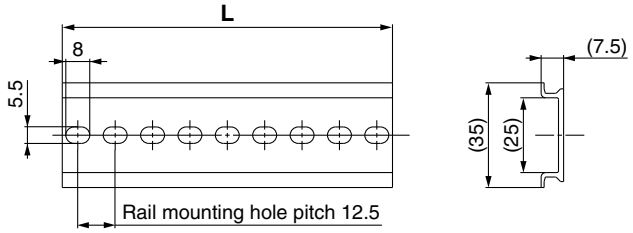

No.	0	1	2	3	4	5	6	7	8	9	10	11	12	13	14	15	16	17	18
L dimension	98	110.5	123	135.5	148	160.5	173	185.5	198	210.5	223	235.5	248	260.5	273	285.5	298	310.5	323
Weight [g]	17.6	19.9	22.1	24.4	26.6	28.9	31.1	33.4	35.6	37.9	40.1	42.4	44.6	46.9	49.1	51.4	53.6	55.9	58.1

No.	19	20	21	22	23	24	25	26	27	28	29	30	31	32	33	34	35	36	37
L dimension	335.5	348	360.5	373	385.5	398	410.5	423	435.5	448	460.5	473	485.5	498	510.5	523	535.5	548	560.5
Weight [g]	60.4	62.5	64.9	67.1	69.4	71.6	73.9	76.1	78.4	80.6	82.9	85.1	87.4	89.6	91.9	94.1	96.4	98.6	100.9

No.	38	39	40	41	42	43	44	45	46	47	48	49	50	51	52	53	54	55	56
L dimension	573	585.5	598	610.5	623	635.5	648	660.5	673	685.5	698	710.5	723	735.5	748	760.5	773	785.5	798
Weight [g]	103.1	105.4	107.6	109.9	112.1	114.4	116.6	118.9	121.1	123.4	125.6	127.9	130.1	132.4	134.6	136.9	139.1	141.4	143.6

No.	57	58	59	60	61	62	63	64	65	66	67	68	69	70	71
L dimension	810.5	823	835.5	848	860.5	873	885.5	898	910.5	923	935.5	948	960.5	973	985.5
Weight [g]	145.9	148.1	150.4	152.6	154.9	157.1	159.4	161.6	163.9	166.1	168.4	170.6	172.9	175.1	177.4

■ DIN rail dimensions/weight for the SY7000 Plug-in connector connecting base

VZ1000-11-4-□

∗ After confirming the L3 dimension in the dimensions table of each series, refer to the DIN rail dimensions table below and specify the number in the box □.

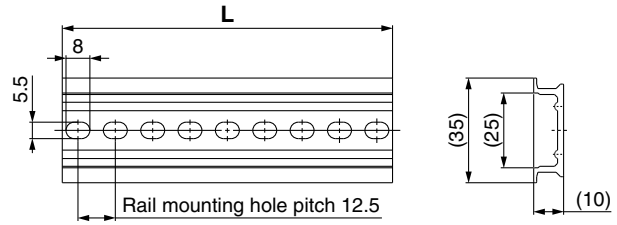

No.	0	1	2	3	4	5	6	7	8	9	10	11	12	13	14	15	16	17	18
L dimension	98	110.5	123	135.5	148	160.5	173	185.5	198	210.5	223	235.5	248	260.5	273	285.5	298	310.5	323
Weight [g]	24.8	28	31.1	34.3	37.4	40.6	43.8	46.9	50.1	53.3	56.4	59.6	62.7	65.9	69.1	72.2	75.4	78.6	81.7

No.	19	20	21	22	23	24	25	26	27	28	29	30	31	32	33	34	35	36	37
L dimension	335.5	348	360.5	373	385.5	398	410.5	423	435.5	448	460.5	473	485.5	498	510.5	523	535.5	548	560.5
Weight [g]	84.9	88	91.2	94.4	97.5	100.7	103.9	107	110.2	113.3	116.5	119.7	122.8	126	129.2	132.3	135.5	138.6	141.8

No.	38	39	40	41	42	43	44	45	46	47	48	49	50	51	52	53	54	55	56
L dimension	573	585.5	598	610.5	623	635.5	648	660.5	673	685.5	698	710.5	723	735.5	748	760.5	773	785.5	798
Weight [g]	145	148.1	151.3	154.5	157.6	160.8	163.9	167.1	170.3	173.4	176.6	179.8	182.9	186.1	189.2	192.4	195.6	198.7	201.9

No.	57	58	59	60	61	62	63	64	65	66	67	68	69	70	71
L dimension	810.5	823	835.5	848	860.5	873	885.5	898	910.5	923	935.5	948	960.5	973	985.5
Weight [g]	205.1	208.2	211.4	214.5	217.7	220.9	224	227.2	230.4	233.5	236.7	239.8	243	246.2	249.3

⚠Caution

Tightening torque for mounting screw
M2: 0.16 N·m (SY3000)
M3: 0.8 N·m (SY5000/7000)

Manifold Options

* Refer to pages 215 to 217 for dimensions.

■ Individual SUP spacer assembly

[With a connector gasket, a base gasket, and two mounting screws (3 pcs. for the SY7000)]

When the same manifold is used for different pressures, an individual SUP spacer assembly is used as a supply port for different pressures.

* When selecting a One-touch fitting elbow type for a spacer assembly, use it faced upward, since it interferes with A and B port piping of Type 10 manifolds.
* When the elbows are facing upward in A and B ports in Type 10 manifolds, they will interfere with the piping for the spacer assembly. Therefore, combine the A and B ports with straight types or elbows facing downward.

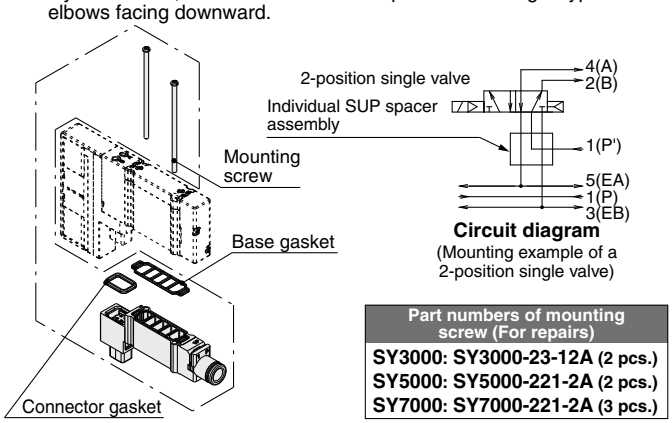

Circuit diagram
(Mounting example of a 2-position single valve)

Part numbers of mounting screw (For repairs)
SY3000: SY3000-23-12A (2 pcs.)
SY5000: SY5000-221-2A (2 pcs.)
SY7000: SY7000-221-2A (3 pcs.)

■ Individual EXH spacer assembly

[With a connector gasket, a base gasket, and two mounting screws (3 pcs. for the SY7000)]

When valve exhaust affects other stations due to the circuit configuration, this spacer assembly is used for individual valve exhaust.

* When selecting a One-touch fitting elbow type for a spacer assembly, use it faced upward, since it interferes with A and B port piping of Type 10 manifolds.
* When the elbows are facing upward in A and B ports in Type 10 manifolds, they will interfere with the piping for the spacer assembly. Therefore, combine the A and B ports with straight types or elbows facing downward.

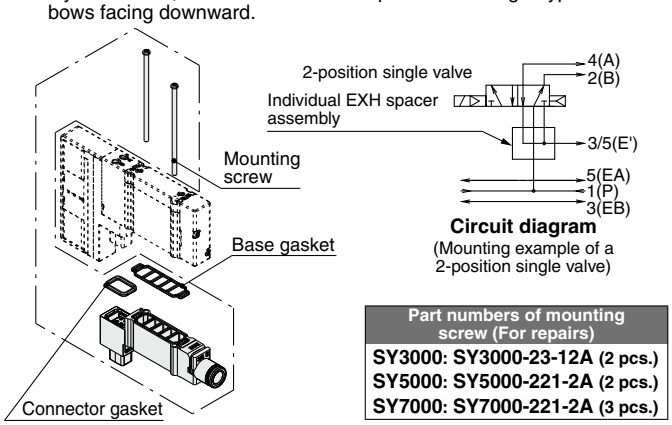

Circuit diagram
(Mounting example of a 2-position single valve)

Part numbers of mounting screw (For repairs)
SY3000: SY3000-23-12A (2 pcs.)
SY5000: SY5000-221-2A (2 pcs.)
SY7000: SY7000-221-2A (3 pcs.)

How to Order Individual SUP/EXH Spacer Assembly

One-touch fitting Straight type SY **3** 0M – **38** – 1 A – **C6**

One-touch fitting Elbow type SY **3** 0M – **38** – **2** A – **L6**

Series

3	SY3000
5	SY5000
7	SY7000

Spacer type

38	Individual SUP spacer
39	Individual EXH spacer

Individual SUP/EXH spacer assembly

2	Short elbow type
3	Long elbow type

* Select the long elbow type for a 3-position valve when using Type 11 and Type 12 downward. However, Type 11 of the SY3000 series for the mixed mounting of connector connecting bases cannot be used downward.

Port size (Metric/One-touch fittings)

Symbol	P, E port	SY3000	SY5000	SY7000
L4	ø4	●	●	—
L6	ø6	●	●	●
L8	ø8	—	●	●
L10	ø10	—	—	●
L12	ø12	—	—	●

Port size (Inch/One-touch fittings)

Symbol	P, E port	SY3000	SY5000	SY7000
LN3	ø5/32"	●	—	—
LN7	ø1/4"	●	●	—
LN9	ø5/16"	—	●	—
LN11	ø3/8"	—	—	●

Port size (Metric/One-touch fittings)

Symbol	P, E port	SY3000	SY5000	SY7000
C2	ø2	●	—	—
C3	ø3.2	●	—	—
C4	ø4	●	●	—
C6	ø6	●	●	●
C8	ø8	—	●	●
C10	ø10	—	—	●
C12	ø12	—	—	●

Port size (Inch/One-touch fittings)

Symbol	P, E port	SY3000	SY5000	SY7000
N1	ø1/8"	●	—	—
N3	ø5/32"	●	●	—
N7	ø1/4"	●	●	●
N9	ø5/16"	—	●	●
N11	ø3/8"	—	—	●

* When using in combination with the SY$^{5}_{7}$30$^{0}_{1}$□-□1-E (With residual pressure release valve), the length of the required mounting screws will differ. Please contact SMC for details.

Model	Port size		Flow rate characteristics			
	1, 3/5 (P, E)	4, 2 (A, B)	1 → 4/2 (P → A/B)		4/2 → 3/5 (A/B → E)	
			C [dm³/(s·bar)]	b	C [dm³/(s·bar)]	b
SY30M-38-1A-C6	C8	C6	1.2	0.32	1.4	0.24
SY30M-39-1A-C6			1.2	0.27	1.1	0.27
SY50M-38-1A-C8	C10	C8	2.7	0.36	3.3	0.22
SY50M-39-1A-C8			2.2	0.37	2.2	0.36
SY70M-38-1A-C12	C12	C12	4.8	0.26	4.7	0.25
SY70M-39-1A-C12			4.9	0.28	4.7	0.23

* Calculation of effective area S and sonic conductance C: S = 5.0 x C
* The value is for manifold base with 5 stations, rubber seal, and individually operated 2-position type.
* For connector connecting base (type 10) manifolds

⚠ Caution

Tightening torque for mounting screw
M2: 0.16 N·m (SY3000)
M3: 0.8 N·m (SY5000/7000)

Manifold Options

∗ Refer to pages 215 to 217 for dimensions.

■ SUP stop valve spacer assembly with residual pressure release valve

[With a connector gasket, a base gasket, and two mounting screws (3 pcs. for the SY7000)]

It is used to shut off the supply air to valves individually.

∗ Cannot be selected when the elbows are facing upward in A and B ports in Type 10 manifolds, since they will interfere with the piping for the spacer assembly

SY 3 0M − 50 − 1A E

Series

3	SY3000
5	SY5000
7	SY7000

Manual override

Nil	Push-turn locking slotted type
E	Push-turn locking lever type

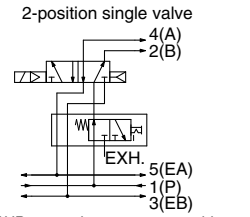

SUP stop valve spacer assembly with residual pressure release valve
Circuit diagram
(Mounting example of a 2-position single valve)

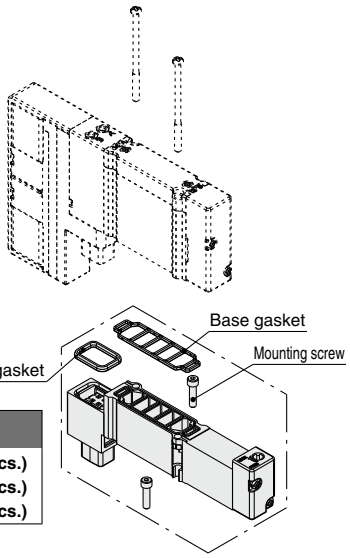

Part numbers of mounting screw (For repairs)
SY3000: SY30M-56-1A (2 pcs.)
SY5000: SY50M-56-1A (2 pcs.)
SY7000: SY70M-56-1A (3 pcs.)

∗ For lever type:
When locking the lever type manual override, push the lever down in the PUSH position with your fingers until it stops, then turn the lever 90° clockwise. (PUSH → LOCK)
Turning the lever without pushing it down until it stops can cause damage to the manual override and other problems such as air leakages.
To unlock the manual override, turn the lever counterclockwise. (LOCK → PUSH)

[How to mount SUP stop valve spacer assembly with residual pressure release valve]
Insert the SUP stop valve mounting screw from the side of the spacer assembly, and mount it to the manifold.
Tighten the SUP stop valve mounting screw to the specified tightening torque.
Mount the valve and tighten the valve mounting screws to the specified tightening torque after mounting the SUP stop valve spacer assembly with residual pressure release valve.

∗ Install the plate type nut to the spacer assembly as shown in the figure if it comes off. The SUP stop valve mounting screws can be tightened with a hexagon wrench without removing the plate type nut.
∗ When the elbows are facing upward in A and B ports in Type 10 manifolds, they will interfere with the piping for the spacer assembly. Therefore, combine the A and B ports with straight types or elbows facing downward.
∗ This product is only for internal pilot specifications, as the external pilot air cannot be shut off.
∗ If the product is equipped with a 3-position closed center, residual pressure cannot be released, so use in combination with a 3-port valve, which can be connected to the A, B piping port.

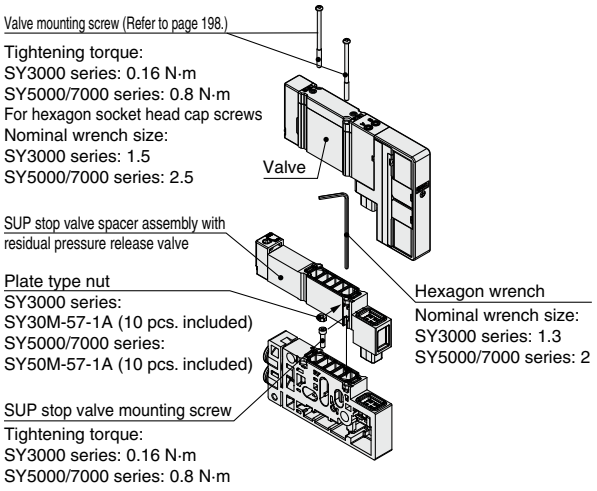

Model	Port size		Flow rate characteristics			
	1, 3/5 (P, E)	4, 2 (A, B)	1 → 4/2 (P → A/B)		4/2 → 3/5 (A/B → E)	
			C [dm³/(s·bar)]	b	C [dm³/(s·bar)]	b
SY30M-50-1A(E)	C8	C6	0.6	0.18	1.4	0.29
SY50M-50-1A(E)	C10	C8	1.6	0.20	3.1	0.23
SY70M-50-1A(E)	C12	C12	3.1	0.18	4.3	0.32

∗ Calculation of effective area S and sonic conductance C: S = 5.0 x C
∗ The value is for manifold base with 5 stations, rubber seal, and individually operated 2-position type.
∗ For connector connecting base (type 10) manifolds

⚠Caution

Tightening torque for mounting screw
M2: 0.16 N·m (SY3000)
M3: 0.8 N·m (SY5000/7000)

Manifold Options

∗ Refer to pages 215 to 217 for dimensions.

■Double check spacer assembly with residual pressure release valve (Side/Bottom ported)

[With a connector gasket, a base gasket, and two mounting screws (3 pcs. for the SY7000)]

It is used to hold the intermediate position of the cylinder for a long period of time. Use a 3-position exhaust center valve when the double check spacer assembly with residual exhaust valve is used. It can also be used for drop prevention at the cylinder stroke end when supply residual pressure is released by using a 2-position single/double valve.

∗ When the elbows are facing upward in A and B ports in Type 10 manifolds, they will interfere with the piping for the spacer assembly. Therefore, combine the A and B ports with straight types or elbows facing downward.

Series	Part no.
SY3000	SY30M-60-1A
SY5000	SY50M-60-1A
SY7000	SY70M-60-1A

	Intermediate stop	Drop prevention
Applicable valve	SY$^{3}_{5}$40$^{0}_{1}$	SY$^{3}_{5}$$^{1}_{2}0^{0}_{1}$

<Example>

Double check spacer assembly with residual pressure release valve
3-position exhaust center valve

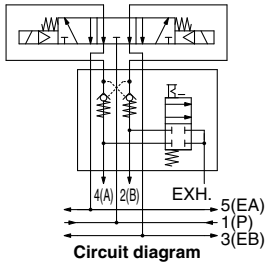

Circuit diagram

(Intermediate stop: When 3-position exhaust center valve is mounted)

Double check spacer assembly with residual pressure release valve
2-position single valve

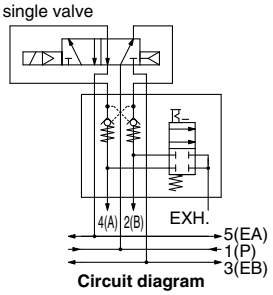

Circuit diagram

(Drop prevention: When 2-position single valve is mounted)

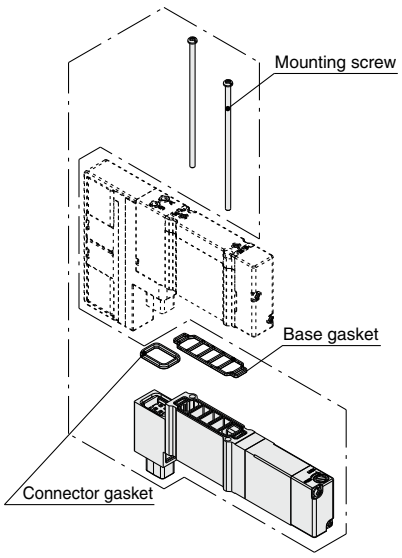

Part numbers of mounting screw (For repairs)
SY3000: SY3000-23-27A (2 pcs.)
SY5000: SY5000-221-4A (2 pcs.)
SY7000: SY7000-221-4A (3 pcs.)

⚠Caution

- Air leakage from the pipe between the valve and cylinder or from the fittings will prevent the cylinder from stopping for a long period of time. Check the leakage using neutral household detergent, such as dish washing soap. Also, check the cylinder's tube gasket, piston seal, and rod seal for air leakage.
- Combining with 3-position closed center or pressure center valve will not work.
- If the exhaust of the double check spacer is restricted too much, the cylinder may not operate properly and may not stop intermediately.
- Set the cylinder load so that the cylinder pressure will be within two times that of the supply pressure.
- If using a double check spacer that is built in to the sub-plate, refer to page 283.

Specifications

Max. operating pressure		1.0 MPa
Min. operating pressure		0.1 MPa
Ambient and fluid temperatures		−10 to 50°C
Flow rate characteristics: C	**SY3000**	0.3 dm³/(s·bar)
	SY5000	0.7 dm³/(s·bar)
	SY7000	1.1 dm³/(s·bar)
Max. operating frequency		3 Hz

■Blanking plate assembly

[With two mounting screws (3 pcs. for the SY7000)]

Used when valve additions are expected or for maintenance. A structure is in place on the blanking plate to prevent the mounting screws from sliding.

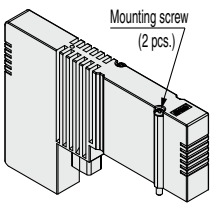

SY30M-26-1A(-B)

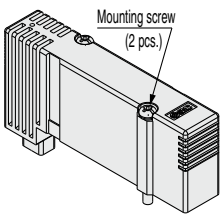

SY50M-26-1A(-B)

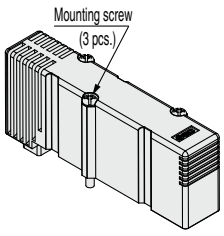

SY70M-26-1A(-B)

How to Order Blanking Plate Assembly

SY 3 0M−26−1A−

●Series

3	SY3000
5	SY5000
7	SY7000

●Option for mounting

Nil	With mounting screw (Round head combination screw)
B	With mounting screw (Hexagon socket head cap screw)

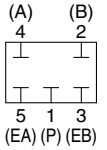

Circuit diagram

Part numbers of mounting screw [Hexagon bolt] (For repairs)
SY3000: SY3000-23-24A [SY3000-222-1A]
SY5000: SY5000-221-1A [SY5000-222-1A]
SY7000: SY7000-221-2A [SY7000-222-1A]

⚠Caution

Tightening torque for mounting screw
M2: 0.16 N·m (SY3000)
M3: 0.8 N·m (SY5000/7000)

∗ Refer to pages 215 to 217 for dimensions.

⚠ Caution

Tightening torque for mounting screw
M2: 0.16 N·m (SY3000)
M3: 0.8 N·m (SY5000/7000)

Manifold Options

∗ Refer to pages 215 to 218 for dimensions.

■ Interface regulator

[With a connector gasket, a base gasket, and two mounting screws (3 pcs. for the SY7000)]

Used when the supply pressure for each valve on the same manifold must be individually set (reduced pressure).

How to Order

SY 3 0M − 05 − P − □

Series

3	SY3000

Pressure gauge option∗1

M1	Without pressure gauge
05	Pressure gauge with MPa display (For odd number station)
06	Pressure gauge with MPa display (For even number station)
N5	Pressure gauge with psi display (For odd number station)∗2
N6	Pressure gauge with psi display (For even number station)∗2

Applicable valve∗3

Nil	For single, double, and 4-position
3	For 3-position

∗1 In the case of the SY3000 series with a pressure gauge, when mounting on the manifold, use caution that the part numbers are different between the odd no. stations and the even no. stations to prevent the pressure gauges from interfering with each other.
If using a connector connecting base M10/11/12 (mixed mounting type) or laminating two or more types of spacer type manifold options for the neighboring stations, you can use only the model without a pressure gauge (M1).

∗2 As per the new Measurement Law, gauges with a psi display will only be sold to overseas customers.

∗3 In the case of the SY3000 series, use caution that the part numbers will differ depending on the one for single/double and 4- and 3-position due to the different length of solenoid valves. Also, if you have selected a model with a pressure gauge, and if at least the one for 3-position is included in the same manifold, use all the ones for 3-position to prevent the pressure gauges from interfering with each other.

SY 5 0M − 00 − P

Series

5	SY5000
7	SY7000

Pressure gauge option

M1	Without pressure gauge
00	Pressure gauge with MPa display
N0	Pressure gauge with psi display∗2

Regulating port

P	1(P) port
A1	4(A) port (P controlled type, A port regulation)
B1	2(B) port (P controlled type, B port regulation)

Part numbers of mounting screw (For repairs)

SY3000: SY3000-23-12A (2 pcs.)
SY5000: SY5000-221-6A (2 pcs.)
SY7000: SY7000-221-6A (3 pcs.)

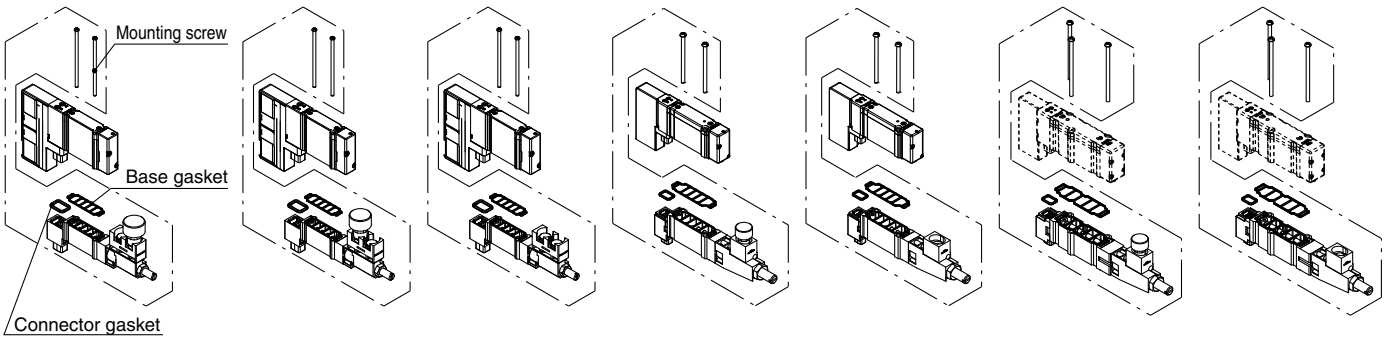

SY30M-05/N5-□ (With pressure gauge/ For odd number station)
SY30M-06/N6-□ (With pressure gauge/ For even number station)
SY30M-M1-□ (Without pressure gauge)
SY50M-00/N0-□ (With pressure gauge)
SY50M-M1-□ (Without pressure gauge)
SY70M-00/N0-□ (With pressure gauge)
SY70M-M1-□ (Without pressure gauge)

Specifications

Interface regulator model		SY30M-□-□-□	SY50M-□-□	SY70M-□-□
Applicable valve model∗1		SY3□$^{0}_{3}$□(R)	SY5□$^{0}_{3}$□(R)	SY7□$^{0}_{3}$□(R)
Regulating port		1(P), 4(A), 2(B)		
Set pressure range		0.1 to 0.7 MPa		
Maximum operating pressure		1.0 MPa		
Fluid		Air		
Ambient and fluid temperatures		–10 to 50°C (No freezing)		
Weight [g]∗2	With pressure gauge	33 (35)∗3	75	93
	Without pressure gauge	27 (29)∗3	69	87

∗1 3-position closed center and pressure center, and 4-position dual 3-port valves are only available for 1(P) port pressure regulation.

∗2 Gasket and mounting screws are included in the weight.

∗3 ( ): Denotes the values of SY30M-□-□-3

∗ Always apply pressure from 1(P) port in the base for interface regulator.

∗ When using in combination with the SY$^{5}_{7}$30$^{0}_{1}$□-□1-E (With residual pressure release valve), the length of the required mounting screws will differ. Please contact SMC for details.

Symbol

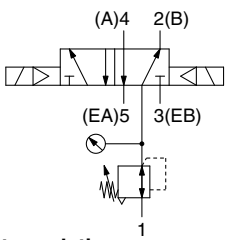

1(P) port regulation

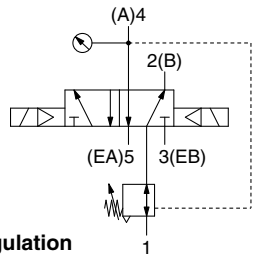

4(A) port regulation
(P controlled type, A port regulation)

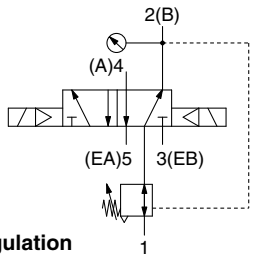

2(B) port regulation
(P controlled type, B port regulation)

⚠Caution

Tightening torque for mounting screw
M2: 0.16 N·m (SY3000)
M3: 0.8 N·m (SY5000/7000)

Manifold Options: Spacer Combinations and Screw List ①

Combination			① SY3000 (M2)		② SY5000 (M3)		③ SY7000 (M3)	
			Round head combination screw	Hexagon socket head cap screw	Round head combination screw	Hexagon socket head cap screw	Round head combination screw	Hexagon socket head cap screw
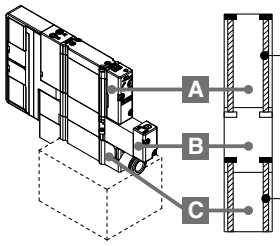 <Round head combination screw> ①: SY3000-23-24A ②: SY5000-221-1A ③: SY7000-221-1A <Hexagon socket head cap screw> ①: SY3000-222-1A ②: SY5000-222-1A ③: SY7000-221-1A ①: SY30M-56-2A ②: SY50M-56-2A ③: SY70M-56-2A	A	Valve	SY3000-23-24A [for 10 valves (20 pcs.)]	SY3000-222-1A [for 10 valves (20 pcs.)]	SY5000-221-1A [for 10 valves (20 pcs.)]	SY5000-222-1A [for 10 valves (20 pcs.)]	SY7000-221-1A [for 10 valves (30 pcs.)]	SY7000-222-1A [for 10 valves (30 pcs.)]
	B	SUP stop valve spacer assembly with residual pressure release valve	SY30M-56-2A (2 pcs.)		SY50M-56-2A (2 pcs.)		SY70M-56-2A (3 pcs.)	
	C	Individual SUP (EXH) spacer assembly						
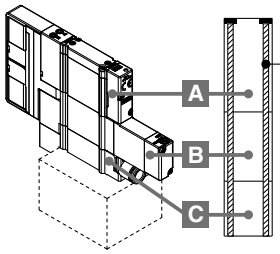 <Round head combination screw> ①: SY3000-23-33A ②: SY5000-221-5A ③: SY7000-221-5A	A	Valve	SY3000-23-33A (2 pcs.)	—	SY5000-221-5A (2 pcs.)	—	SY7000-221-5A (3 pcs.)	—
	B	Double check spacer assembly with residual pressure release valve						
	C	Individual SUP (EXH) spacer assembly						
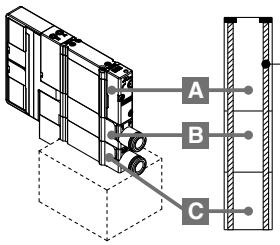 <Round head combination screw> ①: SY3000-23-32A ②: SY5000-221-3A ③: SY7000-221-3A	A	Valve	SY3000-23-32A (2 pcs.)	—	SY5000-221-3A (2 pcs.)	—	SY7000-221-3A (3 pcs.)	—
	B	Individual SUP (EXH) spacer assembly						
	C	Individual EXH (SUP) spacer assembly						
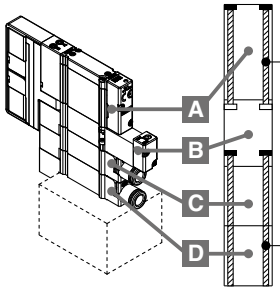 <Round head combination screw> ①: SY3000-23-24A ②: SY5000-221-1A ③: SY7000-221-1A <Hexagon socket head cap screw> ①: SY3000-222-1A ②: SY5000-222-1A ③: SY7000-222-1A ①: SY30M-56-4A ②: SY50M-56-4A ③: SY70M-56-4A	A	Valve	SY3000-23-24A [for 10 valves (20 pcs.)]	SY3000-222-1A [for 10 valves (20 pcs.)]	SY5000-221-1A [for 10 valves (20 pcs.)]	SY5000-222-1A [for 10 valves (20 pcs.)]	SY7000-221-1A [for 10 valves (30 pcs.)]	SY7000-222-1A [for 10 valves (30 pcs.)]
	B	SUP stop valve spacer assembly with residual pressure release valve	SY30M-56-4A (2 pcs.)		SY50M-56-4A (2 pcs.)		SY70M-56-4A (3 pcs.)	
	C	Individual SUP (EXH) spacer assembly						
	D	Individual EXH (SUP) spacer assembly						

∗ Mounting onto a manifold follows the order explained above.
∗ The fitting for individual SUP/EXH spacers comes in a straight type only, since an elbow type would interfere with each spacer assembly when laminated.

⚠Caution

Tightening torque for mounting screw
M2: 0.16 N·m (SY3000)
M3: 0.8 N·m (SY5000/7000)

Manifold Options: Spacer Combinations and Screw List ②

Combination			① SY3000 (M2)		② SY5000 (M3)		③ SY7000 (M3)	
			Round head combination screw	Hexagon socket head cap screw	Round head combination screw	Hexagon socket head cap screw	Round head combination screw	Hexagon socket head cap screw
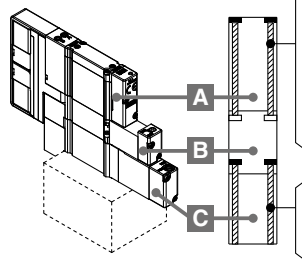 <Round head combination screw> ①: SY3000-23-24A ②: SY5000-221-1A ③: SY7000-221-1A <Hexagon socket head cap screw> ①: SY3000-222-1A ②: SY5000-222-1A ③: SY7000-222-1A ①: SY30M-56-3A ②: SY50M-56-3A ③: SY70M-56-3A	A	Valve	SY3000-23-24A [for 10 valves (20 pcs.)]	SY3000-222-1A [for 10 valves (20 pcs.)]	SY5000-221-1A [for 10 valves (20 pcs.)]	SY5000-222-1A [for 10 valves (20 pcs.)]	SY7000-221-1A [for 10 valves (30 pcs.)]	SY7000-222-1A [for 10 valves (30 pcs.)]
	B	SUP stop valve spacer assembly with residual pressure release valve	SY30M-56-3A (2 pcs.)		SY50M-56-3A (2 pcs.)		SY70M-56-3A (3 pcs.)	
	C	Double check spacer assembly with residual pressure release valve						
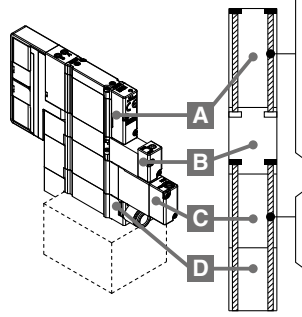 <Round head combination screw> ①: SY3000-23-24A ②: SY5000-221-1A ③: SY7000-221-1A <Hexagon socket head cap screw> ①: SY3000-222-1A ②: SY5000-222-1A ③: SY7000-222-1A ①: SY30M-56-5A ②: SY50M-56-5A ③: SY70M-56-5A	A	Valve	SY3000-23-24A [for 10 valves (20 pcs.)]	SY3000-222-1A [for 10 valves (20 pcs.)]	SY5000-221-1A [for 10 valves (20 pcs.)]	SY5000-222-1A [for 10 valves (20 pcs.)]	SY7000-221-1A [for 10 valves (30 pcs.)]	SY7000-222-1A [for 10 valves (30 pcs.)]
	B	SUP stop valve spacer assembly with residual pressure release valve	SY30M-56-5A (2 pcs.)		SY50M-56-5A (2 pcs.)		SY70M-56-5A (3 pcs.)	
	C	Double check spacer assembly with residual pressure release valve						
	D	Individual EXH (SUP) spacer assembly						
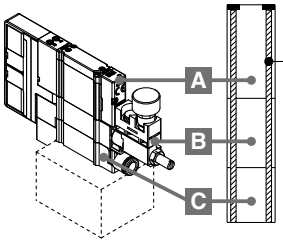 <Round head combination screw> ①: SY3000-23-32A ②: SY5000-221-7A ③: SY7000-221-7A	A	Valve	SY3000-23-32A (2 pcs.)	—	SY5000-221-7A (2 pcs.)	—	SY7000-221-7A (3 pcs.)	—
	B	Interface regulator						
	C	Individual SUP (EXH) spacer assembly						

* Mounting onto a manifold follows the order explained above.
* The fitting for individual SUP/EXH spacers comes in a straight type only, since an elbow type would interfere with each spacer assembly when laminated.
* When laminating an interface regulator with other options, only the combinations in the table above are possible.

⚠Caution

Tightening torque for mounting screw
M2: 0.16 N·m (SY3000)
M3: 0.8 N·m (SY5000/7000)

Manifold Options

* Refer to pages 215 to 218 for dimensions.

■ Individual SUP block assembly

On the circuit of the plug-in connector connection base, an individual SUP block assembly can be used to supply air to a series of valves if a separate air supply is required, or if addition air is required for additional air flow.

Individual SUP block assembly occupies 1 station.

Blocking disks also supplied (2 pieces). Can be used to block both sides of the number of stations being isolated for individual air supply (as shown in example).

* Specify the mounting position of the block as well as the position where the SUP passage is to be blocked on the manifold specification sheet. Blocking is required for 1 or 2 positions for 1 set. (2 SUP blocking disks to block SUP is attached to individual SUP block.)
* Electrical wiring is connected to a number of stations in the individual SUP block manifold.
* When used in M10/11/12 (mixed mounting type), select the SY50M type for SS5Y5 and the SY70M type for SS5Y7.
* A structure to prevent screws falling out is in place on the individual SUP block, making it much harder for the mounting screws to fall out.

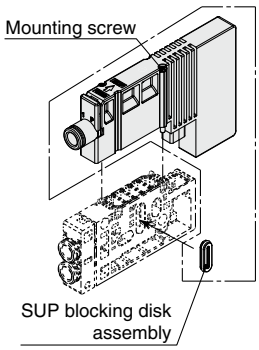

<Example>

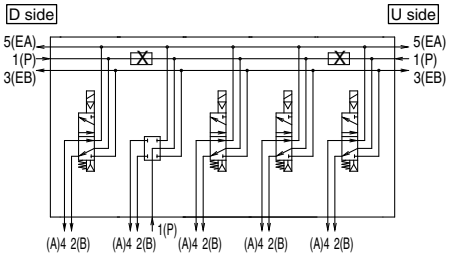

How to Order Individual SUP/EXH Block Assembly

One-touch fitting Straight type SY 3 0M – 78 – 1 A – C6

One-touch fitting Elbow type SY 3 0M – 78 – 2 A – L6

Series

3	SY3000
5	SY5000
7	SY7000

Block type

78	Individual SUP block
79	Individual EXH block

Individual SUP/EXH block assembly

2	Short elbow type (Type 12)
3	Long elbow type (Type 11)

* Long elbow type is for the SY5000/7000 only.

Port size (Metric/One-touch fittings)

Symbol	P, E port	SY3000	SY5000	SY7000
L4	ø4	●	●	—
L6	ø6	●	●	●
L8	ø8	—	●	●
L10	ø10	—	—	●
L12	ø12	—	—	●

Port size (Inch/One-touch fittings)

Symbol	P, E port	SY3000	SY5000	SY7000
LN3	ø5/32"	●	—	—
LN7	ø1/4"	●	●	—
LN9	ø5/16"	—	●	—
LN11	ø3/8"	—	—	●

Port size (Metric/One-touch fittings)

Symbol	P, E port	SY3000	SY5000	SY7000
C2	ø2	●	—	—
C3	ø3.2	●	—	—
C4	ø4	●	●	—
C6	ø6	●	●	●
C8	ø8	—	●	●
C10	ø10	—	—	●
C12	ø12	—	—	●

Port size (Inch/One-touch fittings)

Symbol	P, E port	SY3000	SY5000	SY7000
N1	ø1/8"	●	—	—
N3	ø5/32"	●	●	—
N7	ø1/4"	●	●	●
N9	ø5/16"	—	●	●
N11	ø3/8"	—	—	●

■ Individual EXH block assembly

On the circuit of the plug-in connector connection base, individual EXH block assembly can be used to individually exhaust series of valves when the exhaust from the valves would affect a number of other stations.

Individual EXH block assembly occupies 1 station.

Blocking disks also supplied (4 pieces). Can be used to block both sides of the number of stations being isolated for individual exhaust. (as shown in example).

* Specify the mounting position of the block as well as the position where the EXH passage is to be blocked on the manifold specification sheet. Blocking is required for 1 or 2 positions for 1 set. (2 sets of EXH blocking disks (4 pcs.) to block EXH is attached to individual EXH block.)
* Electrical wiring is connected to a number of stations in the individual EXH block manifold.
* When used in M10/11/12 (mixed mounting type), select the SY50M type for SS5Y5 and the SY70M type for SS5Y7.
* A structure to prevent screws falling out is in place on the individual EXH block, making it much harder for the mounting screws to fall out.

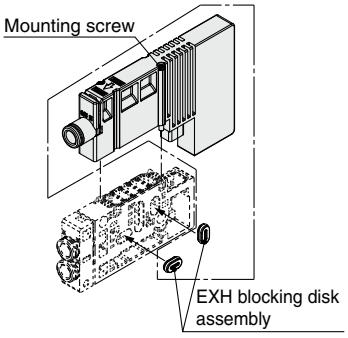

<Example>

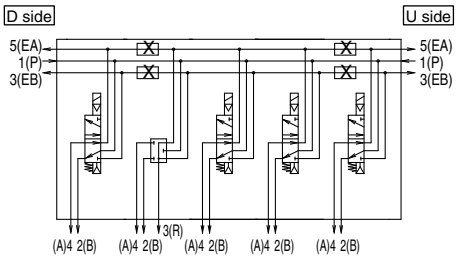

Manifold Options

■ Blanking Plate with Output [With two mounting screws]

The blanking plate extracts the individual signal of the manifold valve.

Specifications

Number of outputs	2 outputs
Load voltage	12 VDC, 24 VDC (Dependent on the rated voltage of the built-in manifold)
Load current	42 mA/point (Max.)
Enclosure	Dust proof (M12 connector: IP67)

∗ For serial transmission-capable manifolds, only the 24 VDC is applicable.
∗ When non-polar type valves are mounted on the same manifold (excludes SI unit manifolds), be careful of surge voltage intrusion. Refer to page 293 for details.

⚠ Caution

Tightening torque for mounting screw
M2: 0.16 N·m

Output Polarity

Manifold common specifications	A	B	COM.
Positive common	–	–	+
Negative common	+	+	–

∗ Specifications are the same as the manifold common specifications.

Without connector

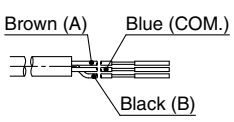

M12 connector

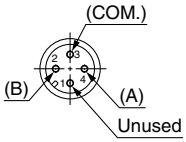

With connector

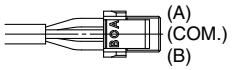

How to Order Blanking Plate with Output

SY 3 0M – 150 – 1A – □ – □

Series

3	SY3000

Cable length

Nil	300 mm
10	1000 mm

Connector type

Nil	1	2
Without connector	With M12 connector	With connector (For ZK2 vacuum unit)
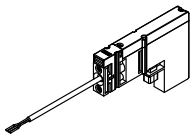	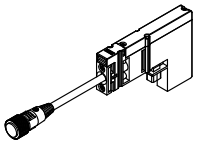	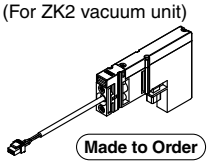 Made to Order

∗ Refer to the specifications for output polarity.

■ SUP/EXH blocking disk assembly (for connector type manifold, Type 10, 11, 12)

[SUP blocking disk]

By inserting the SUP blocking disk in the pressure supply passage of the manifold valve, can provide two different high and low pressure in one manifold.

[EXH blocking disk]

By inserting the EXH blocking disk in the exhaust passage of the manifold valve, can separate the exhaust from the valve so it does not affect the other valves. It can also be used for the manifold for the positive pressure and vacuum mixed manifold. (2 pcs. are required to block FA/EB both sides of the EXH.)

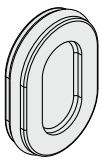

Series	SUP blocking disk assembly	EXH blocking disk assembly
SY3000	SY30M-40-1A	SY30M-40-2A
SY5000	SY50M-40-1A	SY50M-40-1A
SY7000	SY70M-40-1A	SY70M-40-1A

■ Label for blocking disk

Label to indicate and confirm on the manifold where the SUP/EXH blocking disk assemblies were inserted. (3 sheets each)

SUP/EXH blocking disk label

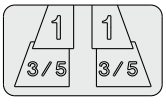

SUP blocking disk label

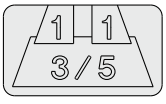

EXH blocking disk label

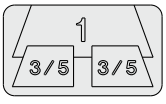

Series	Part no.
SY3000	SJ3000-155-1A
SY5000	
SY7000	

∗ If the blocking disk assembly is ordered using the manifold specification sheet and ordered at the same time as the manifold, the position where the blocking disk assembly is inserted will be labeled and shipped out.

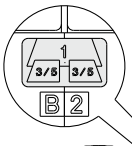

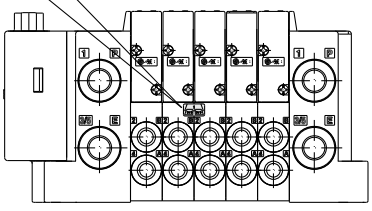

Manifold Options

■ Back pressure check valve assembly (Retrofit or pre-installed type)

It prevents cylinder malfunction caused by other valve exhaust entry. Insert it into EA/EB port (valve mounting side) on the manifold side of a valve which is affected. It is effective when a single-acting cylinder is used.

* When ordering assemblies incorporated with a manifold, refer to the Ordering Example below (when installed in all stations.)
* When a check valve for back pressure prevention is desired and is to be installed only in certain manifold stations, clearly indicate the part number and specify the mounting position on the manifold specification sheet.

<Precautions>

1. The manifold installed type back pressure check valve assembly is assembly parts with a check valve structure. However, since slight air leakage against the back pressure is allowed due to its structure, adverse effects of the back pressure due to increase in exhaust resistance cannot be prevented if the manifold exhaust port and other exhaust ports are put together for piping or if the piping diameter is narrowed. As a result, this may cause the actuator and air operated equipment to malfunction. So, be careful not to restrict the exhaust air. If the exhaust resistance becomes large, select a built-in valve type with rubber seal.
2. When the back pressure check valve assembly is mounted, please contact SMC for valve flow rate characteristics.

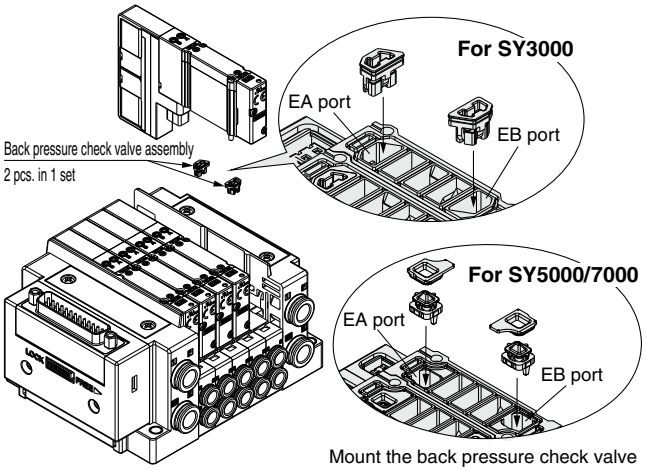

Mount the back pressure check valve assemblies on the EA and EB ports in the order shown in the figure above.

Series	Part no.
SY3000	SY30M-24-1A
SY5000	SY50M-24-1A
SY7000	SY70M-24-1A

Ordering Example

SS5Y3-10F1-05B-C6·····1 set (Type 10 5-station manifold base part no.)
***SY3201-5U1·····5 sets (2-position double part no.)**
***SY30M-24-1A·····5 sets (Back pressure check valve assembly part no.)**
└ The asterisk denotes the symbol for the assembly.

■ Dual flow fitting (for connector connecting base, Type 10, side ported)

This is a fitting for cylinder ports which enables simultaneous actuation and increase in flow rate of valves for 2 stations.

* When ordering assemblies incorporated into a manifold, refer to the Ordering Example below and specify on the manifold specification sheet.

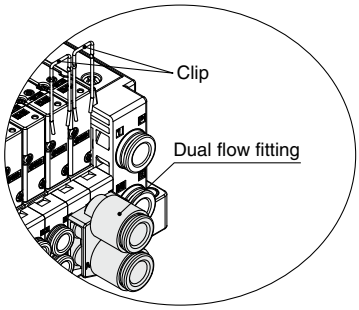

Ordering Example

SS5Y3-10F1-08B-CM
***SY3100-5U1**
***SY30M-120-1A-C8**
└ The asterisk denotes the symbol for the assembly.

How to Order Dual Flow Fitting

SY 3 0M − 120 − 1A − C8

Series

3	SY3000
5	SY5000

A, B port size (One-touch fittings)

Symbol	A, B port		SY3000	SY5000
C8	Metric size	ø8	●	—
C10		ø10	—	●
N9	Inch size	ø5/16"	●	—
N11		ø3/8"	—	●

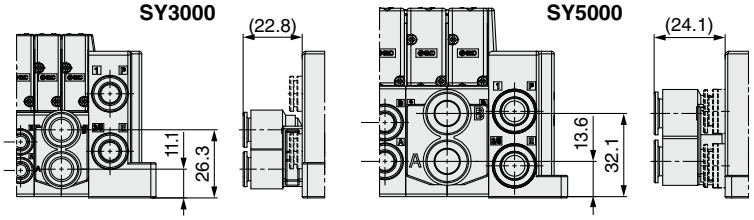

* Specifically for side porting for a connector connecting base Cannot be attached to bottom or top ported, or mixed mounting types that are metal or connector connecting bases
* When adding or changing clips, push them into the very end of the manifold for each station. Also, make sure to use the clip that was packed together, as the clip and the fitting for one station differ among products that can be used with the SY5000.
* Not available for the SY7000 series
* Refer to the table below to see which spacers are applicable.

Each type of spacer	Series	
	SY3000	**SY5000**
Individual SUP (EXH) spacer assembly	×	○
SUP stop valve spacer assembly with residual pressure release valve	×	○
Double check spacer assembly with residual pressure release valve	×	○
Interface regulator	×	×

○: Can be built in ×: Cannot be built in

■ Silencer (One-touch fitting connection type)

This silencer can be mounted to the 3/5 (E: EXH) port of the manifold in one step.

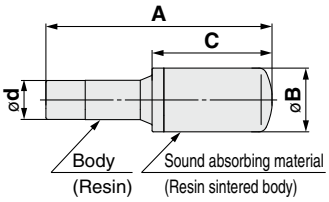

Series	Model	Effective area	A	B	C
For SY3000 (ø8)	**AN15-C08**	20 mm²	45	13	20
For SY5000 (ø10)	**AN20-C10**	30 mm²	57.5	16.5	30.5
For SY7000 (ø12)	**AN30-C12**	41 mm²	71.5	20	43.5

* Shipped together with the product

■ Plug

These are inserted in unused cylinder ports and P, E ports.

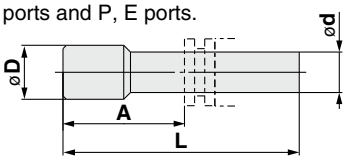

* Shipped together with the product

Dimensions

Applicable fitting size ø**d** (Metric size)	Model	A	L	øD
2	**KJP-02**	8.2	17	3
3.2	**KQ2P-23**	16	31.5	5
4	**KQ2P-04**	16	32	6
6	**KQ2P-06**	18	35	8
8	**KQ2P-08**	20.5	39	10
10	**KQ2P-10**	22	43	12
12	**KQ2P-12**	24	45.5	14

Applicable fitting size ø**d** (Inch size)	Model	A	L	øD
1/8"	**KQ2P-01**	16	31.5	5
5/32"	**KQ2P-03**	16	32	6
1/4"	**KQ2P-07**	18	35	8.5
5/16"	**KQ2P-09**	20.5	39	10
3/8"	**KQ2P-11**	22	43	11.5
1/2"	**KQ2P-13**	24	46	15

Manifold Options

A transparent plastic plate to put a label with the name of the function of the solenoid valve

■ Name plate (For connector connecting base)

SY3000: For SS5Y3-10 (Side ported)
SY5000: For SS5Y5-10/11 (Side/Bottom ported)
SY7000: For SS5Y7-(M)10/11 (Side/Bottom ported)

Name plate bracket assembly and name plate mounting instructions
Insert it into the groove on the name plate bracket onto which a SUP/EXH (end) block is mounted, as shown in Figure 2.

* When ordering assemblies incorporated with a manifold, refer to the Ordering Example below.

SS5Y3-10□□□-□□□-□□
SS5Y5-$^{10}_{11}$□□□-□□□-□□
SS5Y7-(M)$^{10}_{11}$□□□-□□□-□□

Mounting and Option

Symbol	Mounting option					
	Printing		DIN rail			Direct mounting
	Yes	No	With	Without	Specified length	
AA	●	—	—	—	—	●
A	●	—	●	—	—	—
A0	●	—	—	●	—	—
A3	●	—	—	—	For 3 stations	—
⋮	⋮	⋮	⋮	⋮	⋮	—
A24	●	—	—	—	For 24 stations	—
BA	—	●	—	—	—	●
B	—	●	●	—	—	—
B0	—	●	—	●	—	—
B3	—	●	—	—	For 3 stations	—
⋮	⋮	⋮	⋮	⋮	⋮	—
B24	—	●	—	—	For 24 stations	—

Ordering Example
SS5Y3-10F1-05UR-C6AA····· 1 set
***SY3200R-5U1**····· 5 sets
The asterisk denotes the symbol for the assembly.

* Name plates cannot be mounted onto Type 12 (Top ported) and Type 10 (Side ported) mixed mounting types with top ported valves, nor onto manifolds with optional laminated spacers.
* No name plate settings are available for the SY3000/SY5000 mixed mounting types. However, they are available for the SY5000/SY7000 mixed mounting types.

<SY3000>

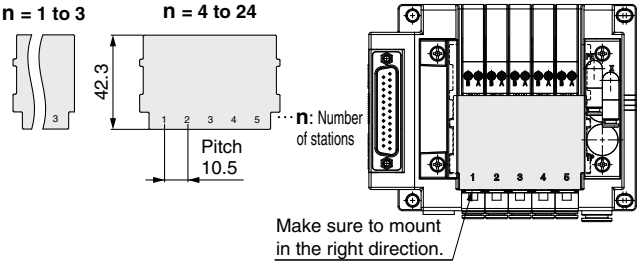

Tightening torque for mounting screw (M3): 0.8 N·m

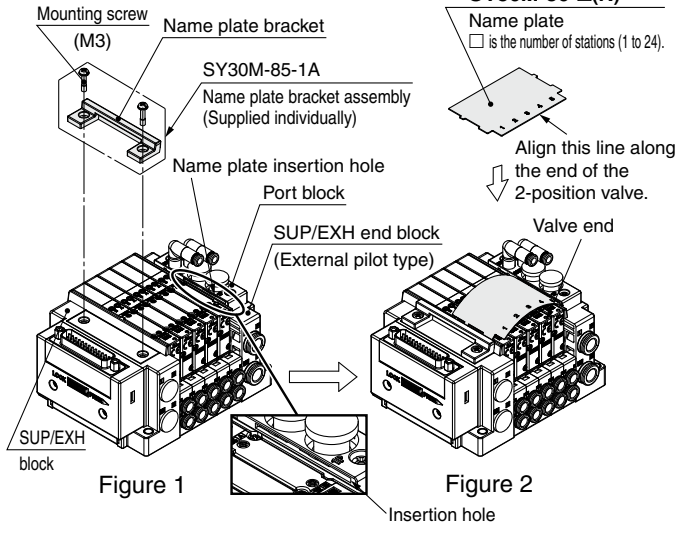

Figure 1

Figure 2

<SY5000/7000>

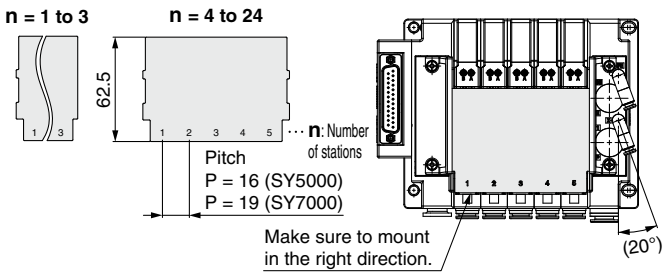

Tightening torque for mounting screw (M3): 0.8 N·m

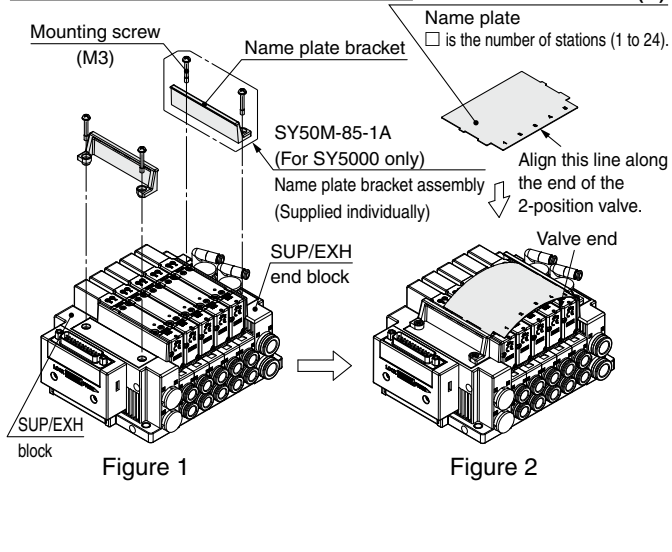

Figure 1

Figure 2

Manifold Options

* A transparent plastic plate to put a label with the name of the function of the solenoid valve

■ If adding a name plate

If adding a name plate to a manifold in use, order a name plate bracket assembly, in addition to ordering a name plate. Refer to the table below for the part number and the amount.

Name plate part number

Model		SS5Y3-10	SS5Y5-10/11	SS5Y7-(M)10/11	Note
Name plate	Printed	SY30M-86-□N	SY50M-86-□N	SY70M-86-□N	□: Number of stations (1 to 24)
	No printing	SY30M-86-□	SY50M-86-□	SY70M-86-□	

Name plate bracket assembly part number and number of items ordered

Model		SS5Y3-10	SS5Y5-10/11
Name plate assembly part number		SY30M-85-1A	SY50M-85-1A
Manifold SUP/EXH block assembly Pilot type and P, E port entry	Internal pilot U/D piping	2 pcs.	2 pcs.
	Internal pilot double sided piping	2 pcs.	
	External pilot U/D piping	1 pc.*1	
	External pilot double sided piping	Not required*1	

*1 If the manifold is an external pilot, an insertion slot for name plates is on the port block of the SUP/EXH block assembly. Thus, a bracket assembly is no longer required on the port piping side.

* Name plate bracket assembly is not required for the SY7000.

⚠ Caution

1. Be sure to shut off the power and air supplies before mounting the name plate bracket assembly. Furthermore, since air may remain inside the actuator, piping, and manifold, confirm that the air is completely exhausted before performing any work.
2. When disassembly and assembly are performed, air leakage may result if the tightening of the bracket mounting screws is inadequate.

Dimensions: Manifold Options/SY3000 Series

■ Blanking plate assembly

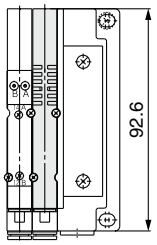

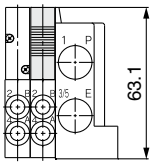

<Type 10, 12>

■ Individual SUP/EXH spacer assembly (Top ported)

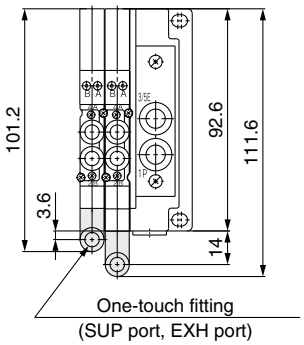

One-touch fitting
(SUP port, EXH port)
Applicable tubing O.D.: ø4, ø5/32"
: ø6, ø1/4"

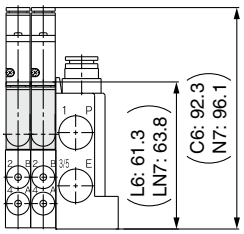

<Type 12>

■ Double check spacer assembly with residual pressure release valve

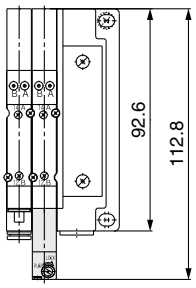

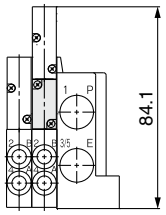

<Type 10>

■ Individual SUP/EXH block assembly (Top ported)

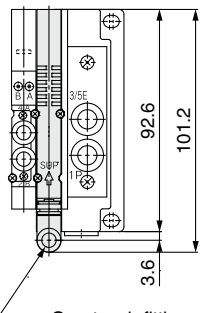

One-touch fitting
(SUP port, EXH port)
Applicable tubing O.D.: ø4, ø5/32"
: ø6, ø1/4"

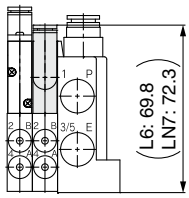

<Type 12>

■ Individual SUP/EXH spacer assembly (Side ported)

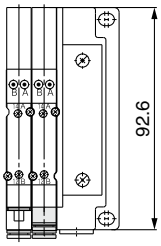

One-touch fitting
(SUP port, EXH port)
Applicable tubing O.D.: ø2
: ø3.2, ø1/8"
: ø4, ø5/32"
: ø6, ø1/4"

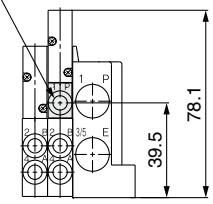

<Type 10>

■ SUP stop valve spacer assembly with residual pressure release valve

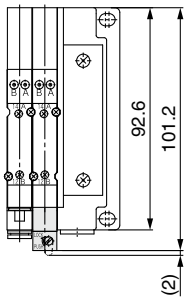

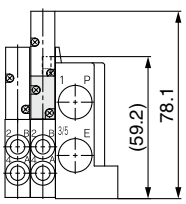

<Type 10, 12>

∗ The dimensions within ( ) apply to the SY30M-50-1AE.

■ Interface regulator

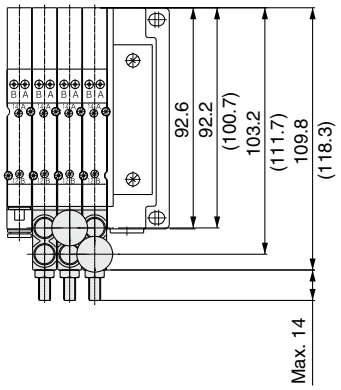

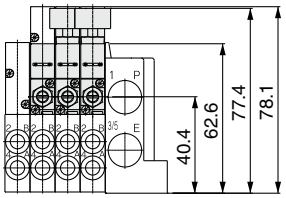

<Type 10, 12>

∗ The dimensions within ( ) apply to the SY30M-□-□-3.

■ Individual SUP/EXH block assembly (Side ported)

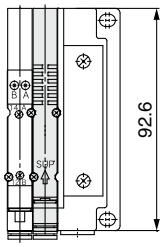

One-touch fitting
(SUP port, EXH port)
Applicable tubing O.D.: ø2
: ø3.2, ø1/8"
: ø4, ø5/32"
: ø6, ø1/4"

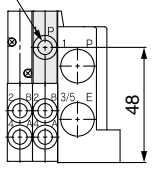

<Type 10>

Dimensions: Manifold Options/SY5000 Series

■ Blanking plate assembly

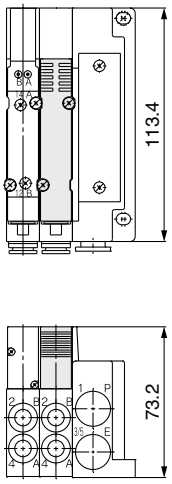

<Type 10, 11, 12>

■ Individual SUP/EXH spacer assembly (Top/Bottom ported)

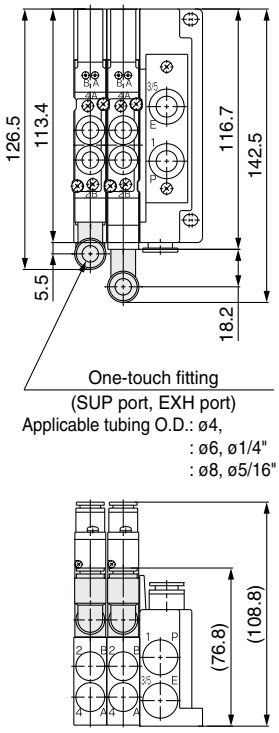

<Type 11, 12>

■ Double check spacer assembly with residual pressure release valve

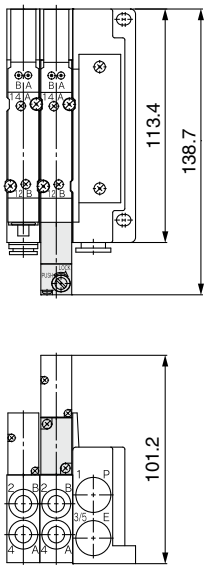

<Type 10, 11>

■ Individual SUP/EXH block assembly (Top ported)

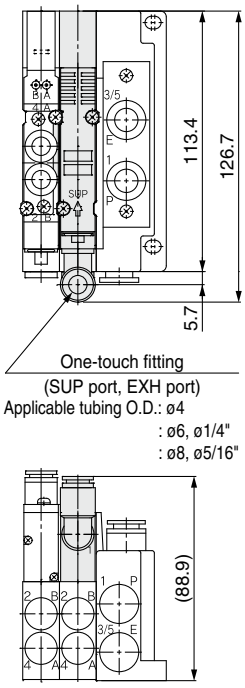

<Type 12>

■ Individual SUP/EXH block assembly (Side ported)

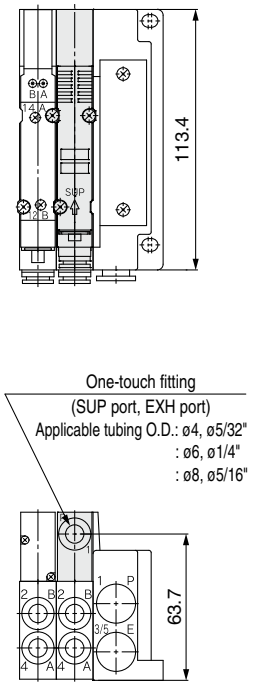

<Type 10>

■ Individual SUP/EXH spacer assembly (Side ported)

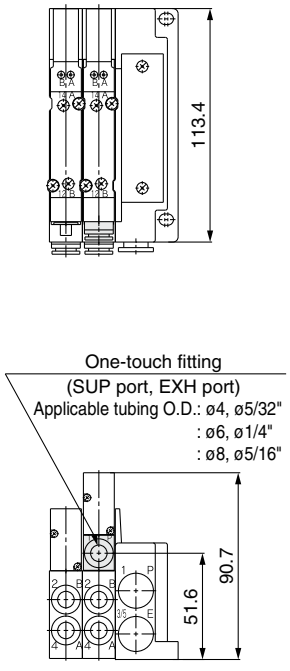

<Type 10>

■ SUP stop valve spacer assembly with residual pressure release valve

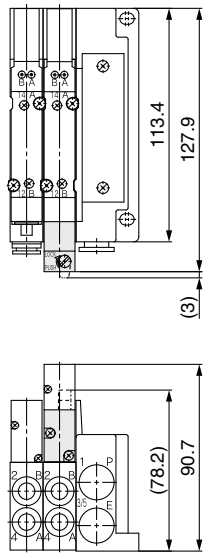

<Type 10, 11, 12>

∗ The dimensions within ( ) apply to the SY50M-50-1AE.

■ Interface regulator

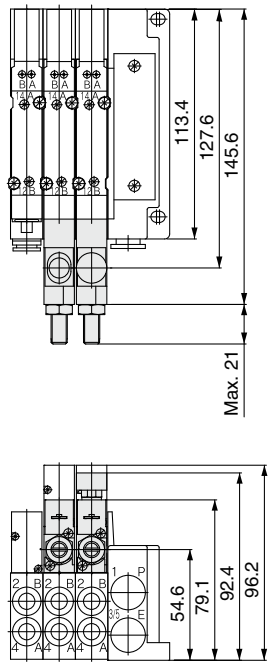

<Type 10, 11, 12>

■ Individual SUP/EXH block assembly (Side ported)

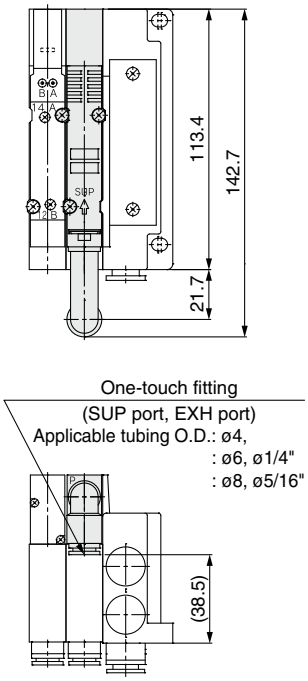

<Type 11>

Dimensions: Manifold Options/SY7000 Series

■ Blanking plate assembly

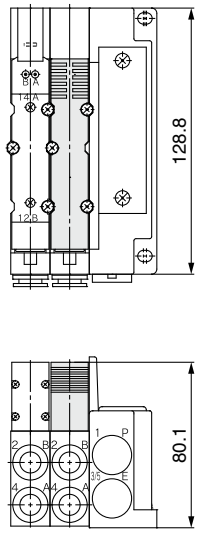

<Type 10, 11, 12>

■ Individual SUP/EXH spacer assembly (Top/Bottom ported)

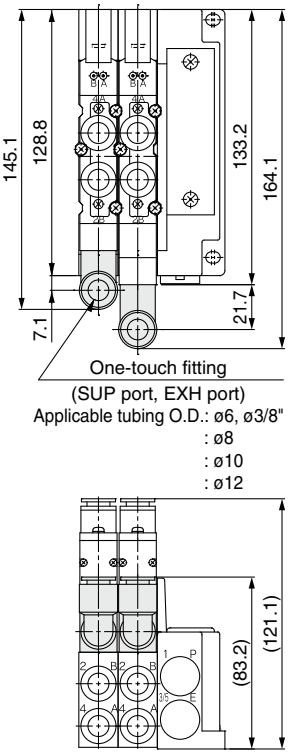

<Type 11, 12>

■ Double check spacer assembly with residual pressure release valve

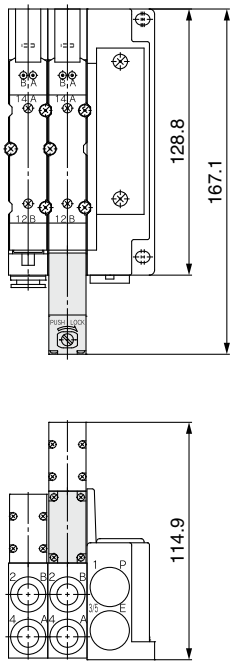

<Type 10, 11>

■ Individual SUP/EXH block assembly (Top ported)

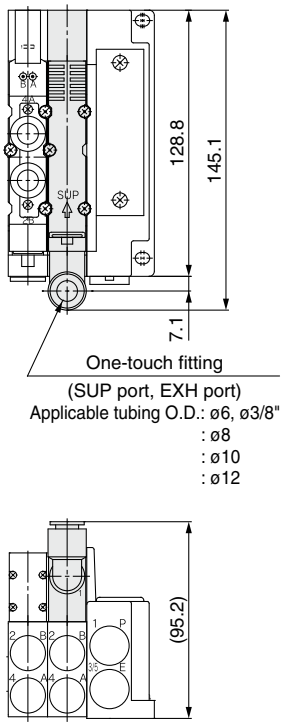

<Type 12>

■ Individual SUP/EXH spacer assembly (Side ported)

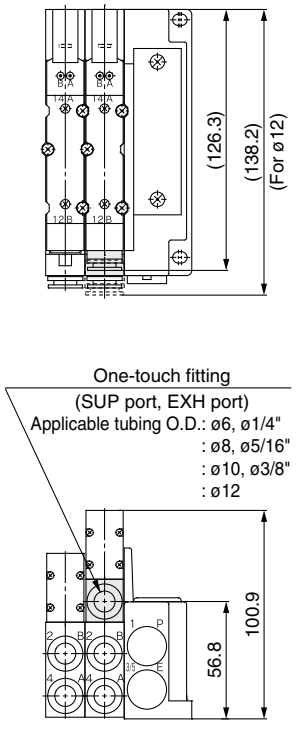

<Type 10>

■ SUP stop valve spacer assembly with residual pressure release valve

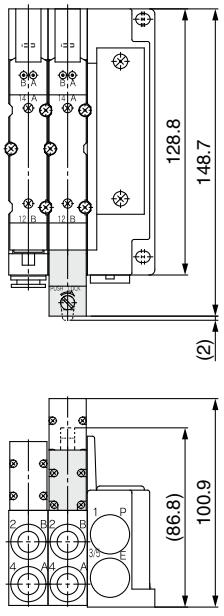

<Type 10, 11, 12>

∗ The dimensions within ( ) apply to the SY70M-50-1AE.

■ Individual SUP/EXH block assembly (Side ported)

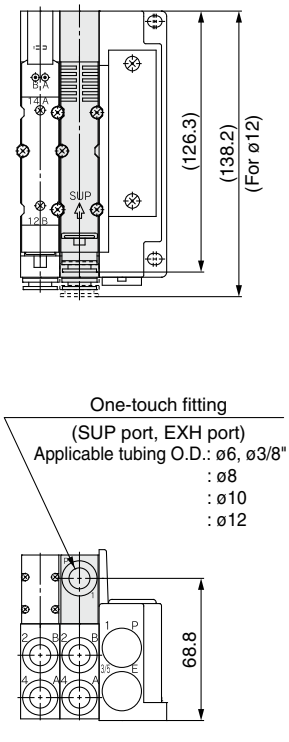

<Type 10>

Dimensions: Manifold Options/SY7000 Series

■ Interface regulator

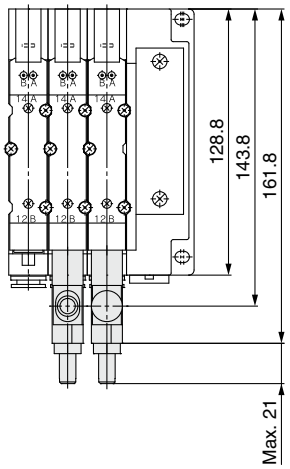

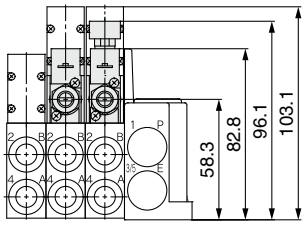

<Type 10, 11, 12>

■ Individual SUP/EXH block assembly (Bottom ported)

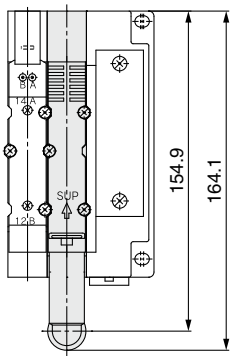

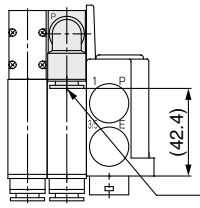

<Type 11>

One-touch fitting
(SUP port, EXH port)
Applicable tubing O.D.: ø8, ø3/8"
: ø10
: ø12

Plug-in Metal Base

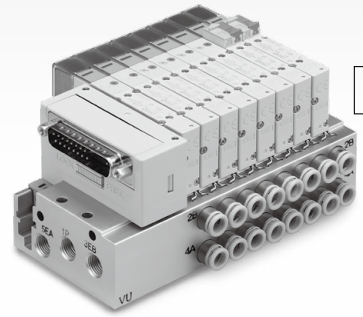

Side ported

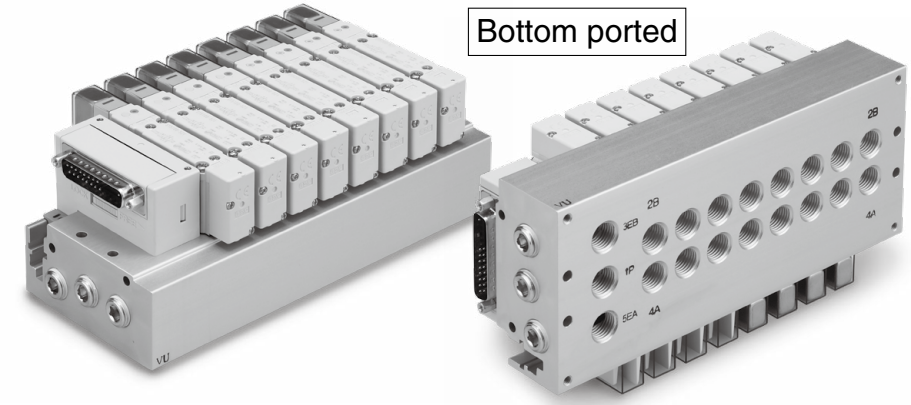

Bottom ported

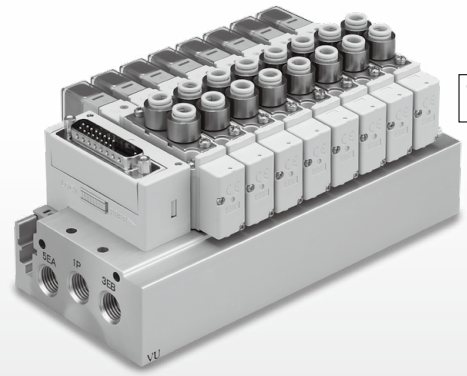

Top ported

SY3000/5000/7000 Series Type 50, 51, 52

Plug-in Metal Base

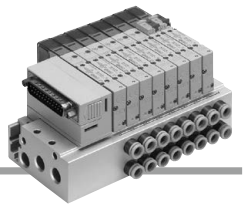

Manifold Specifications

Model			D-sub connector	Flat ribbon cable			Serial wiring
			F type	P type	PG type	PH type	S5 type (EX510)
Manifold type			Plug-in metal base				
SUP/EXH port type			Common SUP/EXH				
Valve stations	**All double wiring**		2 to 12 stations		2 to 9 stations	2 to 4 stations	2 to 8 stations
	All single wiring				2 to 12 stations	2 to 8 stations	2 to 12 stations
Applicable connector			D-sub connector Conforming to MIL-C-24308 JIS-X-5101	Flat ribbon cable connector with strain relief Conforming to MIL-C-83503			—
				Socket: 26 pins MIL type	Socket: 20 pins MIL type	Socket: 10 pins MIL type	
Internal wiring			Positive common, Negative common				
Port size	**1(P), 3/5(E) port**	**SY3000**	1/8				
		SY5000	1/4				
		SY7000	3/8				
	4(A), 2(B) port	**SY3000**	M5 x 0.8, 1/8 ø2 One-touch fitting, ø3.2 One-touch fitting, ø4 One-touch fitting, ø6 One-touch fitting ø1/8" One-touch fitting, ø5/32" One-touch fitting, ø1/4" One-touch fitting				
		SY5000	1/8, 1/4 ø4 One-touch fitting, ø6 One-touch fitting, ø8 One-touch fitting ø5/32" One-touch fitting, ø1/4" One-touch fitting, ø5/16" One-touch fitting				
		SY7000	1/4 ø6 One-touch fitting, ø8 One-touch fitting, ø10 One-touch fitting, ø12 One-touch fitting ø1/4" One-touch fitting, ø5/16" One-touch fitting, ø3/8" One-touch fitting				
Enclosure (Based on IEC60529)			IP40				IP20

Manifold Flow Rate Characteristics*1/Manifold Weight

Valve Seal Type: Rubber Seal

Model	Port size		Valve flow rate characteristics				Weight: W [g]*2 (n: stations)	
	1, 5, 3 (P, EA, EB)	4, 2 (A, B)	1→4/2 (P→A/B)		4/2→5/3 (A/B→E)			
			C [dm³/(s·bar)]	b	C [dm³/(s·bar)]	b	Fixed: C□	Replaceable: KC□
SS5Y3-50 (Side ported)	1/8	C6	1.1	0.19	1.1	0.15	39n + 247	43.5n + 247
SS5Y3-51 (Bottom ported)	1/8	C6	1.2	0.31	1.2	0.14	41.5n + 251	48.5n + 251
SS5Y3-52 (Top ported)	1/8	C6	1.1	0.29	1.2	0.20	44n + 247	
SS5Y5-50 (Side ported)	1/4	C8	2.6	0.28	2.6	0.14	93n + 379	110n + 379
SS5Y5-51 (Bottom ported)	1/4	C8	2.7	0.35	2.8	0.20	93n + 413	113n + 413
SS5Y5-52 (Top ported)	1/4	C8	2.6	0.26	3.1	0.13	103n + 379	
SS5Y7-50 (Side ported)	3/8	C10	3.8	0.27	4.0	0.20	144n + 510	158n + 510
SS5Y7-51 (Bottom ported)	3/8	C10	4.1	0.34	4.8	0.20	150n + 549	172n + 549
SS5Y7-52 (Top ported)	3/8	C10	4.5	0.27	4.9	0.24	164n + 510	

Valve Seal Type: Metal Seal

Model	Port size		Valve flow rate characteristics				Weight: W [g]*2 (n: stations)	
	1, 5, 3 (P, EA, EB)	4, 2 (A, B)	1→4/2 (P→A/B)		4/2→5/3 (A/B→E)			
			C [dm³/(s·bar)]	b	C [dm³/(s·bar)]	b	Fixed: C□	Replaceable: KC□
SS5Y3-50 (Side ported)	1/8	C6	0.9	0.14	1.0	0.12	39n + 247	43.5n + 247
SS5Y3-51 (Bottom ported)	1/8	C6	1.0	0.21	1.1	0.10	41.5n + 251	48.5n + 251
SS5Y3-52 (Top ported)	1/8	C6	1.1	0.15	1.1	0.14	44n + 247	
SS5Y5-50 (Side ported)	1/4	C8	2.2	0.20	2.3	0.13	93n + 379	110n + 379
SS5Y5-51 (Bottom ported)	1/4	C8	2.4	0.26	2.5	0.16	93n + 413	113n + 413
SS5Y5-52 (Top ported)	1/4	C8	2.4	0.18	2.6	0.12	103n + 379	
SS5Y7-50 (Side ported)	3/8	C10	3.2	0.23	3.5	0.18	144n + 510	158n + 510
SS5Y7-51 (Bottom ported)	3/8	C10	3.5	0.25	4.0	0.16	150n + 549	172n + 549
SS5Y7-52 (Top ported)	3/8	C10	3.5	0.21	3.8	0.18	164n + 510	

*1 The value is for manifold base with 5 stations and individually operated 2-position type.
*2 Weight: W is the value for the D-sub connector manifold.
To obtain the weight with valves attached, add the valve weights given on page 17 for the appropriate number of stations.

* Calculation of effective area S and sonic conductance C: S = 5.0 x C

Type 50
Side Ported

Type 51
Bottom Ported

Plug-in Metal Base

D-sub Connector | Flat Ribbon Cable

SY3000/5000/7000 Series

How to Order Manifolds

SS5Y 3 – 50 F 1 – □ 05 D – C6 □ □

❶ ❷ ❸ ❹ ❺ ❻ ❼ ❽ ❾ ❿

❶ Series

3	SY3000
5	SY5000
7	SY7000

❷ Type

50	Side ported
51	Bottom ported
50R	Side ported, External pilot

∗ External pilot is not available for the bottom-ported type.

❸ Connector type

F: D-sub connector (25 pins)

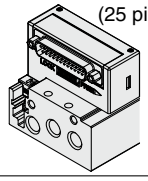

P: Flat ribbon cable (26 pins)

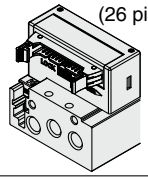

PG: Flat ribbon cable (20 pins)

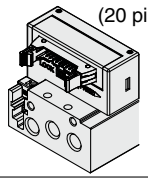

PH: Flat ribbon cable (10 pins)

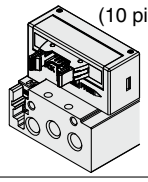

❹ Connector entry direction

1: Upward

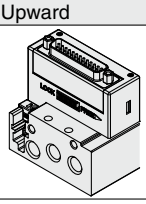

2: Lateral

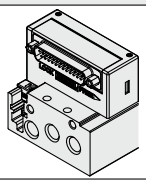

❺ Wiring type

Nil	All double wiring∗1
S	All single wiring∗2

∗1 All double wiring: 2-position single, double, 3-position, and 4-position valves can be used on all manifold stations.

∗2 All single wiring: Available only for the manifold which has 2-position single for all stations
Note that 2-position double, 3-, or 4-position valves cannot be used.

∗ If a mix of single and double wiring is required, it is supplied as a special order.

❻ Valve stations

F: D-sub connector (25 pins)

Symbol	Stations	Note
02	2 stations	All double wiring
⋮	⋮	
12	12 stations	
02	2 stations	All single wiring
⋮	⋮	
12	12 stations	

P: Flat ribbon cable (26 pins)

Symbol	Stations	Note
02	2 stations	All double wiring
⋮	⋮	
12	12 stations	
02	2 stations	All single wiring
⋮	⋮	
12	12 stations	

PG: Flat ribbon cable (20 pins)

Symbol	Stations	Note
02	2 stations	All double wiring
⋮	⋮	
09	9 stations	
02	2 stations	All single wiring
⋮	⋮	
12	12 stations	

PH: Flat ribbon cable (10 pins)

Symbol	Stations	Note
02	2 stations	All double wiring
⋮	⋮	
04	4 stations	
02	2 stations	All single wiring
⋮	⋮	
08	8 stations	

∗ This also includes the number of the blanking plate assembly.

How to Order Manifold Assembly

Example (SS5Y3-50F2-□)

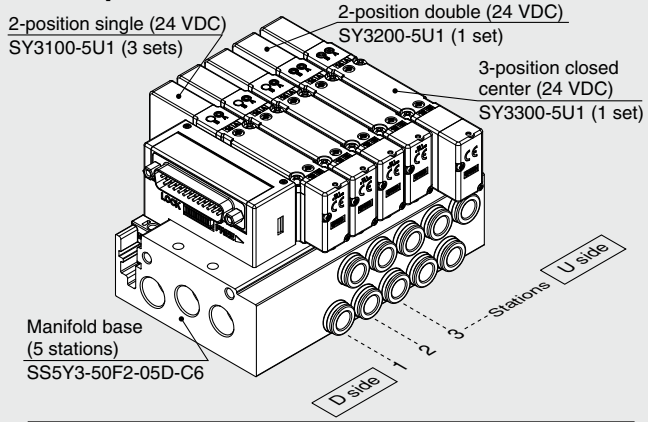

SS5Y3-50F2-05D-C6 ··· 1 set (Type 50 5-station manifold base part no.)
∗SY3100-5U1 ····· 3 sets (2-position single part no.)
∗SY3200-5U1 ····· 1 set (2-position double part no.)
∗SY3300-5U1 ····· 1 set (3-position closed center part no.)
→The asterisk denotes the symbol for the assembly. Prefix it to the part numbers of the valve, etc.

- For the valve arrangement, the valve closest to the D side is considered the 1st station.
- Under the manifold part number, state the valves to be mounted in order starting with the 1st station as shown in the figure above. If the arrangement becomes too complicated, specify the details on a manifold specification sheet.

∗ When mixing top-ported configurations, select from those listed on page 244. In such cases, use caution as there is also output on the A and B ports on the base side. Specify on the manifold specification sheet if plugs are required for the A and B ports on the base side.

❼ P, E port entry

U	U side*1
D	D side*1*2
B	Both sides

*1 Plugs are mounted on the opposite side of the selected ports.
*2 Only D side is available for the type 51 bottom-ported type.

❾ Thread type

Nil	Rc
F	G
N	NPT
T	NPTF

❿ Mounting

Nil	Direct mounting	
D	DIN rail mounting (With DIN rail)	
D0	DIN rail mounting (Without DIN rail)	
D3	For 3 stations	Specify a length longer than that of the standard rail.
⋮	⋮	
D12	For 12 stations	

* Only direct mounting is available for the type 51 bottom-ported type.
* Refer to page 295 for the fixation of DIN rail mounting type manifold.

❽ A, B port size

Thread piping

Symbol	A, B port	SY3000	SY5000	SY7000
M5	M5 x 0.8	●	—	—
01	1/8	●	●	—
02	1/4	—	●	●

One-touch fitting (Metric)

Symbol		A, B port	SY3000	SY5000	SY7000
Fixed	**C2**	ø2	●	—	—
	C3	ø3.2	●	—	—
	C4	ø4	●	●	—
	C6	ø6	●	●	—
	C8	ø8	—	●	●
	C10	ø10	—	—	●
Replaceable	**KC2**	ø2	●	—	—
	KC3	ø3.2	●	—	—
	KC4	ø4	●	●	—
	KC6	ø6	●	●	●
	KC8	ø8	—	●	●
	KC10	ø10	—	—	●
	KC12	ø12	—	—	●
	M*1	Mixed sizes	●	●	●
P, E port size (Thread piping)			1/8	1/4	3/8

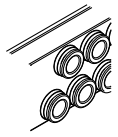

Type 50 (Side ported)

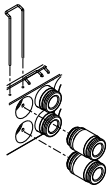

Type 51 (Bottom ported)

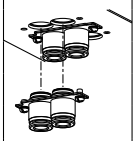

One-touch fitting (Inch)

Symbol		A, B port	SY3000	SY5000	SY7000
Fixed	**N1**	ø1/8"	●	—	—
	N3	ø5/32"	●	●	—
	N7	ø1/4"	●	●	—
	N9	ø5/16"	—	●	●
	N11	ø3/8"	—	—	●
Replaceable	**KN1**	ø1/8"	●	—	—
	KN3	ø5/32"	●	●	—
	KN7	ø1/4"	●	●	●
	KN9	ø5/16"	—	●	●
	KN11	ø3/8"	—	—	●
	M*1	Mixed sizes	●	●	●
P, E port size (Thread piping)			1/8	1/4	3/8

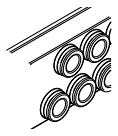

Type 50 (Side ported)

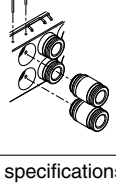

Type 51 (Bottom ported)

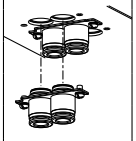

*1 When ports are of mixed sizes, indicate the piping specifications on the manifold specification sheet.

Protective class class Ⅲ (Mark: ⧾)

How to Order Valves (With mounting screw)

Refer to page 15 for valve specifications.

SY 3 1 0 0 □ □ □ □ – 5 □ □ 1 – □

❶ ❷ ❸ ❹ ❺ ❻ ❼ ❽ ❾ ❿ ⓫

❸ Base mounted

❶ Series

3	SY3000
5	SY5000
7	SY7000

❷ Type of actuation

1	2-position	Single
2		Double
3	3-position	Closed center
4		Exhaust center
5		Pressure center
A*1	4-position dual 3-port	N.C./N.C.
B*1		N.O./N.O.
C*1		N.C./N.O.

*1 Only the rubber seal type is available for the 4-position dual 3-port valve.

❸ Seal type

0	Rubber seal
1	Metal seal

❹ Pilot type

Nil	Internal pilot
R	External pilot

❺ Back pressure check valve (Built-in valve type)

Nil	None
H	Built-in

* Only the rubber seal type is available.
* The back pressure check valve is not available for the 3-position type or the SY7000.

❻ Pilot valve option

Nil	Standard (0.7 MPa)
B	Quick response type (0.7 MPa)
K*1	High pressure type (1.0 MPa)

*1 Only the metal seal type is available for the high pressure type.

❼ Coil type

Nil	Standard
T	With power saving circuit (Continuous duty type)

* Be sure to select the power saving circuit type if the valve is to be continuously energized for long periods of time.
* Be careful of the energizing time when the power saving circuit is selected. Refer to page 292 for details.

❽ Rated voltage

5	24 VDC
6	12 VDC

❾ Light/surge voltage suppressor and common specification

Symbol	With light	Surge voltage suppressor	Common specification
Nil	—	—	Non-polar
R	—	●	
U	●		
S	—		Positive common
Z	●		
NS	—		Negative common
NZ	●		

* For the non-polar type, be careful of surge voltage intrusion. Refer to page 293 for details.
* Only "Z" and "NZ" types are available with a power saving circuit.

❿ Manual override

Nil: Non-locking push type

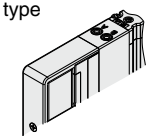

D: Push-turn locking slotted type

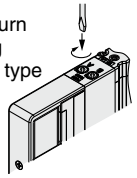

E: Push-turn locking lever type

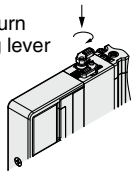

F: Slide locking type

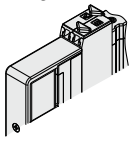

* Refer to page 34 for the safety slide locking manual override.

⓫ Type of mounting screw

Nil	Round head combination screw
B	Hexagon socket head cap screw
K	Round head combination screw (Drop prevention type)
H	Hexagon socket head cap screw (Drop prevention type)

* For "K" and "H," the valve body cover has a drop prevention construction to stop the mounting screws from falling out when the valve is removed for maintenance, etc.
* **When ordering a valve individually, the base gasket is not included.**
  Since the base gasket is attached to the manifold, please order the base gasket separately if it is needed for maintenance. Refer to page 266 for base gasket and mounting screw part numbers.
* "B" and "H" cannot be selected for the individual SUP/EXH spacer assembly, interface regulator, or double check spacer assembly with residual pressure release valve.

⚠ Protective class class Ⅲ (Mark: ⧫)

Plug-in Metal Base | Type 50/Side Ported | D-sub Connector

Dimensions: SY3000 Series

SS5Y3-50(R)F$^{1}_{2}$-Stations $^{U}_{B}$-$^{M5}_{KC\square, KN\square}$ □(D)

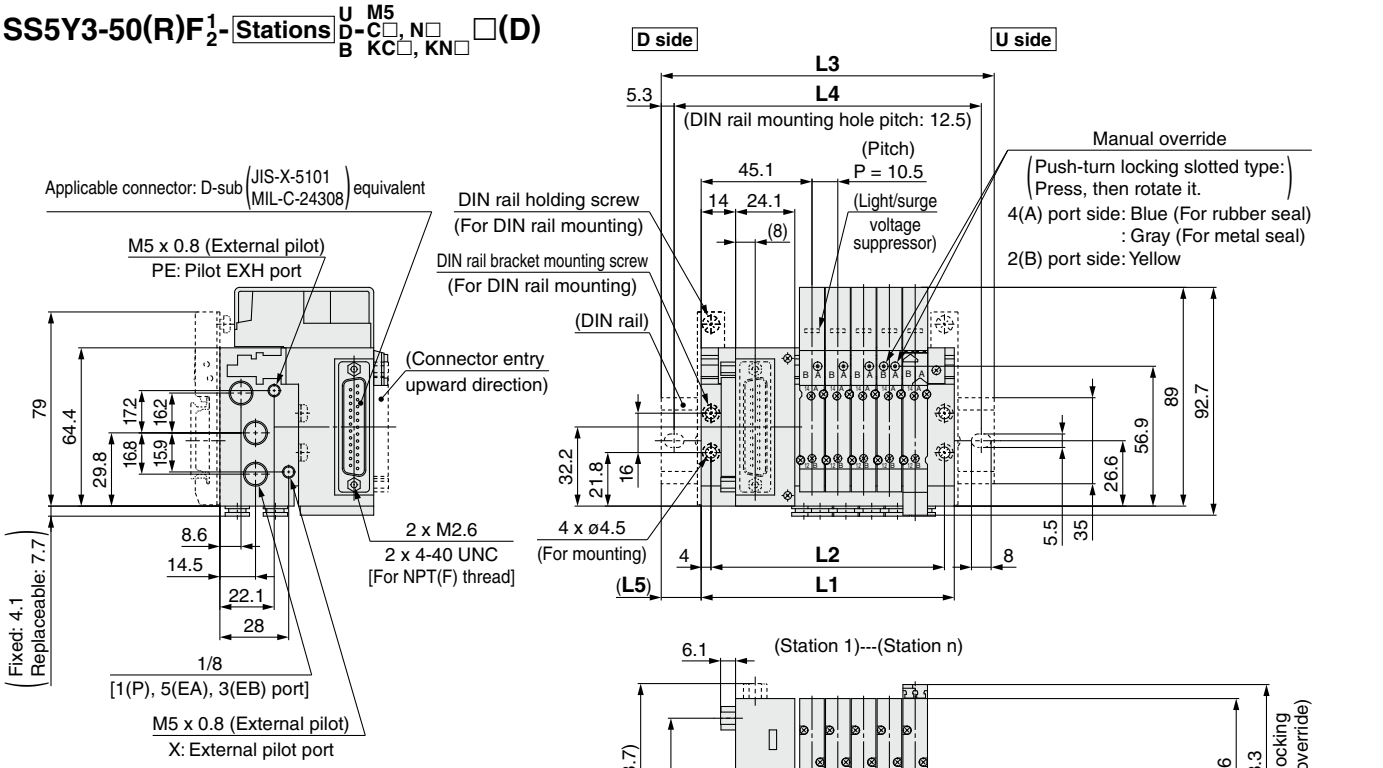

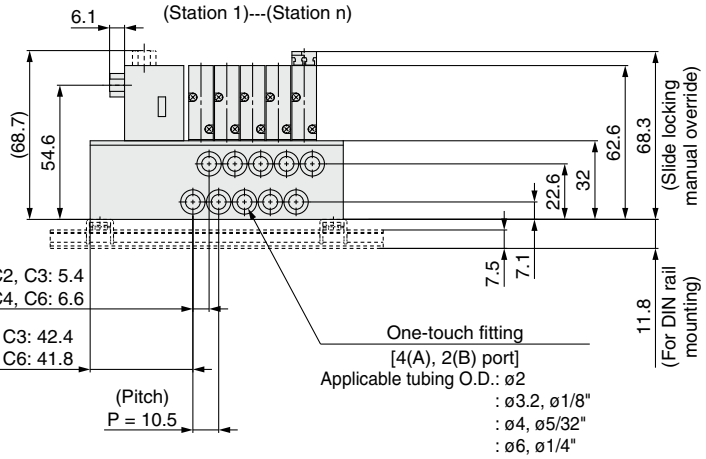

∗ These figures show the "SS5Y3-50F2-05B-C6."

50RF$^{1}_{2}$-Stations $^{U}_{D}$

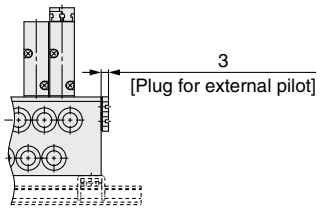

∗ The drawing above shows when P, E port entry is D.

Port size M5

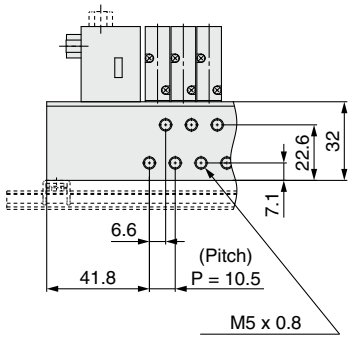

One-touch fitting (Replaceable)

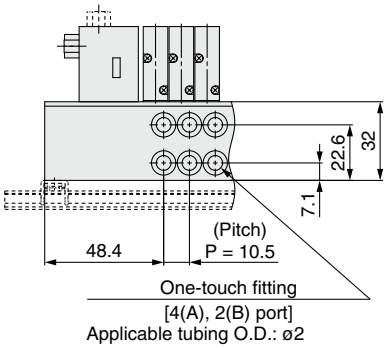

n: Stations	2	3	4	5	6	7	8	9	10	11	12
L1	71.5	82	92.5	103	113.5	124	134.5	145	155.5	166	176.5
L2	63.5	74	84.5	95	105.5	116	126.5	137	147.5	158	168.5
L3	98	110.5	123	135.5	148	160.5	160.5	173	185.5	198	210.5
L4	87.5	100	112.5	125	137.5	150	150	162.5	175	187.5	200
L5	13.5	14.5	15.5	16.5	17.5	18.5	13	14	15	16	17

Plug-in Metal Base | Type 50/Side Ported | D-sub Connector

Dimensions: SY3000 Series

SS5Y3-50(R)F$^{1}_{2}$-Stations$^{U}_{B}$-01□(D)

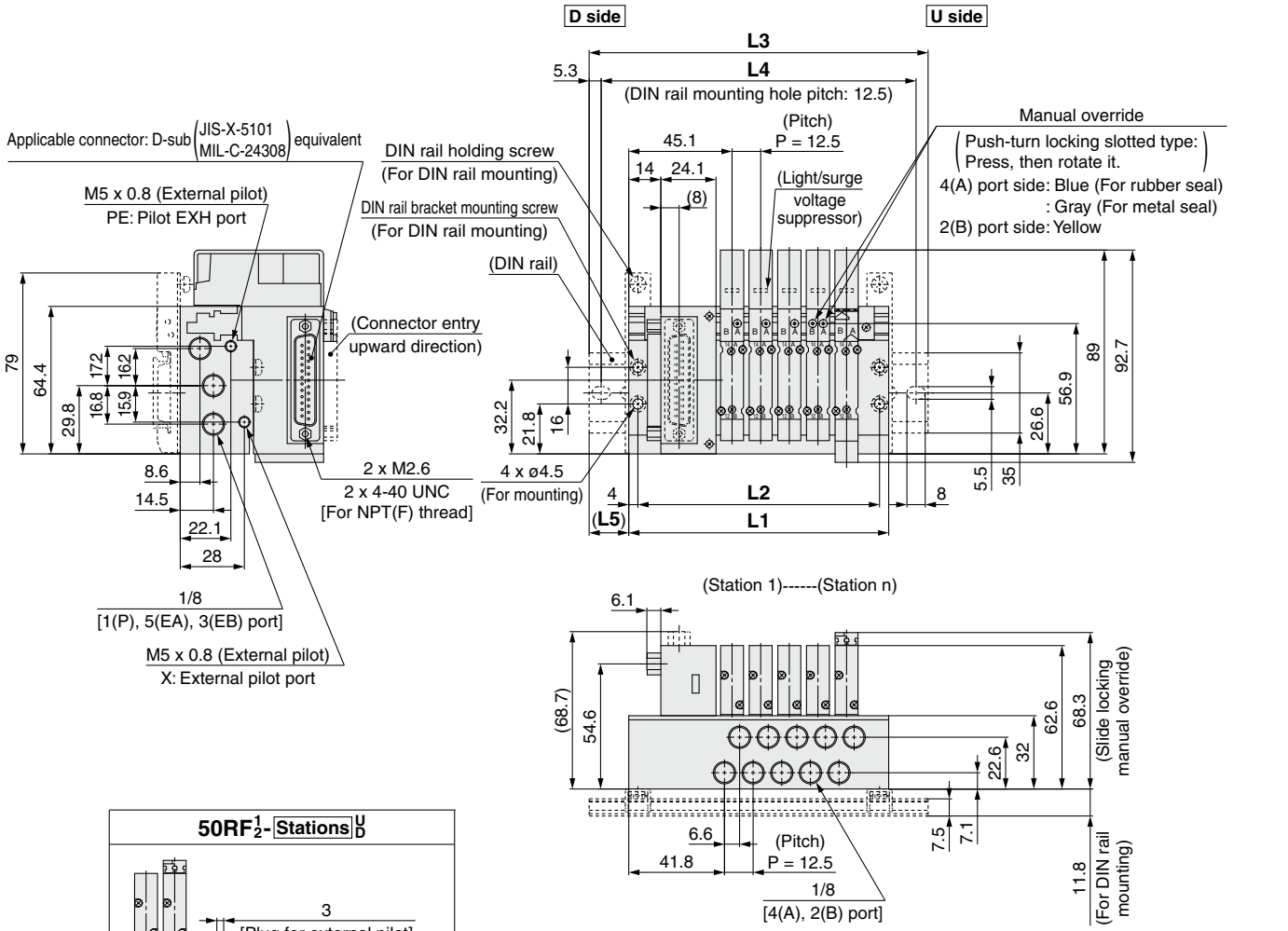

50RF$^{1}_{2}$-Stations$^{U}_{D}$

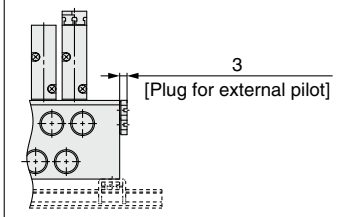

∗ The drawing above shows when P, E port entry is D.

∗ These figures show the “SS5Y3-50F2-05B-01.”

n: Stations	2	3	4	5	6	7	8	9	10	11	12
L1	76	88.5	101	113.5	126	138.5	151	163.5	176	188.5	201
L2	68	80.5	93	105.5	118	130.5	143	155.5	168	180.5	193
L3	110.5	123	135.5	148	160.5	173	185.5	198	210.5	223	235.5
L4	100	112.5	125	137.5	150	162.5	175	187.5	200	212.5	225
L5	17.5	17.5	17.5	17.5	17.5	17.5	17.5	17.5	17.5	17.5	17.5

Dimensions: SY5000 Series

SS5Y5-50(R)F$^{1}_{2}$-Stations$^{U}_{D}$-$^{01}_{B}$C□, N□ KC□, KN□ □(D)

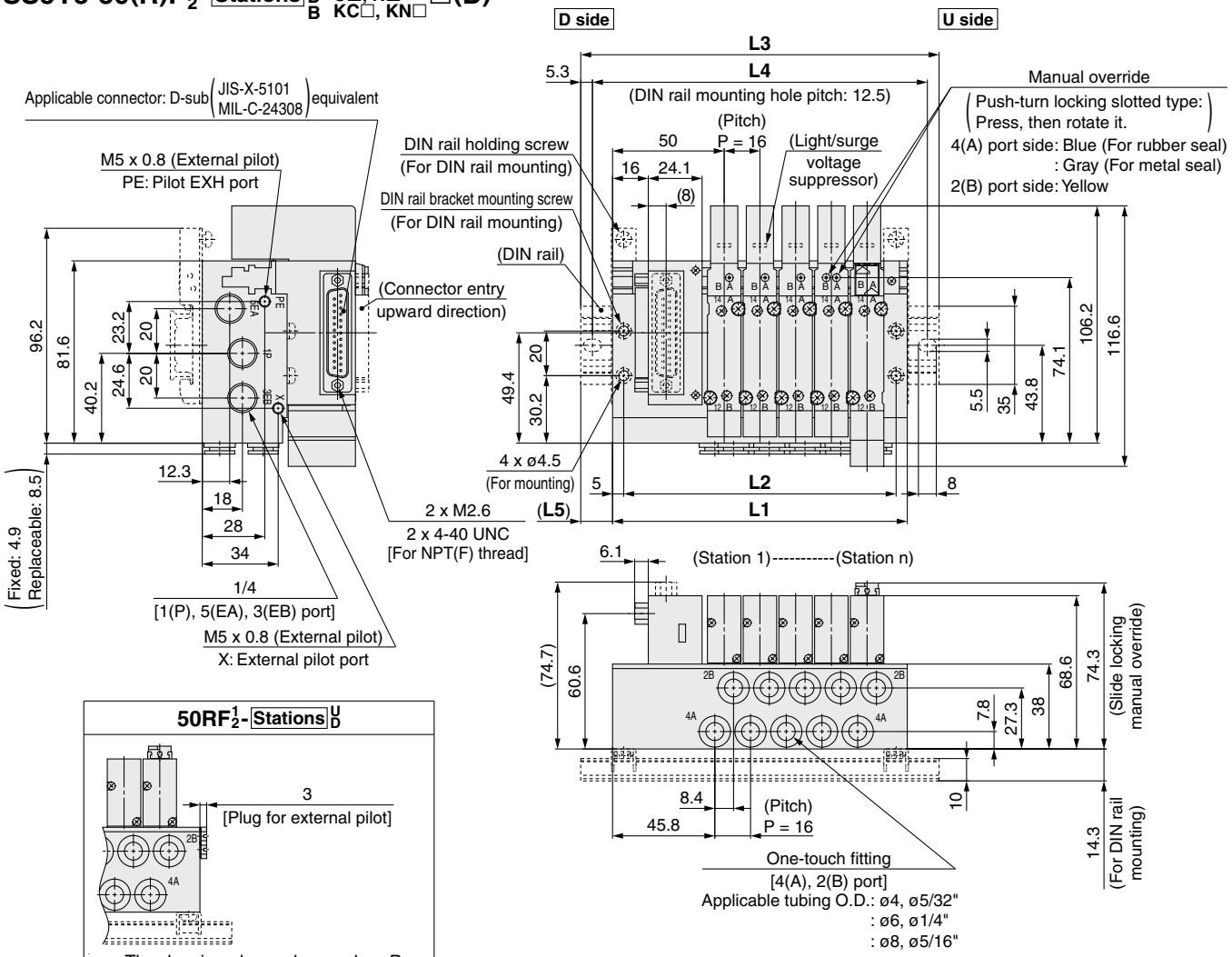

∗ These figures show the "SS5Y5-50F2-05B-C8."

50RF$^{1}_{2}$-Stations$^{U}_{D}$

∗ The drawing above shows when P, E port entry is D.

Port size 01

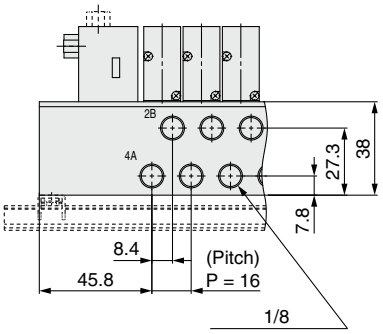

One-touch fitting (Replaceable)

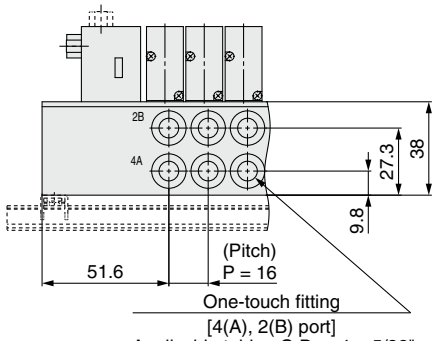

n: Stations	2	3	4	5	6	7	8	9	10	11	12
L1	84	100	116	132	148	164	180	196	212	228	244
L2	74	90	106	122	138	154	170	186	202	218	234
L3	110.5	135.5	148	160.5	173	198	210.5	223	248	260.5	273
L4	100	125	137.5	150	162.5	187.5	200	212.5	237.5	250	262.5
L5	13.5	18	16	14.5	12.5	17	15.5	13.5	18	16.5	14.5

Plug-in Metal Base | Type 50/Side Ported | D-sub Connector

Dimensions: SY5000 Series

SS5Y5-50(R)F$^{1}_{2}$-Stations$^{U}_{B}$-02□(D)

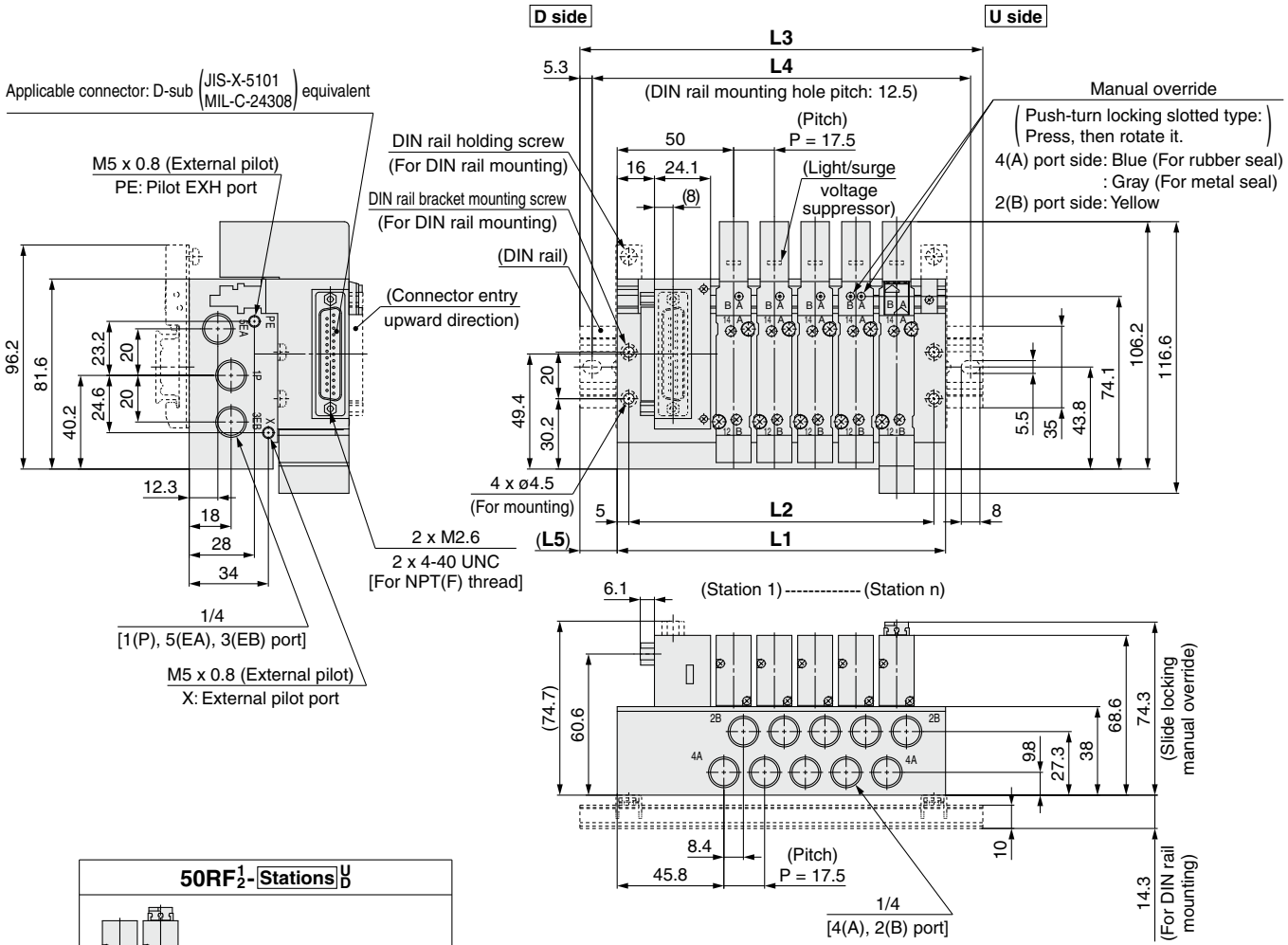

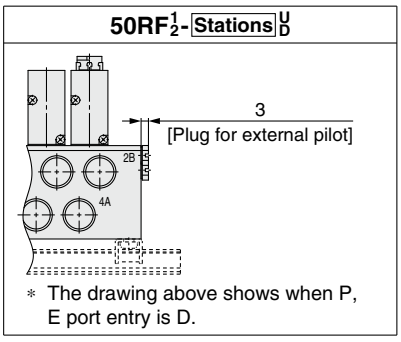

∗ These figures show the “SS5Y5-50F2-05B-02.”

n: Stations	2	3	4	5	6	7	8	9	10	11	12
L1	88.5	106	123.5	141	158.5	176	193.5	211	228.5	246	263.5
L2	78.5	96	113.5	131	148.5	166	183.5	201	218.5	236	253.5
L3	123	135.5	148	173	185.5	210.5	223	235.5	260.5	273	298
L4	112.5	125	137.5	162.5	175	200	212.5	225	250	262.5	287.5
L5	17.5	15	12.5	16	13.5	17.5	15	12.5	16	13.5	17.5

Chart
Valve Specifications
Valve Construction
Valve Replacement Parts
With Residual Pressure Release Valve
Vacuum Release Valve with Restrictor
With Pressure Sensor
Made to Order
Metal Base
D-sub, Flat Ribbon
EX510
Manifold Exploded View
Fitting, Plug Part Nos.
Manifold Options
Specific Product Precautions

Plug-in Metal Base | Type 50/Side Ported | D-sub Connector

Dimensions: SY7000 Series

SS5Y7-50(R)F$^{1}_{2}$-Stations $^{U}_{D}$-$^{02}_{C\square, N\square}$ $^{\square}_{KC\square, KN\square}$ □(D)

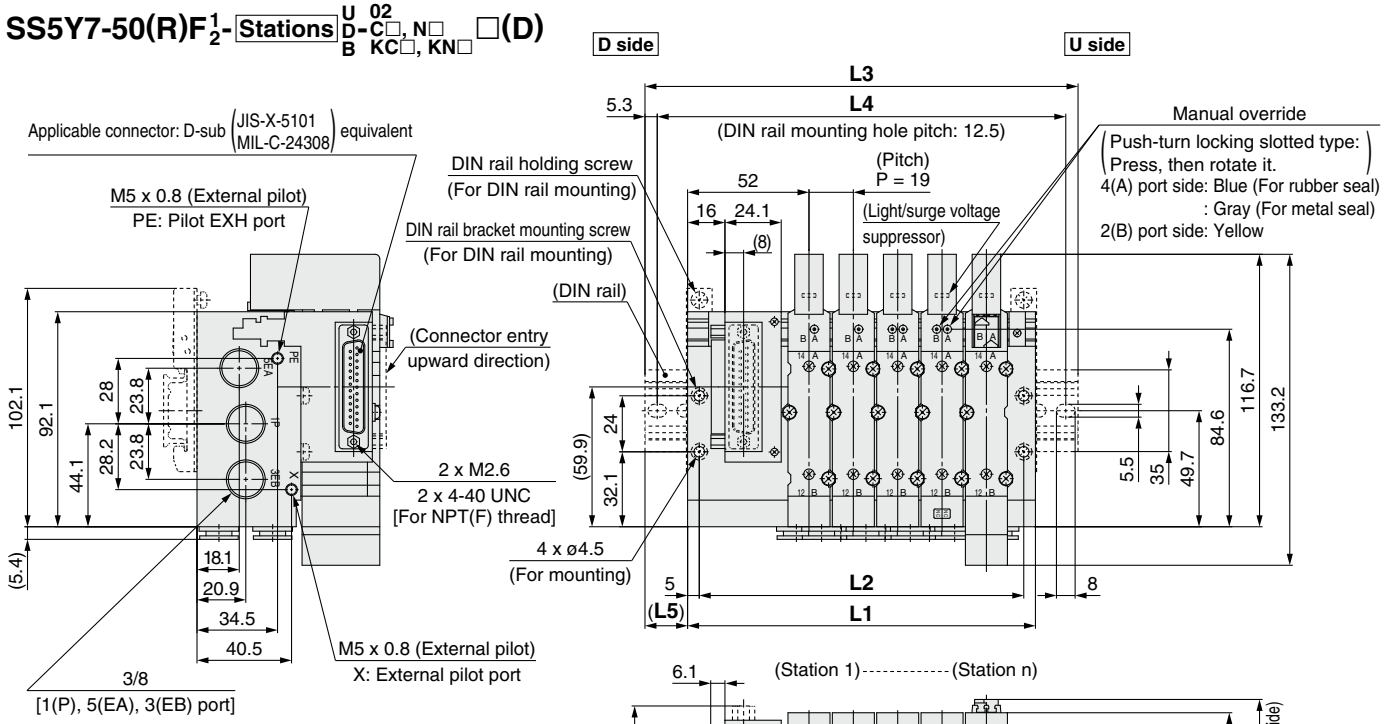

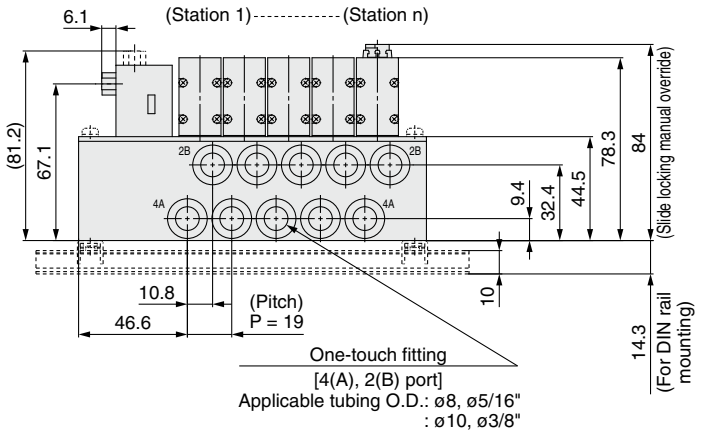

50RF$^{1}_{2}$□-Stations $^{U}_{D}$

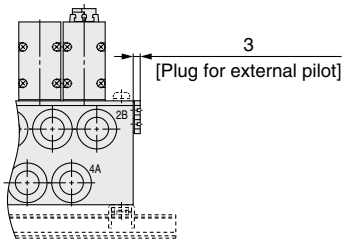

∗ The drawing above shows when P, E port entry is D.

∗ These figures show the "SS5Y7-50F2-05B-C10."

Port size 02

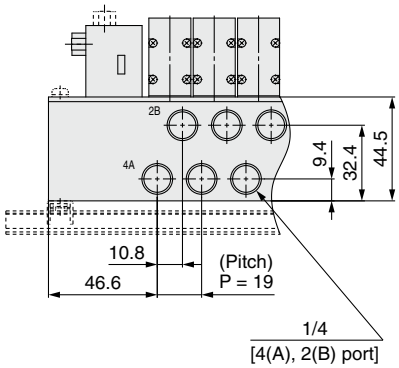

One-touch fitting (Replaceable)

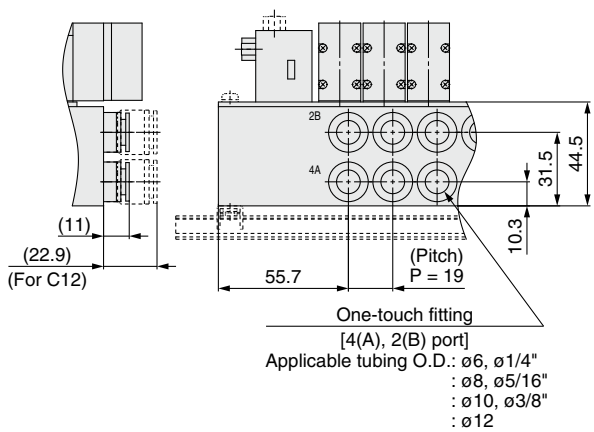

n: Stations	2	3	4	5	6	7	8	9	10	11	12
L1	92	111	130	149	168	187	206	225	244	263	282
L2	82	101	120	139	158	177	196	215	234	253	272
L3	123	148	160.5	185.5	198	223	235.5	260.5	273	298	310.5
L4	112.5	137.5	150	175	187.5	212.5	225	250	262.5	287.5	300
L5	15.5	18.5	15.5	18.5	15	18	15	18	14.5	17.5	14.5

Plug-in Metal Base | Type 50/Side Ported | Flat Ribbon Cable

Dimensions: SY3000 Series

SS5Y3-50(R) P/PG/PH 1/2 - Stations U/D/B M5 C□, N□ KC□, KN□ □(D)

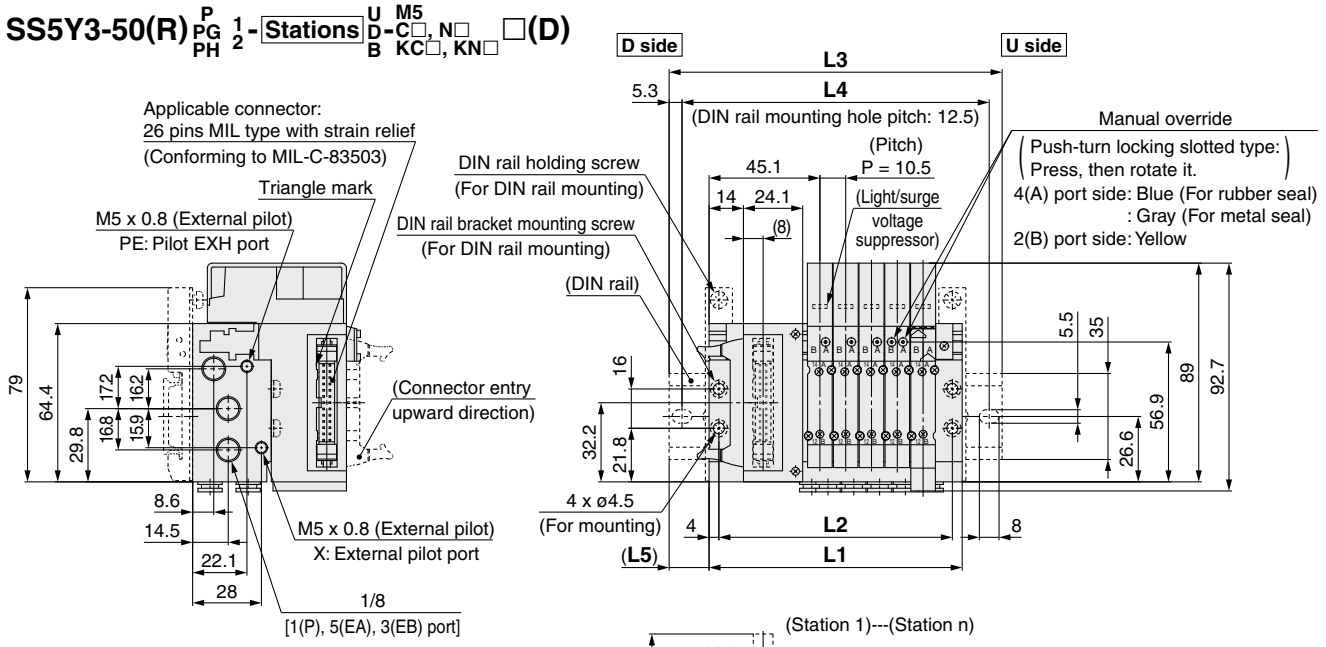

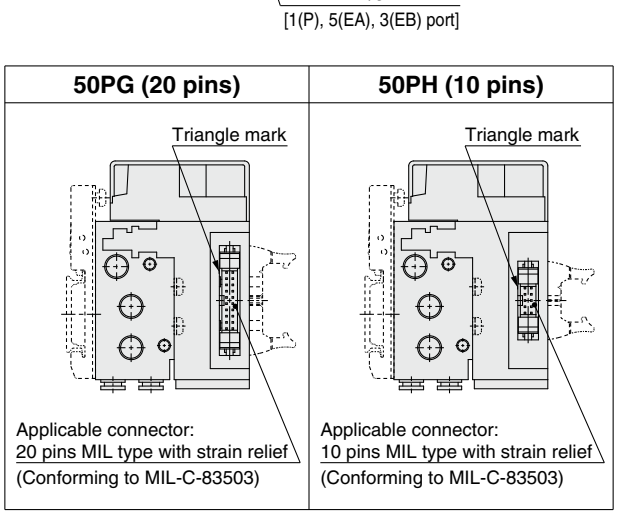

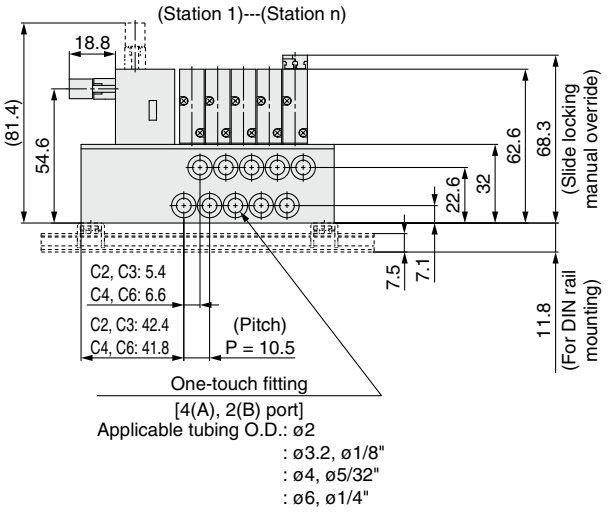

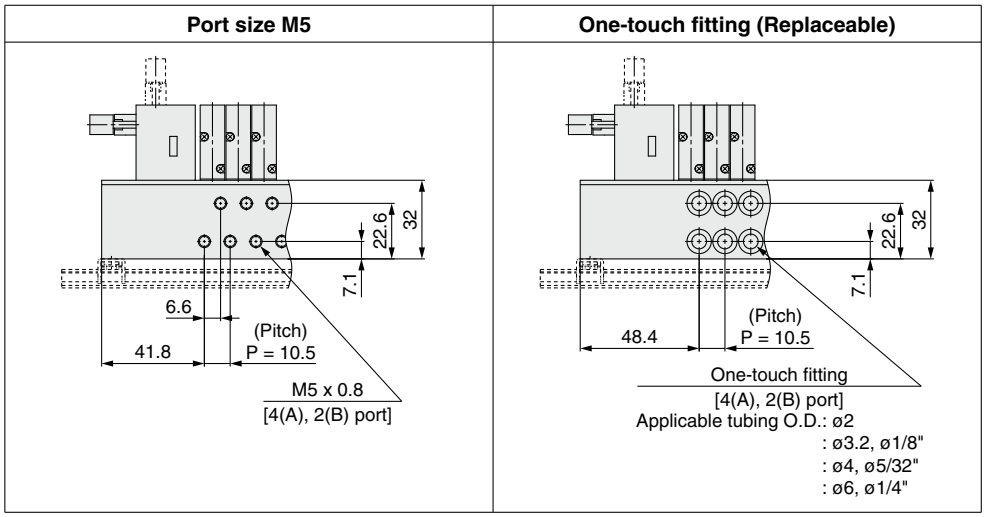

* These figures show the "SS5Y3-50P2-05B-C6."
* Only connectors are different for 50PG and 50PH. L1 to L5 dimensions are the same as 50P type.

50RP□ 1/2 - Stations U/D

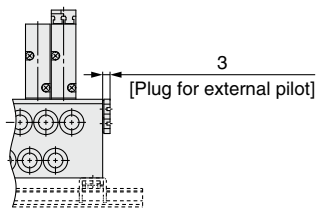

* The drawing above shows when P, E port entry is D.

n: Stations	2	3	4	5	6	7	8	9	10	11	12
L1	71.5	82	92.5	103	113.5	124	134.5	145	155.5	166	176.5
L2	63.5	74	84.5	95	105.5	116	126.5	137	147.5	158	168.5
L3	98	110.5	123	135.5	148	160.5	160.5	173	185.5	198	210.5
L4	87.5	100	112.5	125	137.5	150	150	162.5	175	187.5	200
L5	13.5	14.5	15.5	16.5	17.5	18.5	13	14	15	16	17

Plug-in Metal Base | Type 50/Side Ported | Flat Ribbon Cable

Dimensions: SY3000 Series

SS5Y3-50(R)P/PG/PH 1/2-Stations U/D/B-01□(D)

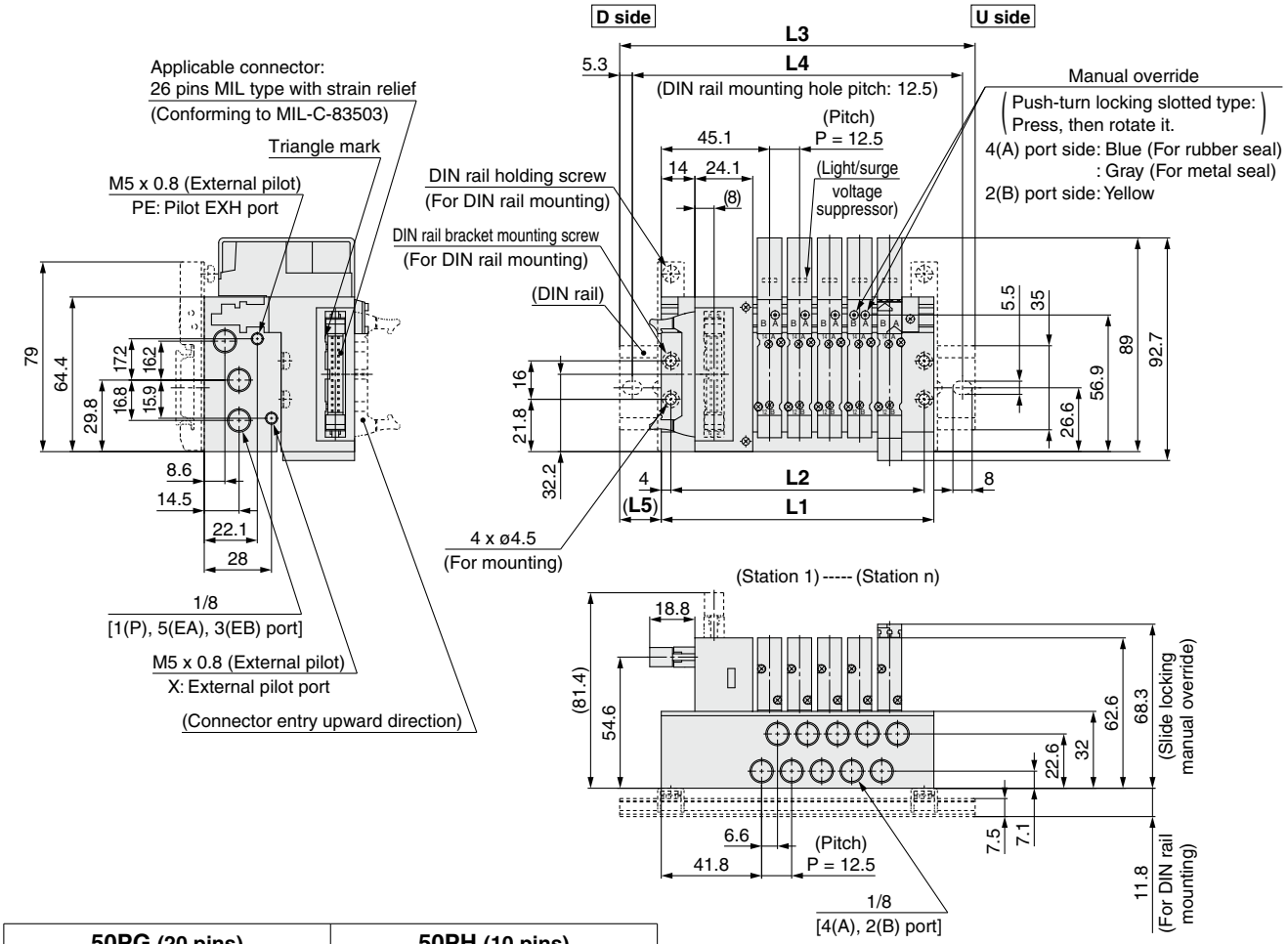

50PG (20 pins)	50PH (10 pins)
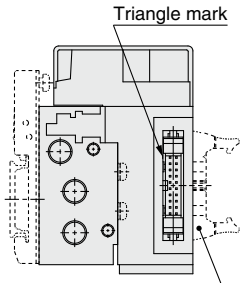	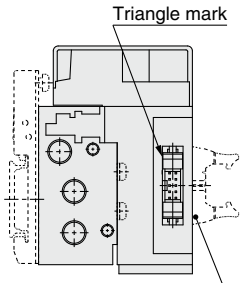
Applicable connector: 20 pins MIL type with strain relief (Conforming to MIL-C-83503)	Applicable connector: 10 pins MIL type with strain relief (Conforming to MIL-C-83503)

* These figures show the "SS5Y3-50P2-05B-01."
* Only connectors are different for 50PG and 50PH. L1 to L5 dimensions are the same as 50P type.

50RP□ 1/2-Stations U/D

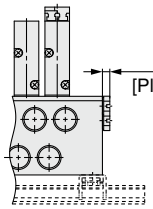

* The drawing above shows when P, E port entry is D.

n: Stations	2	3	4	5	6	7	8	9	10	11	12
L1	76	88.5	101	113.5	126	138.5	151	163.5	176	188.5	201
L2	68	80.5	93	105.5	118	130.5	143	155.5	168	180.5	193
L3	110.5	123	135.5	148	160.5	173	185.5	198	210.5	223	235.5
L4	100	112.5	125	137.5	150	162.5	175	187.5	200	212.5	225
L5	17.5	17.5	17.5	17.5	17.5	17.5	17.5	17.5	17.5	17.5	17.5

Plug-in Metal Base | Type 50/Side Ported | Flat Ribbon Cable

Dimensions: SY5000 Series

SS5Y5-50(R) P/PG/PH 1/2 - Stations U/D/B 01 C□, N□ / KC□, KN□ □(D)

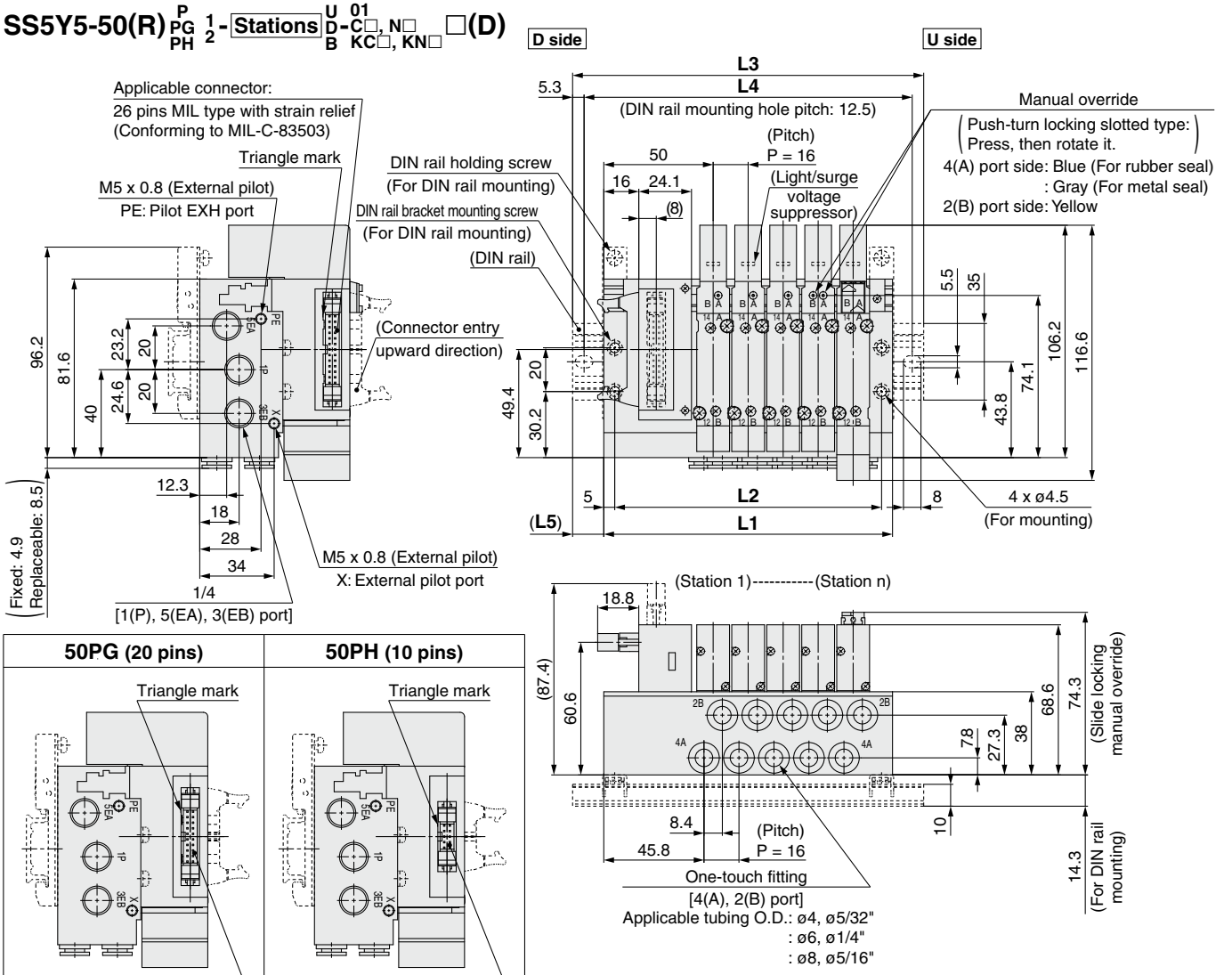

50PG (20 pins)	50PH (10 pins)
Applicable connector: 20 pins MIL type with strain relief (Conforming to MIL-C-83503)	Applicable connector: 10 pins MIL type with strain relief (Conforming to MIL-C-83503)

* These figures show the "SS5Y5-50P2-05B-C8."
* Only connectors are different for 50PG and 50PH.
L1 to L5 dimensions are the same as 50P type.

Port size 01

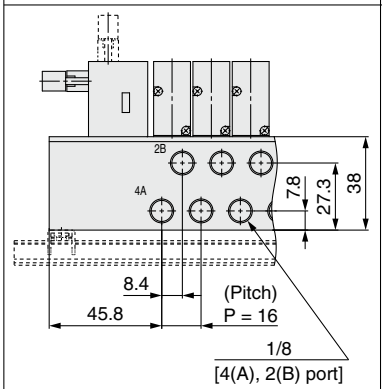

One-touch fitting (Replaceable)

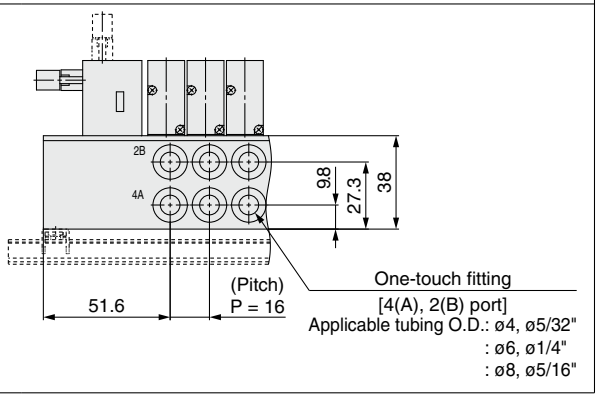

50RP□ 1/2 - Stations U/D

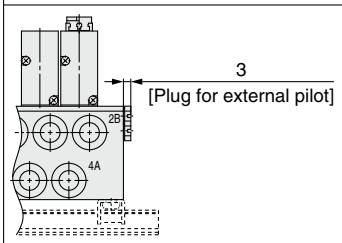

* The drawing above shows when P, E port entry is D.

n: Stations	2	3	4	5	6	7	8	9	10	11	12
L1	84	100	116	132	148	164	180	196	212	228	244
L2	74	90	106	122	138	154	170	186	202	218	234
L3	110.5	135.5	148	160.5	173	198	210.5	223	248	260.5	273
L4	100	125	137.5	150	162.5	187.5	200	212.5	237.5	250	262.5
L5	13.5	18	16	14.5	12.5	17	15.5	13.5	18	16.5	14.5

Plug-in Metal Base | Type 50/Side Ported | Flat Ribbon Cable

Dimensions: SY5000 Series

SS5Y5-50(R)P/PG/PH 1/2-Stations U/D/B-02□(D)

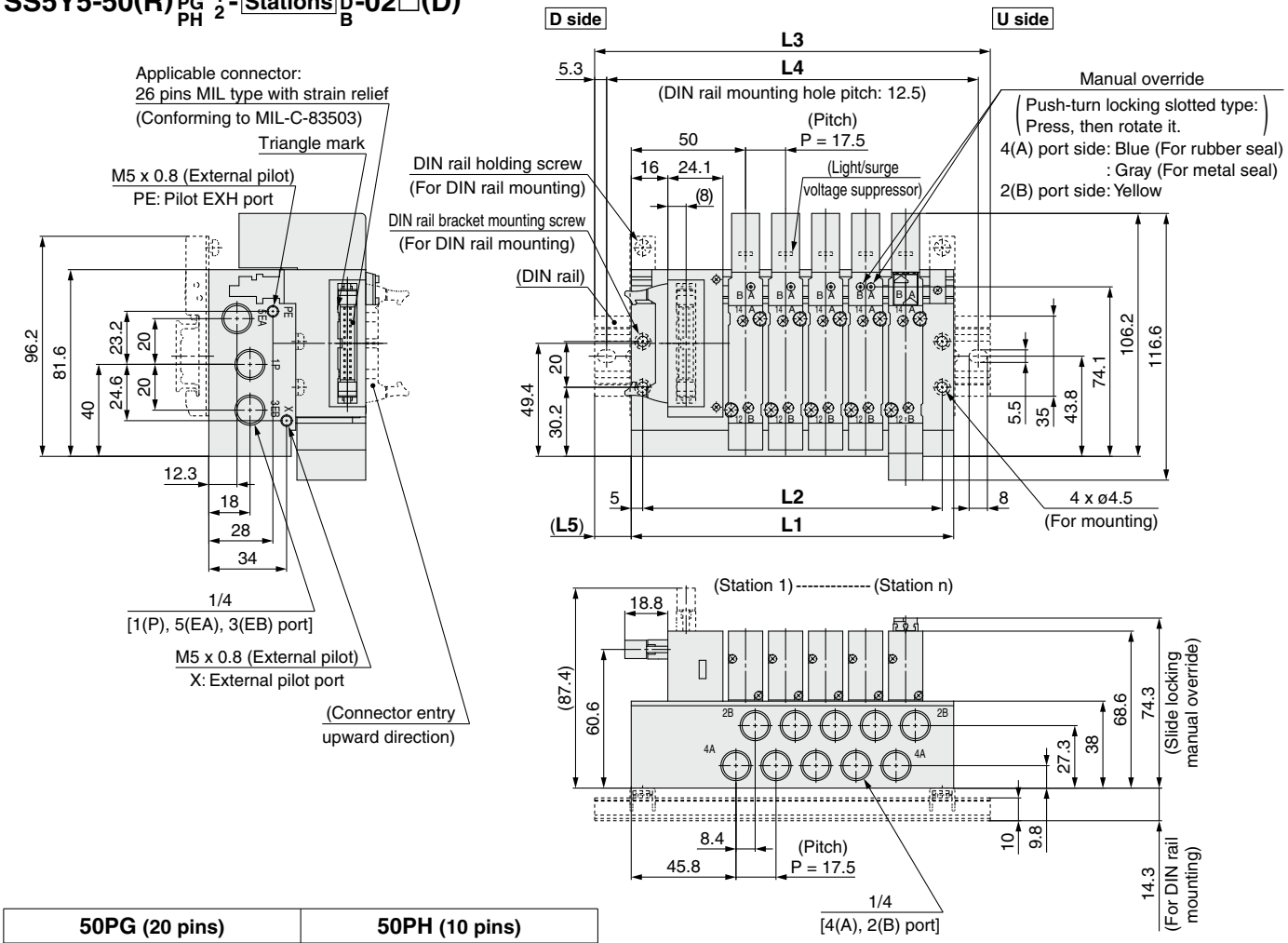

50PG (20 pins)	50PH (10 pins)
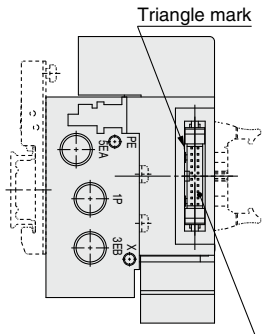	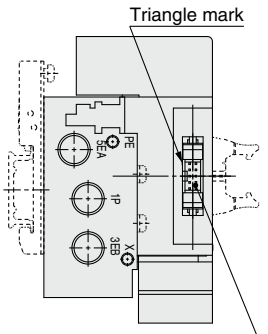
Applicable connector: 20 pins MIL type with strain relief (Conforming to MIL-C-83503)	Applicable connector: 10 pins MIL type with strain relief (Conforming to MIL-C-83503)

* These figures show the "SS5Y5-50P2-05B-02."
* Only connectors are different for 50PG and 50PH. L1 to L5 dimensions are the same as 50P type.

50RP□ 1/2-Stations U/D

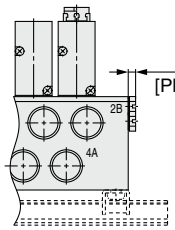

* The drawing above shows when P, E port entry is D.

n: Stations	2	3	4	5	6	7	8	9	10	11	12
L1	88.5	106	123.5	141	158.5	176	193.5	211	228.5	246	263.5
L2	78.5	96	113.5	131	148.5	166	183.5	201	218.5	236	253.5
L3	123	135.5	148	173	185.5	210.5	223	235.5	260.5	273	298
L4	112.5	125	137.5	162.5	175	200	212.5	225	250	262.5	287.5
L5	17.5	15	12.5	16	13.5	17.5	15	12.5	16	13.5	17.5

Plug-in Metal Base | Type 50/Side Ported | Flat Ribbon Cable

Dimensions: SY7000 Series

SS5Y7-50(R) P/PG/PH 1/2 - Stations U/D/B 02 C□, N□/KC□, KN□ □(D)

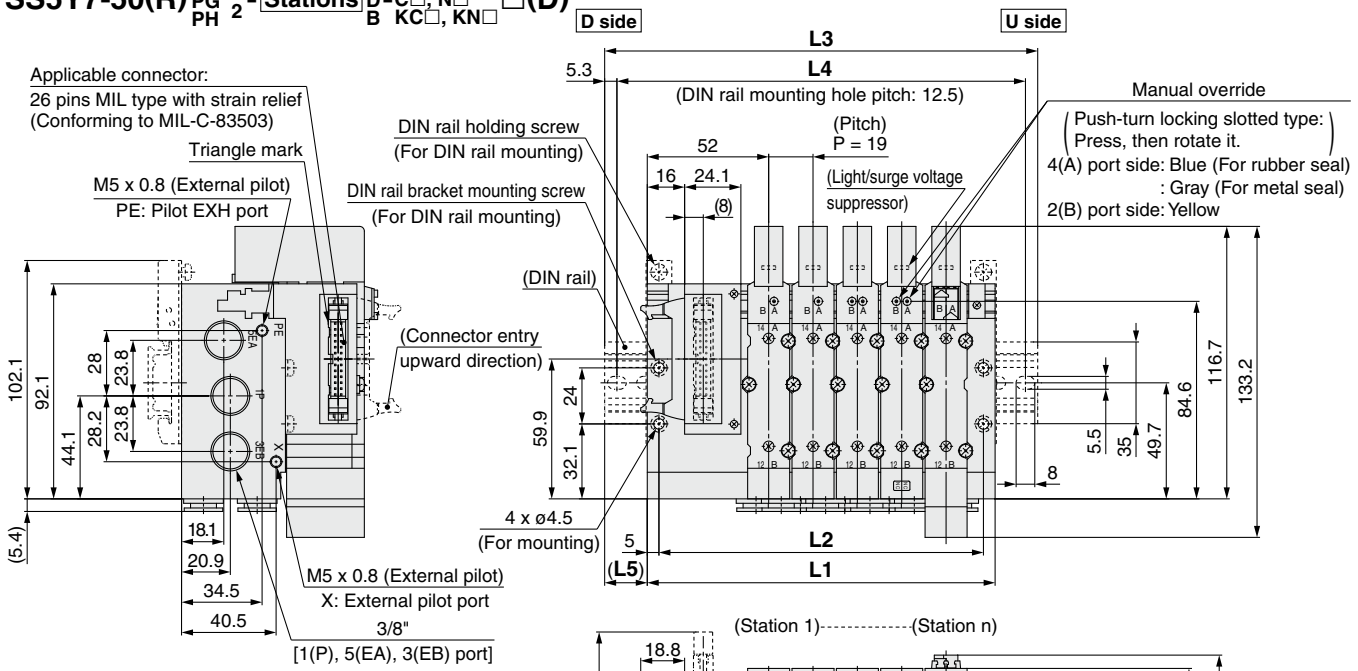

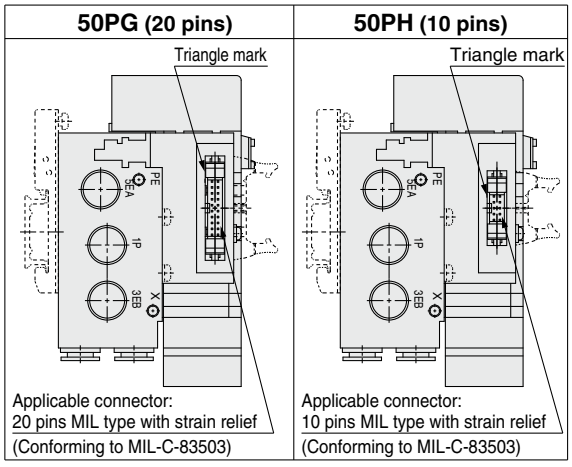

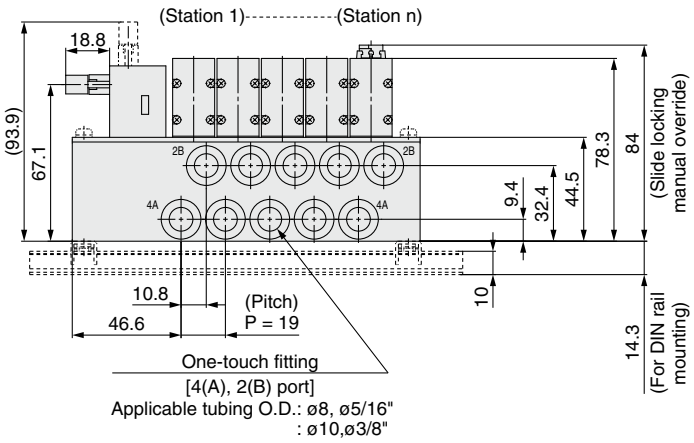

∗ These figures show the "SS5Y7-50P2-05B-C10."

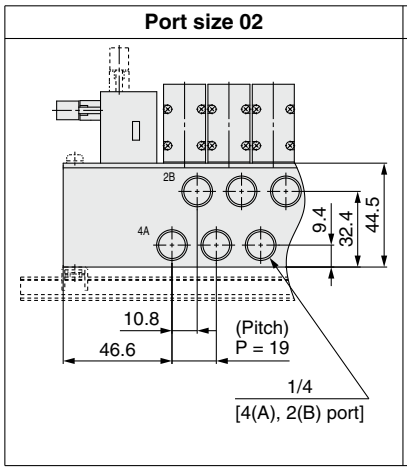

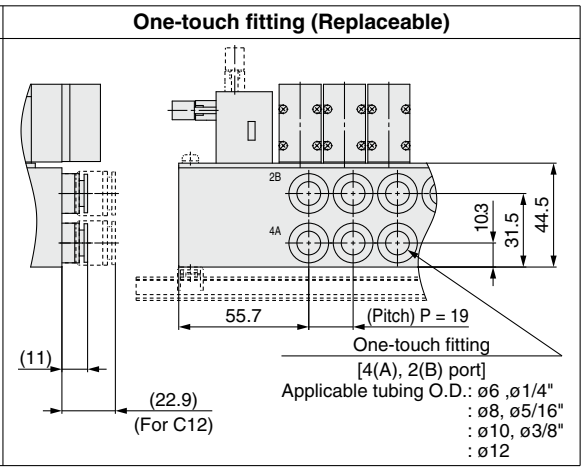

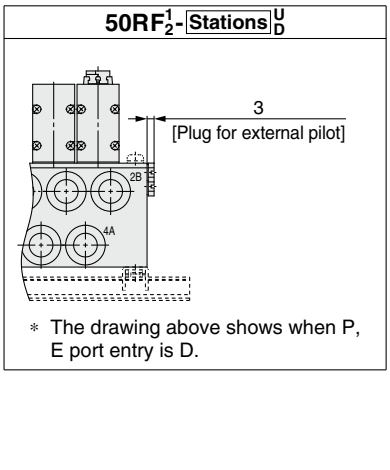

∗ The drawing above shows when P, E port entry is D.

n: Stations	2	3	4	5	6	7	8	9	10	11	12
L1	92	111	130	149	168	187	206	225	244	263	282
L2	82	101	120	139	158	177	196	215	234	253	272
L3	123	148	160.5	185.5	198	223	235.5	260.5	273	298	310.5
L4	112.5	137.5	150	175	187.5	212.5	225	250	262.5	287.5	300
L5	15.5	18.5	15.5	18.5	15	18	15	18	14.5	17.5	14.5

Plug-in Metal Base | Type 51/Bottom Ported | D-sub Connector

Dimensions: SY3000 Series

SS5Y3-51F$^{1}_{2}$- Stations D- M5, 01 / C□, N□ / KC□, KN□ □

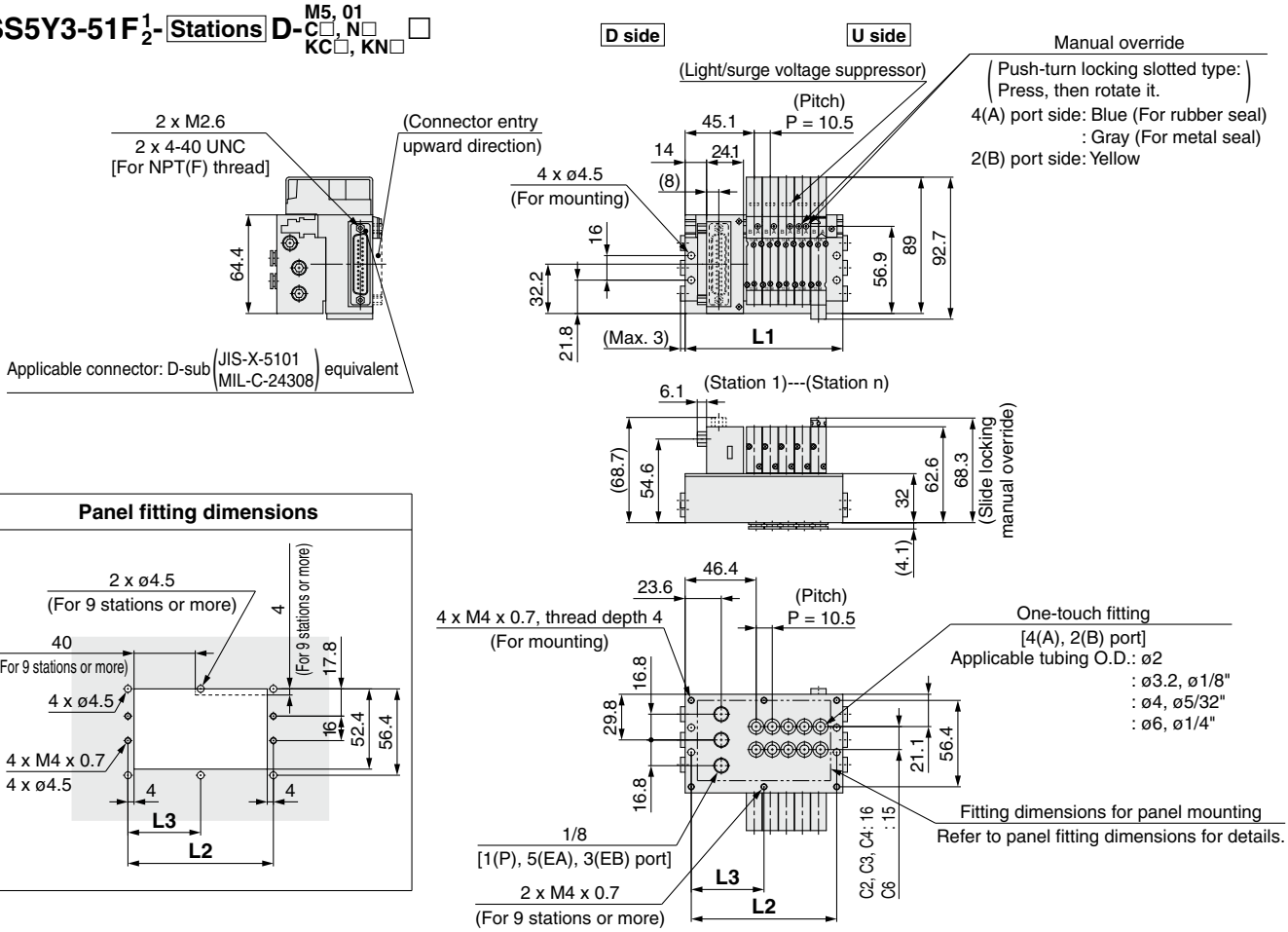

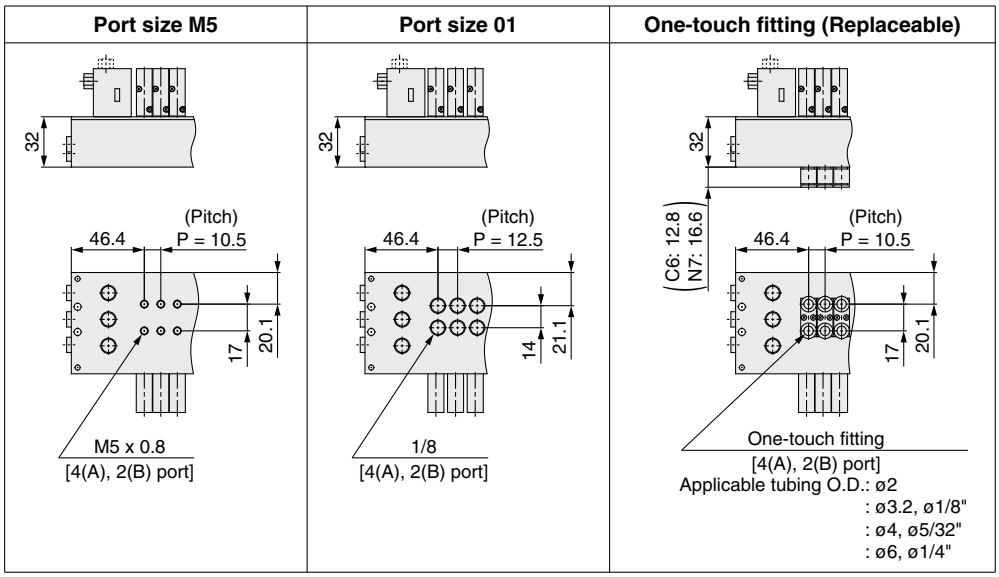

* These figures show the "SS5Y3-51F2-05D-C6."

Port Sizes M5, C□, N□, KC□, KN□

n: Stations	2	3	4	5	6	7	8	9	10	11	12
L1	71.5	82	92.5	103	113.5	124	134.5	145	155.5	166	176.5
L2	63.5	74	84.5	95	105.5	116	126.5	137	147.5	158	168.5
L3	—	—	—	—	—	—	—	68.5	73.8	79	84.3

Port Size 01

n: Stations	2	3	4	5	6	7	8	9	10	11	12
L1	76	88.5	101	113.5	126	138.5	151	163.5	176	188.5	201
L2	68	80.5	93	105.5	118	130.5	143	155.5	168	180.5	193
L3	—	—	—	—	—	—	—	77.8	84	90.3	96.5

Dimensions: SY5000 Series

Plug-in Metal Base | Type 51/Bottom Ported | D-sub Connector

SS5Y5-51F$^{1}_{2}$- Stations D-$^{01, 02}_{C\square, N\square}$ $^{\square}_{KC\square, KN\square}$

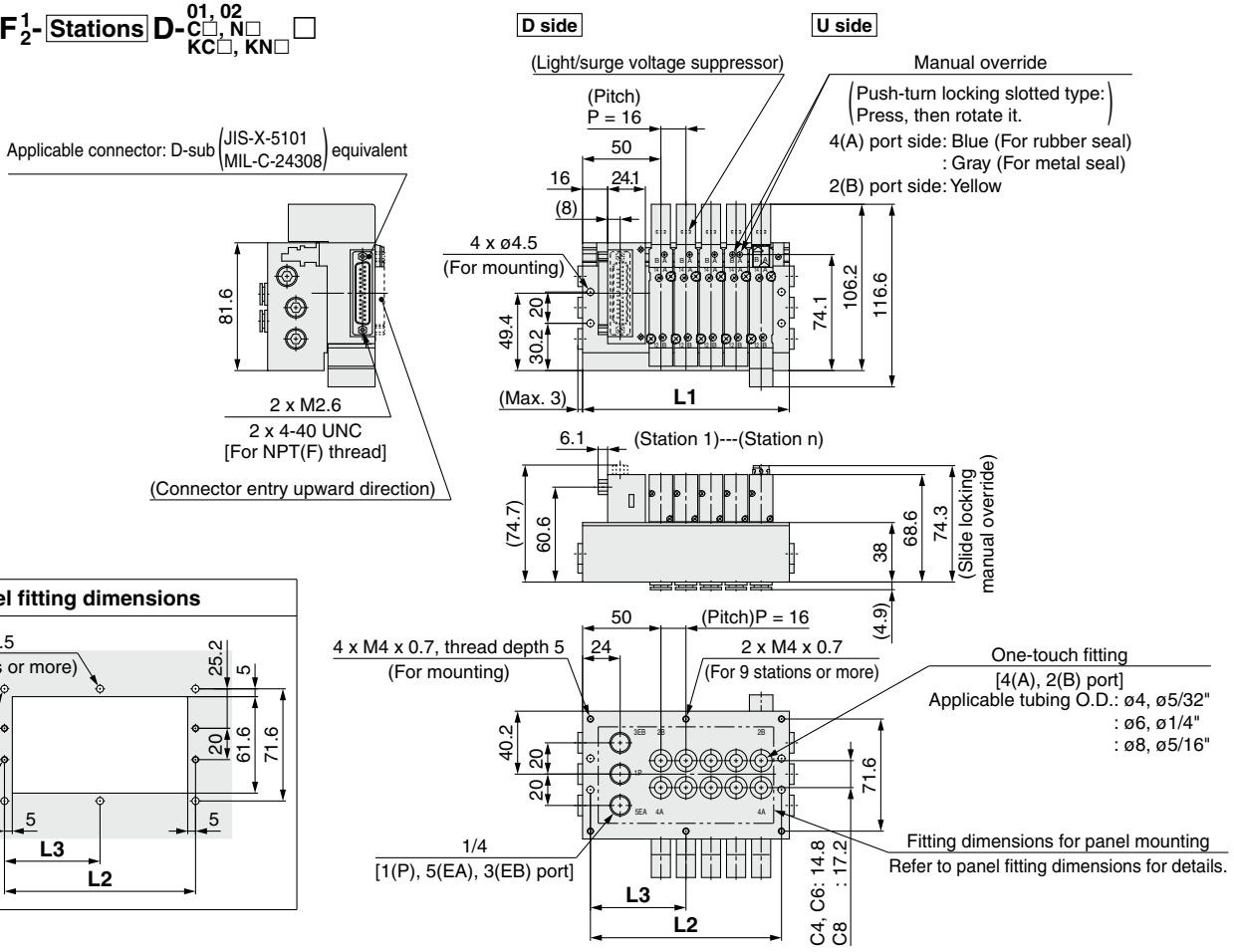

Panel fitting dimensions

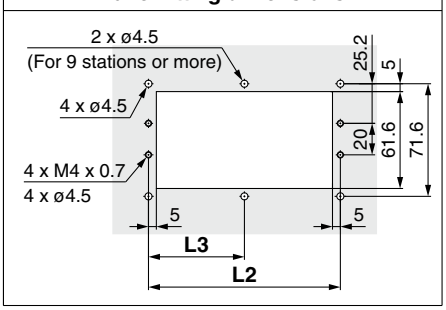

Port size 01	Port size 02	One-touch fitting (Replaceable)
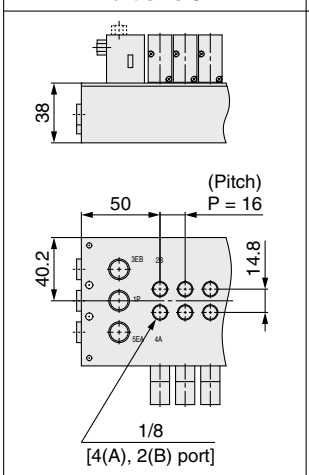	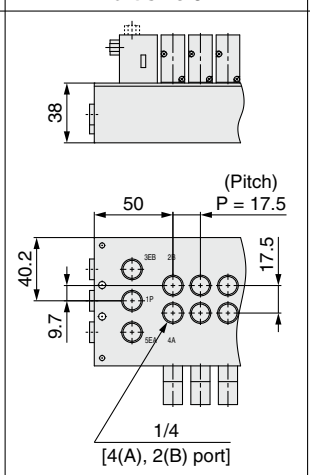	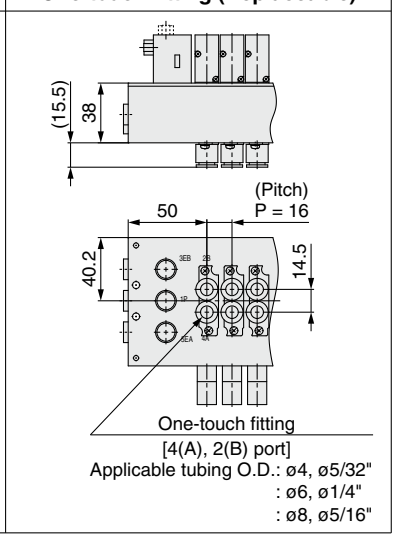

* These figures show the "SS5Y5-51F2-05D-C8."

Port Sizes 01, C□, N□, KC□, KN□

n: Stations	2	3	4	5	6	7	8	9	10	11	12
L1	84	100	116	132	148	164	180	196	212	228	244
L2	74	90	106	122	138	154	170	186	202	218	234
L3	—	—	—	—	—	—	—	93	101	109	117

Port Size 02

n: Stations	2	3	4	5	6	7	8	9	10	11	12
L1	88.5	106	123.5	141	158.5	176	193.5	211	228.5	246	263.5
L2	78.5	96	113.5	131	148.5	166	183.5	201	218.5	236	253.5
L3	—	—	—	—	—	—	—	100.5	109.3	118	126.8

Dimensions: SY7000 Series

SS5Y7-51F$^{1}_{2}$-Stations D-^{02}C□, N□ / KC□, KN□ □(D)

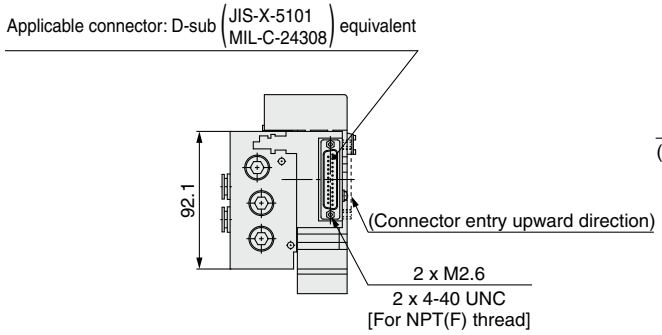

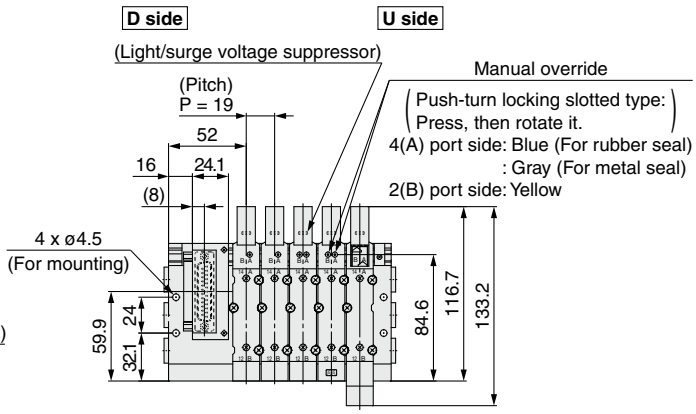

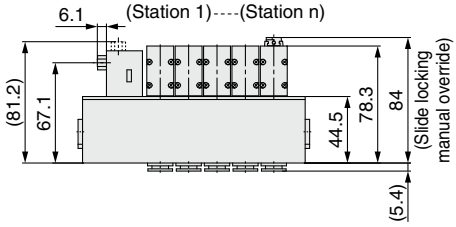

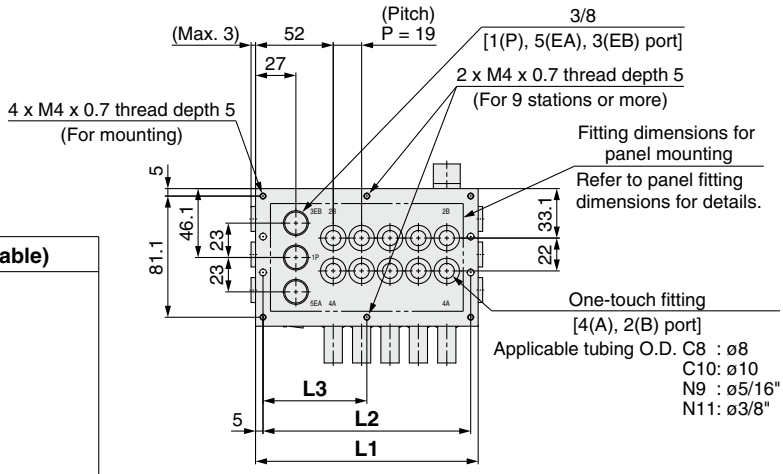

* These figures show the "SS5Y7-51F2-05D-C10."

Port size 02	One-touch fitting (Replaceable)
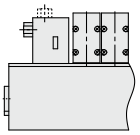	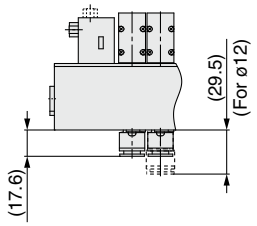
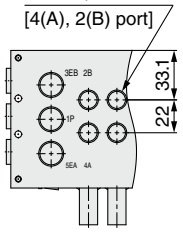	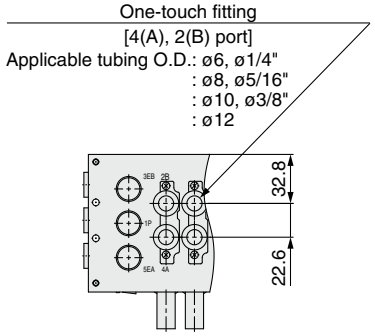

Panel fitting dimensions

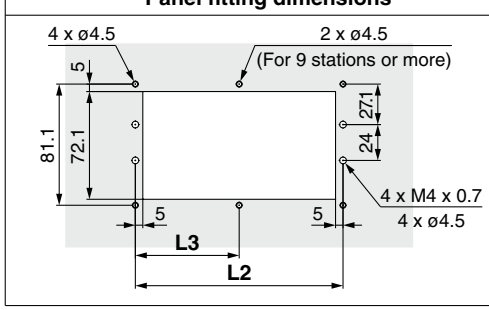

n: Stations	2	3	4	5	6	7	8	9	10	11	12
L1	92	111	130	149	168	187	206	225	244	263	282
L2	82	101	120	139	158	177	196	215	234	253	272
L3	—	—	—	—	—	—	—	107.5	117	126.5	136

Plug-in Metal Base | Type 51/Bottom Ported | Flat Ribbon Cable

Dimensions: SY3000 Series

SS5Y3-51 P / PG / PH **1** / **2** - **Stations** **D-** M5, 01 / C□, N□ / KC□, KN□ □

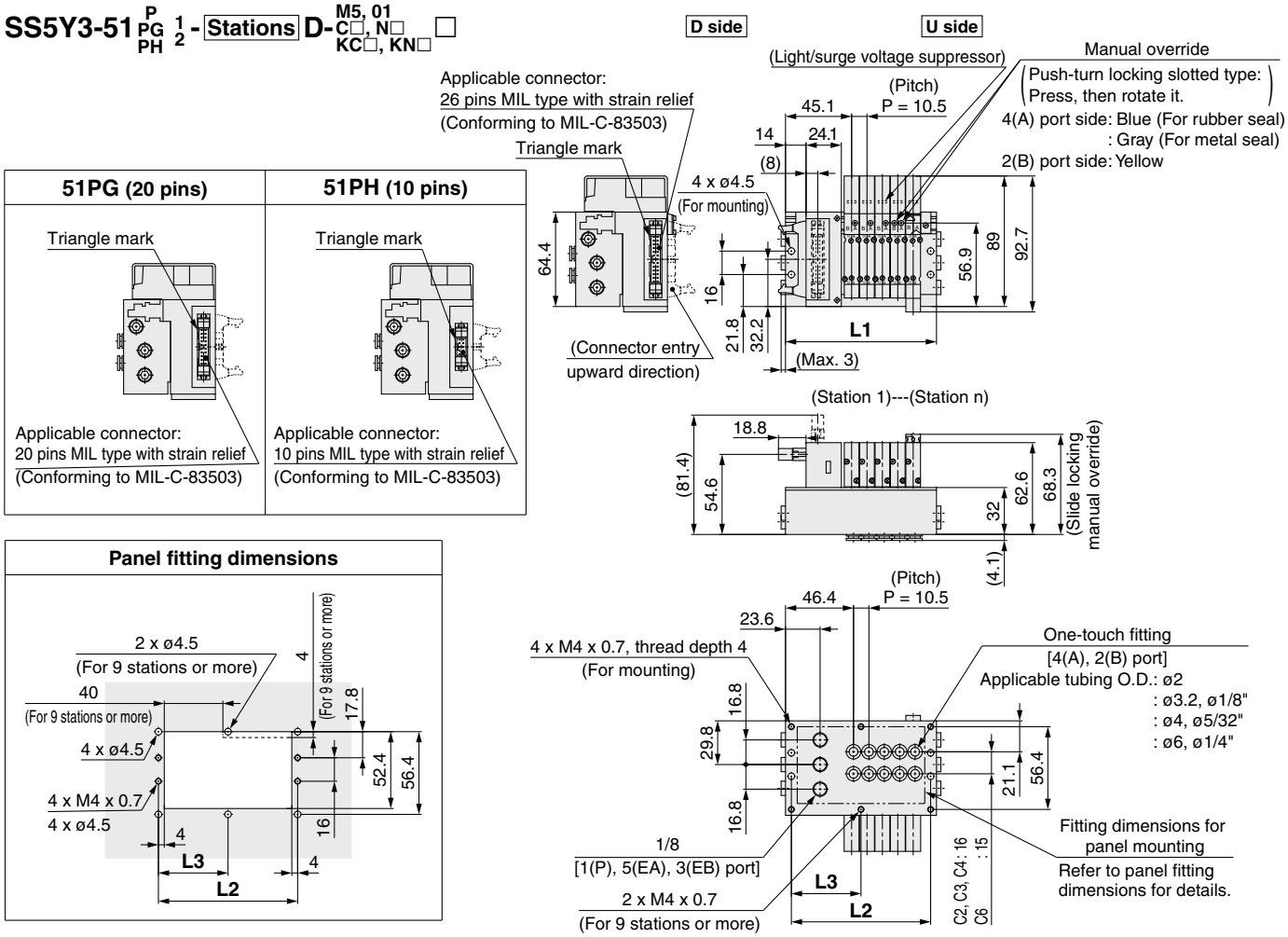

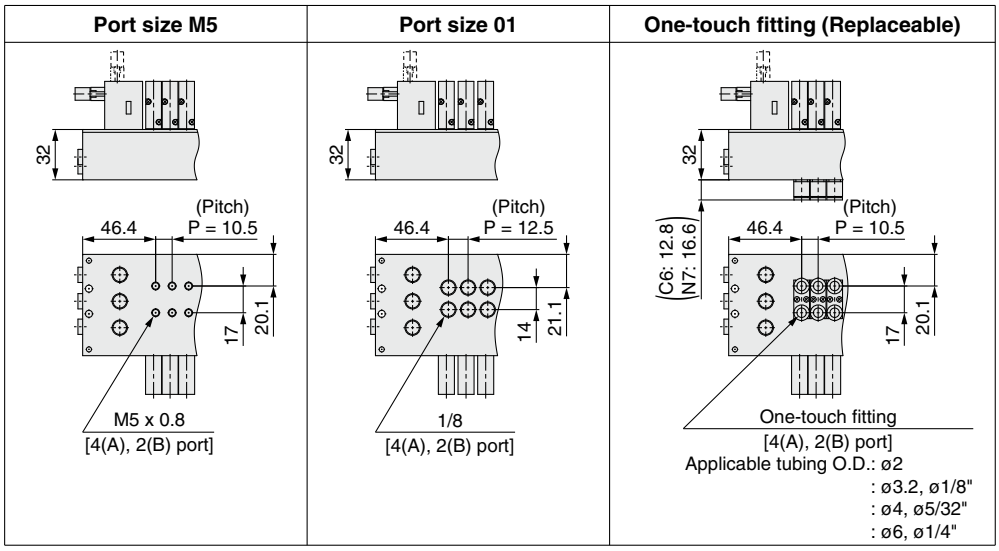

* These figures show the "SS5Y3-51P2-05D-C6."

Port Sizes M5, C□, N□, KC□, KN□

n: Stations	2	3	4	5	6	7	8	9	10	11	12
L1	71.5	82	92.5	103	113.5	124	134.5	145	155.5	166	176.5
L2	63.5	74	84.5	95	105.5	116	126.5	137	147.5	158	168.5
L3	—	—	—	—	—	—	—	68.5	73.8	79	84.3

Port Size 01

n: Stations	2	3	4	5	6	7	8	9	10	11	12
L1	76	88.5	101	113.5	126	138.5	151	163.5	176	188.5	201
L2	68	80.5	93	105.5	118	130.5	143	155.5	168	180.5	193
L3	—	—	—	—	—	—	—	77.8	84	90.3	96.5

Chart
Valve Specifications
Valve Construction
Valve Replacement Parts
With Residual Pressure Release Valve
Vacuum Release Valve with Restrictor
With Pressure Sensor
Made to Order
Metal Base
D-sub, Flat Ribbon
EX510
Manifold Exploded View
Fitting, Plug Part Nos.
Manifold Options
Specific Product Precautions

Plug-in Metal Base | Type 51/Bottom Ported | Flat Ribbon Cable

Dimensions: SY5000 Series

SS5Y5-51 P/PG/PH 1/2 - Stations D- 01, 02 / C□, N□ / KC□, KN□ □

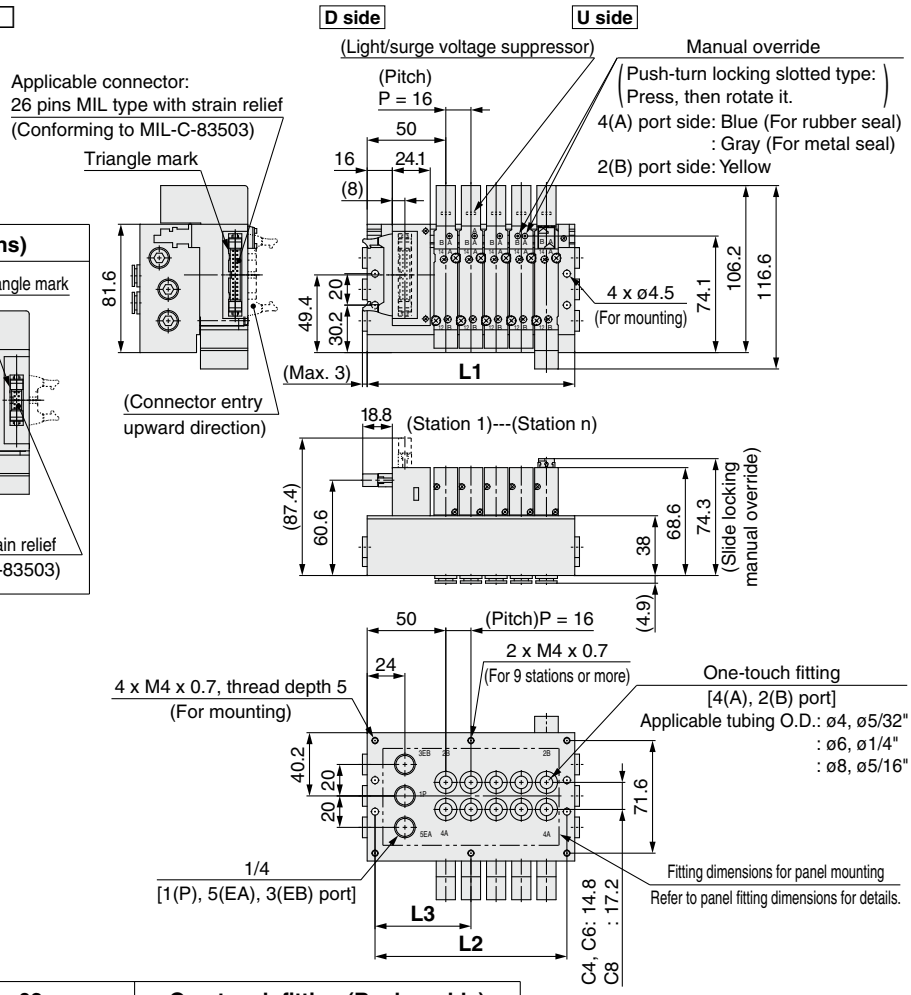

51PG (20 pins)	51PH (10 pins)
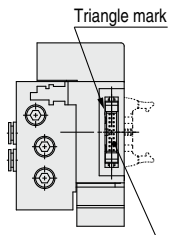	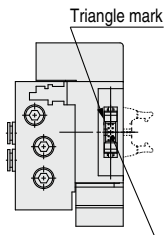
Applicable connector: 20 pins MIL type with strain relief (Conforming to MIL-C-83503)	Applicable connector: 10 pins MIL type with strain relief (Conforming to MIL-C-83503)

Panel fitting dimensions

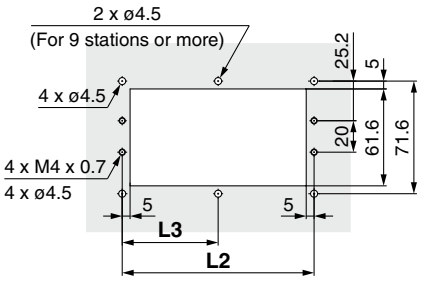

Port size 01	Port size 02	One-touch fitting (Replaceable)
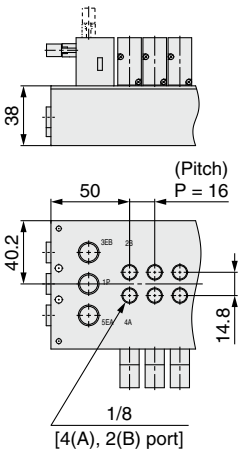	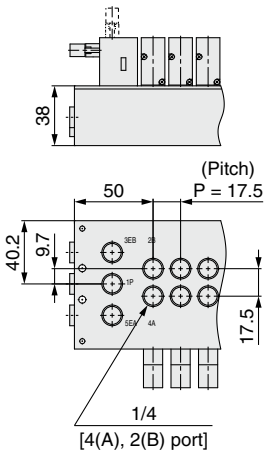	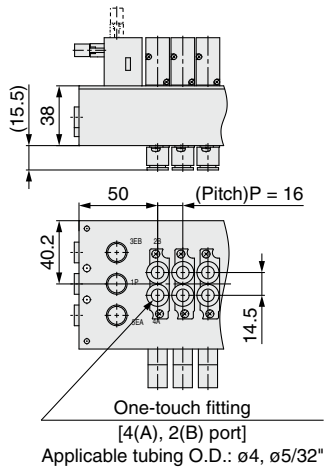

* These figures show the "SS5Y5-51P2-05D-C8."

Port Sizes 01, C□, N□, KC□, KN□

n: Stations	2	3	4	5	6	7	8	9	10	11	12
L1	84	100	116	132	148	164	180	196	212	228	244
L2	74	90	106	122	138	154	170	186	202	218	234
L3	—	—	—	—	—	—	—	93	101	109	117

Port Size 02

n: Stations	2	3	4	5	6	7	8	9	10	11	12
L1	88.5	106	123.5	141	158.5	176	193.5	211	228.5	246	263.5
L2	78.5	96	113.5	131	148.5	166	183.5	201	218.5	236	253.5
L3	—	—	—	—	—	—	—	100.5	109.3	118	126.8

Plug-in Metal Base | Type 51/Bottom Ported | Flat Ribbon Cable

Dimensions: SY7000 Series

SS5Y7-51 P / PG / PH 1 / 2 - Stations D- 02 C□, N□ / KC□, KN□ □(D)

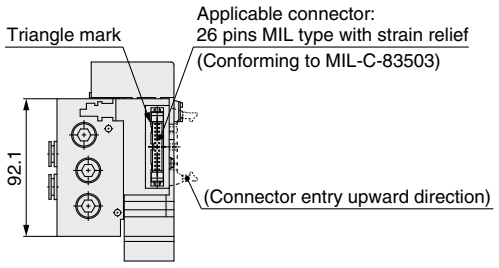

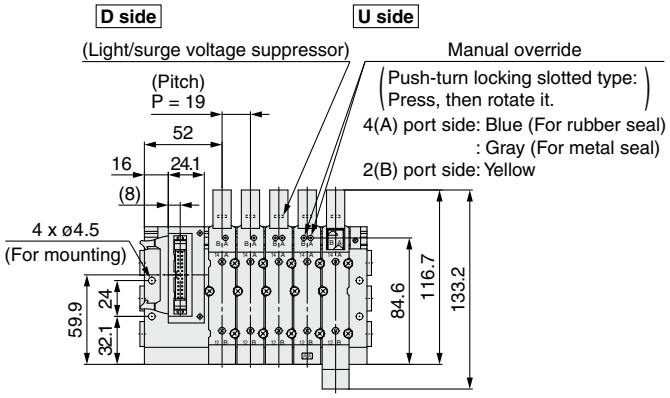

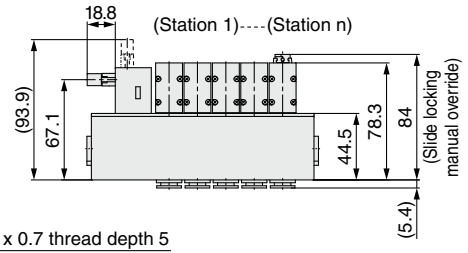

51PG (20 pins)	51PH (10 pins)
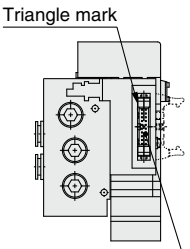	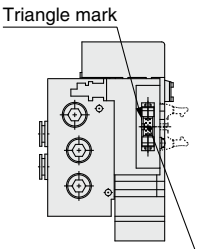
Triangle mark Applicable connector: 20 pins MIL type with strain relief (Conforming to MIL-C-83503)	Triangle mark Applicable connector: 10 pins MIL type with strain relief (Conforming to MIL-C-83503)

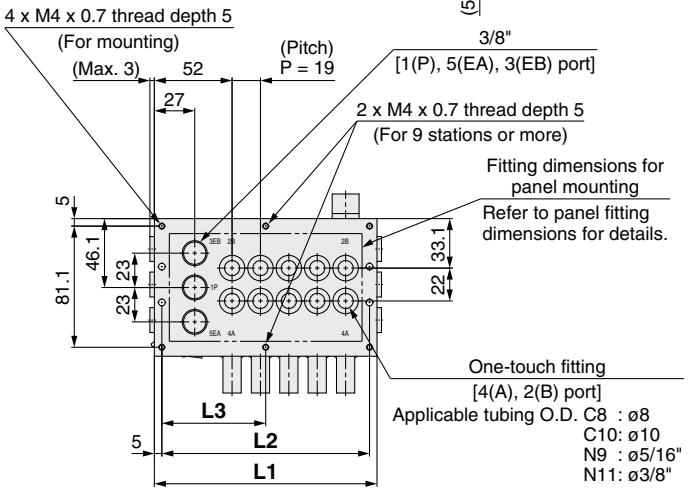

∗ These figures show the "SS5Y7-51P2-05D-C10."

Port size 02	One-touch fitting (Replaceable)
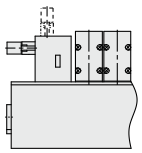	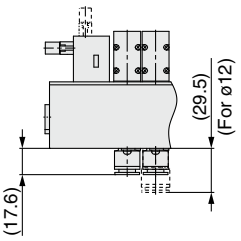
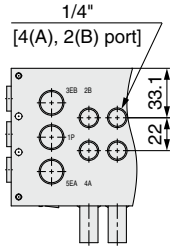	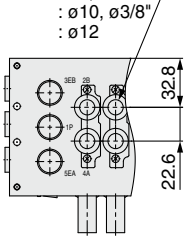

Panel fitting dimensions

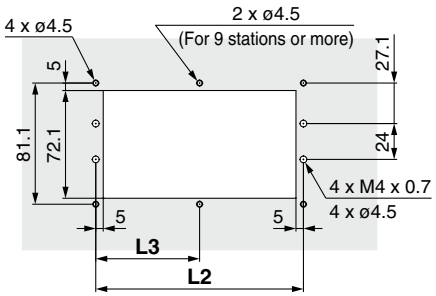

n: Stations	2	3	4	5	6	7	8	9	10	11	12
L1	92	111	130	149	168	187	206	225	244	263	282
L2	82	101	120	139	158	177	196	215	234	253	272
L3	—	—	—	—	—	—	—	107.5	117	126.5	136

Plug-in Metal Base

D-sub Connector | Flat Ribbon Cable

Type 52
Top Ported

SY3000/5000/7000 Series

How to Order Manifolds

SS5Y 3 – 52 F 1 – □ 05 D – □ □

❶ ❷ ❸ ❹ ❺ ❻ ❼ ❽ ❾

❶ Series

3	SY3000
5	SY5000
7	SY7000

❷ Type

52	Top ported
52R	Top ported, External pilot

❸ Connector type

F: D-sub connector (25 pins)

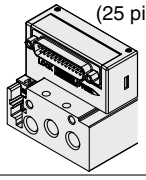

P: Flat ribbon cable (26 pins)

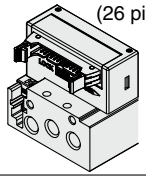

PG: Flat ribbon cable (20 pins)

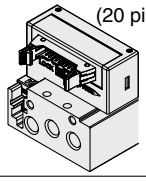

PH: Flat ribbon cable (10 pins)

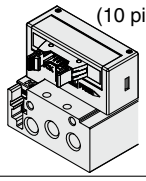

❹ Connector entry direction

1: Upward	**2**: Lateral
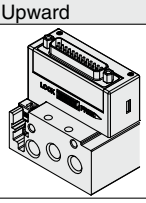	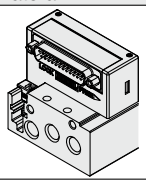

❺ Wiring type

Nil	All double wiring*1
S	All single wiring*2

*1 All double wiring: 2-position single, double, 3-position, and 4-position valves can be used on all manifold stations.
*2 All single wiring: Available only for the manifold which has 2-position single for all stations
Note that 2-position double, 3-, or 4-position valves cannot be used.
* If a mix of single and double wiring is required, it is supplied as a special order.

❻ Valve stations

F: D-sub connector (25 pins)

Symbol	Stations	Note
02	2 stations	All double wiring
⋮	⋮	
12	12 stations	
02	2 stations	All single wiring
⋮	⋮	
12	12 stations	

P: Flat ribbon cable (26 pins)

Symbol	Stations	Note
02	2 stations	All double wiring
⋮	⋮	
12	12 stations	
02	2 stations	All single wiring
⋮	⋮	
12	12 stations	

PG: Flat ribbon cable (20 pins)

Symbol	Stations	Note
02	2 stations	All double wiring
⋮	⋮	
09	9 stations	
02	2 stations	All single wiring
⋮	⋮	
12	12 stations	

PH: Flat ribbon cable (10 pins)

Symbol	Stations	Note
02	2 stations	All double wiring
⋮	⋮	
04	4 stations	
02	2 stations	All single wiring
⋮	⋮	
08	8 stations	

* This also includes the number of the blanking plate assembly.

❼ P, E port entry

U	U side*1
D	D side*1
B	Both sides

*1 Plugs are mounted on the opposite side of the selected ports.

❽ Thread type

Nil	Rc
00F	G
00N	NPT
00T	NPTF

❾ Mounting

Nil	Direct mounting	
D	DIN rail mounting (With DIN rail)	
D0	DIN rail mounting (Without DIN rail)	
D3	For 3 stations	Specify a length longer than that of the standard rail.
⋮	⋮	
D12	For 12 stations	

* Refer to page 295 for the fixation of DIN rail mounting type manifold.

How to Order Manifold Assembly

Example (SS5Y3-52F2-□)

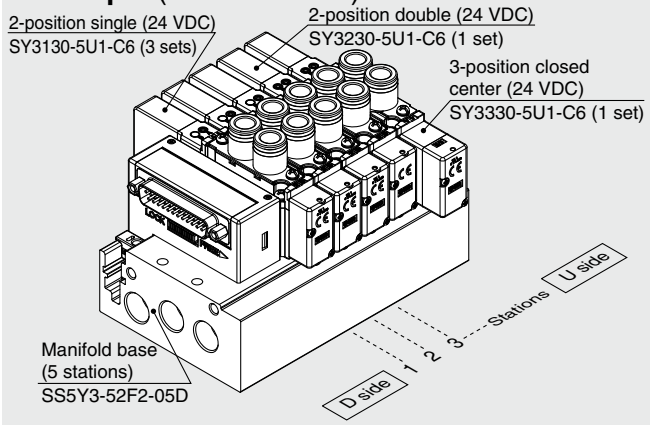

SS5Y3-52F2-05D ····· 1 set (Type 52 5-station manifold base part no.)
***SY3130-5U1-C6 ····· 3 sets (2-position single part no.)**
***SY3230-5U1-C6 ····· 1 set (2-position double part no.)**
***SY3330-5U1-C6 ····· 1 set (3-position closed center part no.)**
└→ The asterisk denotes the symbol for the assembly. Prefix it to the part numbers of the valve, etc.

- For the valve arrangement, the valve closest to the D side is considered the 1st station.
- Under the manifold part number, state the valves to be mounted in order starting with the 1st station as shown in the figure above. If the arrangement becomes too complicated, specify the details on a manifold specification sheet.

SMC

How to Order Valves (With mounting screw)

Refer to page 15 for valve specifications.

SY 3 1 3 0 □ □ □ □ – 5 □ □ 1 – C6 □ – □

❶ ❷ ❸ ❹ ❺ ❻ ❼ ❽ ❾ ❿ ⓫ ⓬ ⓭

❸: Top ported

❶ Series

3	SY3000
5	SY5000
7	SY7000

❷ Type of actuation

1	2-position	Single
2		Double
3	3-position	Closed center
4		Exhaust center
5		Pressure center
A*1	4-position dual 3-port	N.C./N.C.
B*1		N.O./N.O.
C*1		N.C./N.O.

*1 Only the rubber seal type is available for the 4-position dual 3-port valve.

❸ Seal type

0	Rubber seal
1	Metal seal

❹ Pilot type

Nil	Internal pilot
R	External pilot

❺ Back pressure check valve (Built-in valve type)

Nil	None
H	Built-in

* Only the rubber seal type is available.
* The back pressure check valve is not available for the 3-position type or the SY7000.

❻ Pilot valve option

Nil	Standard (0.7 MPa)
B	Quick response type (0.7 MPa)
K*1	High pressure type (1.0 MPa)

*1 Only the metal seal type is available for the high pressure type.

❼ Coil type

Nil	Standard
T	With power saving circuit (Continuous duty type)

* Be sure to select the power saving circuit type if the valve is to be continuously energized for long periods of time.
* Be careful of the energizing time when the power saving circuit is selected. Refer to page 292 for details.

❽ Rated voltage

5	24 VDC
6	12 VDC

❾ Light/surge voltage suppressor and common specification

Symbol	With light	Surge voltage suppressor	Common specification
Nil	—	—	Non-polar
R	—	●	
U	●		
S	—		Positive common
Z	●		
NS	—		Negative common
NZ	●		

* For the non-polar type, be careful of surge voltage intrusion. Refer to page 293 for details.
* Only "Z" and "NZ" types are available with a power saving circuit.

❿ Manual override

Nil: Non-locking push type

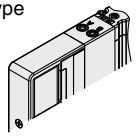

D: Push-turn locking slotted type

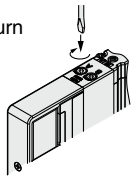

E: Push-turn locking lever type

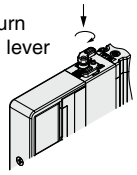

F: Slide locking type

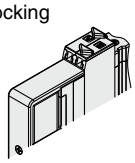

* Refer to page 34 for the safety slide locking manual override.

⓫ A, B port size

Thread piping

Symbol	Port size	Applicable series
M5	M5 x 0.8	SY3000
01	1/8	SY5000
02	1/4	SY7000

One-touch fitting (Metric)

Symbol	A, B port	SY3000	SY5000	SY7000
C2	ø2	●	—	—
C3	ø3.2	●	—	—
C4	ø4	●	●	—
C6	ø6	●	●	●
C8	ø8	—	●	●
C10	ø10	—	—	●
C12	ø12	—	—	●

One-touch fitting (Inch)

Symbol	A, B port	SY3000	SY5000	SY7000
N1	ø1/8"	●	—	—
N3	ø5/32"	●	●	—
N7	ø1/4"	●	●	●
N9	ø5/16"	—	●	●
N11	ø3/8"	—	—	●

⓬ Thread type

Nil	Rc
F	G
N	NPT
T	NPTF

* Only Nil is available for M5.

⓭ Type of mounting screw

Nil	Round head combination screw
B	Hexagon socket head cap screw
K	Round head combination screw (Drop prevention type)
H	Hexagon socket head cap screw (Drop prevention type)

* For "K" and "H," the valve body cover has a drop prevention construction to stop the mounting screws from falling out when the valve is removed for maintenance, etc.
* **When ordering a valve individually, the base gasket is not included.**
  Since the base gasket is attached to the manifold, please order the base gasket separately if it is needed for maintenance. Refer to page 266 for base gasket and mounting screw part numbers.
* "B" and "H" cannot be selected for the individual SUP/EXH spacer assembly or interface regulator.

Protective class class Ⅲ (Mark: ⧫)

Plug-in Metal Base | Type 52/Top Ported | D-sub Connector, Flat Ribbon Cable

Dimensions: SY3000 Series

SS5Y3-52(R) F/P/PG/PH 1/2 - Stations U/D/B -□(D)

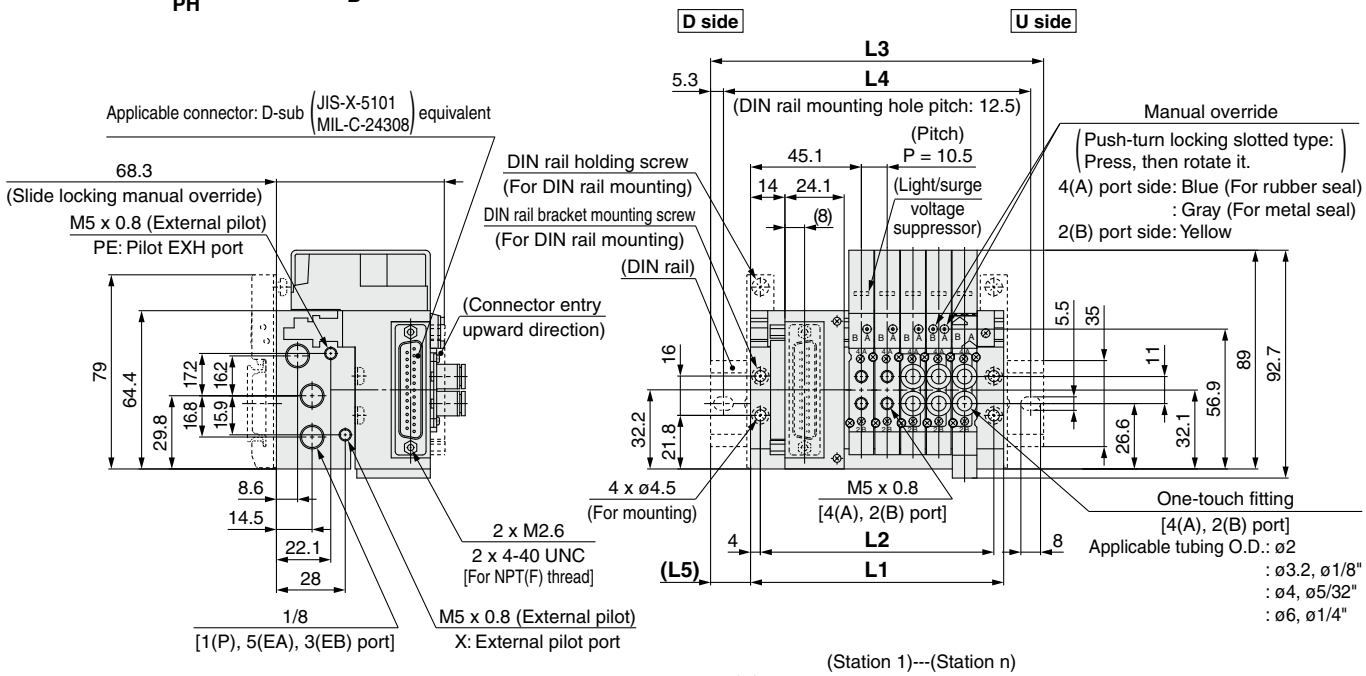

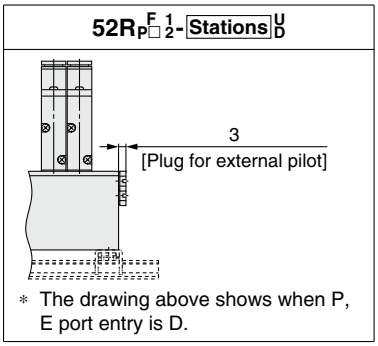

∗ The drawing above shows when P, E port entry is D.

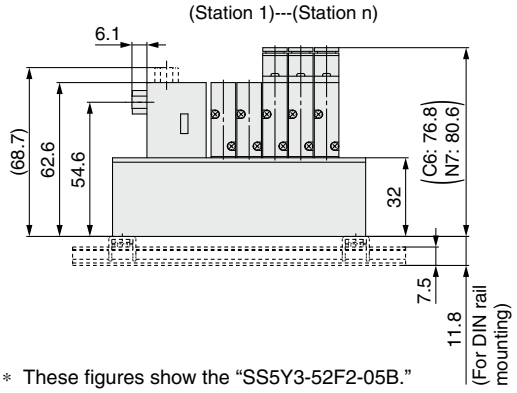

∗ These figures show the "SS5Y3-52F2-05B."

52P (26 pins)

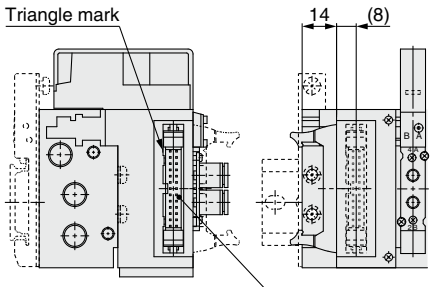

Applicable connector:
26 pins MIL type with strain relief
(Conforming to MIL-C-83503)

52PG (20 pins)

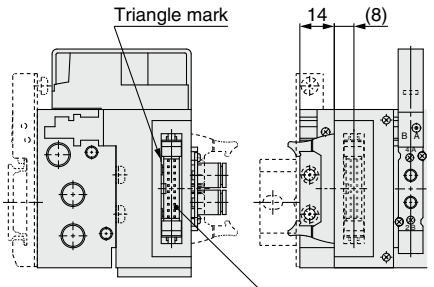

Applicable connector:
20 pins MIL type with strain relief
(Conforming to MIL-C-83503)

52PH (10 pins)

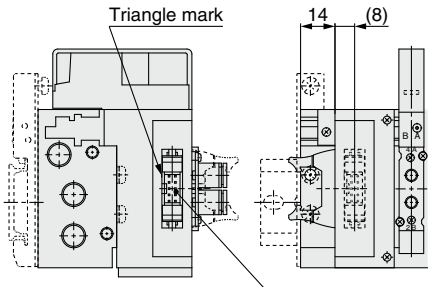

Applicable connector:
10 pins MIL type with strain relief
(Conforming to MIL-C-83503)

n: Stations	2	3	4	5	6	7	8	9	10	11	12
L1	71.5	82	92.5	103	113.5	124	134.5	145	155.5	166	176.5
L2	63.5	74	84.5	95	105.5	116	126.5	137	147.5	158	168.5
L3	98	110.5	123	135.5	148	160.5	160.5	173	185.5	198	210.5
L4	87.5	100	112.5	125	137.5	150	150	162.5	175	187.5	200
L5	13.5	14.5	15.5	16.5	17.5	18.5	13	14	15	16	17

Plug-in Metal Base | Type 52/Top Ported | D-sub Connector, Flat Ribbon Cable

Dimensions: SY5000 Series

SS5Y5-52(R) F/P/PG/PH 1/2 - Stations U/D/B - □(D)

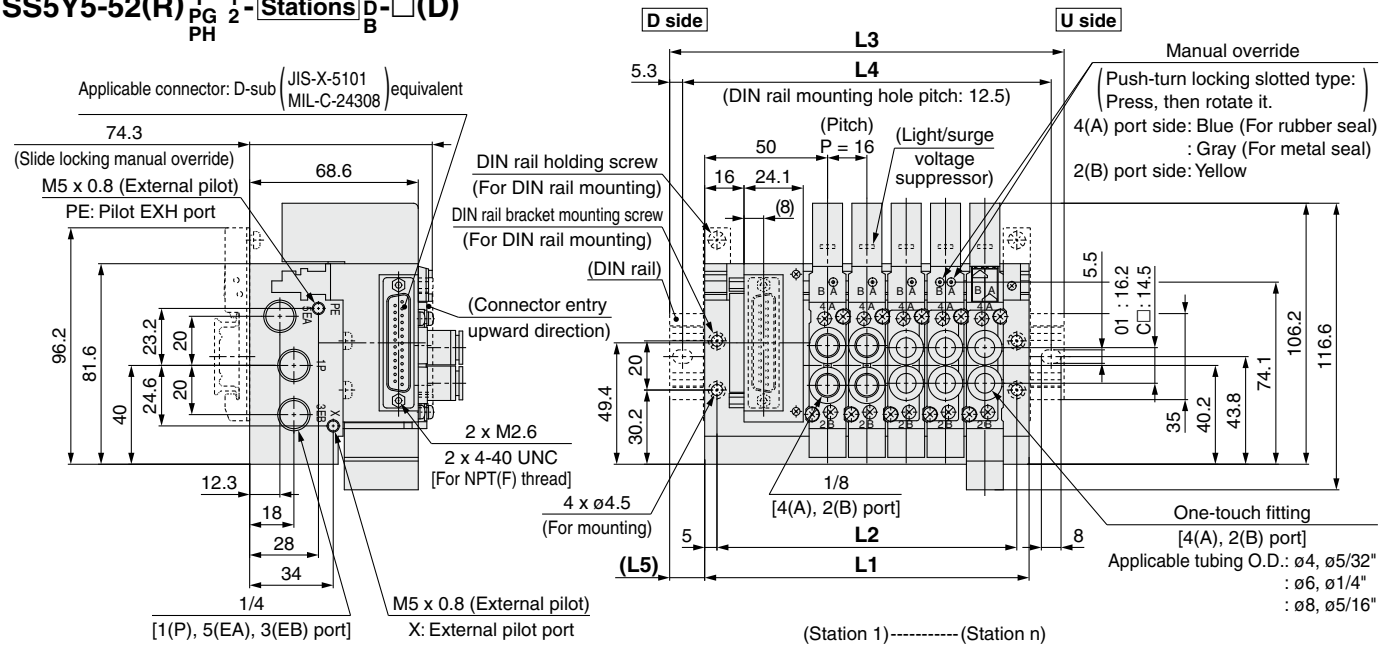

52P (26 pins)

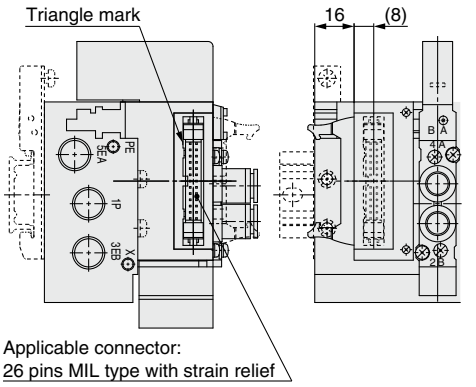

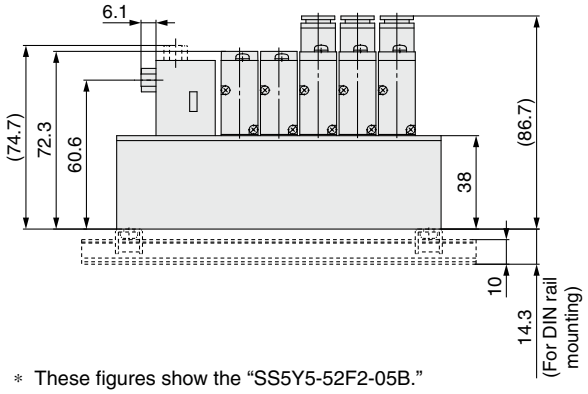

∗ These figures show the "SS5Y5-52F2-05B."

52PG (20 pins)

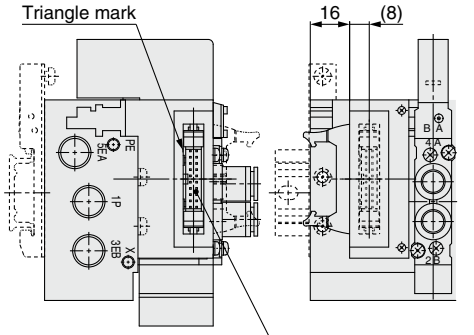

52PH (10 pins)

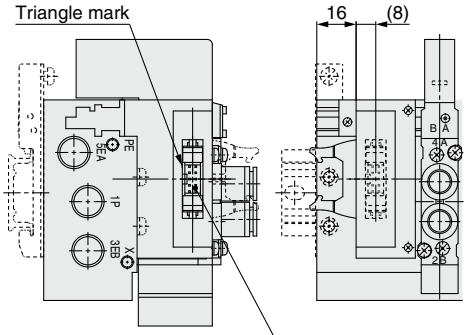

52R P□ F/1/2 - Stations U/D

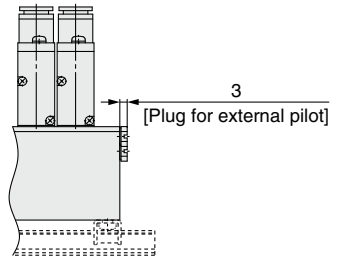

∗ The drawing above shows when P, E port entry is D.

n: Stations	2	3	4	5	6	7	8	9	10	11	12
L1	84	100	116	132	148	164	180	196	212	228	244
L2	74	90	106	122	138	154	170	186	202	218	234
L3	110.5	135.5	148	160.5	173	198	210.5	223	248	260.5	273
L4	100	125	137.5	150	162.5	187.5	200	212.5	237.5	250	262.5
L5	13.5	18	16	14.5	12.5	17	15.5	13.5	18	16.5	14.5

Plug-in Metal Base | Type 52/Top Ported | D-sub Connector, Flat Ribbon Cable

Dimensions: SY7000 Series

SS5Y7-52(R) F/P/PG/PH 1/2 - Stations U/D/B - □(D)

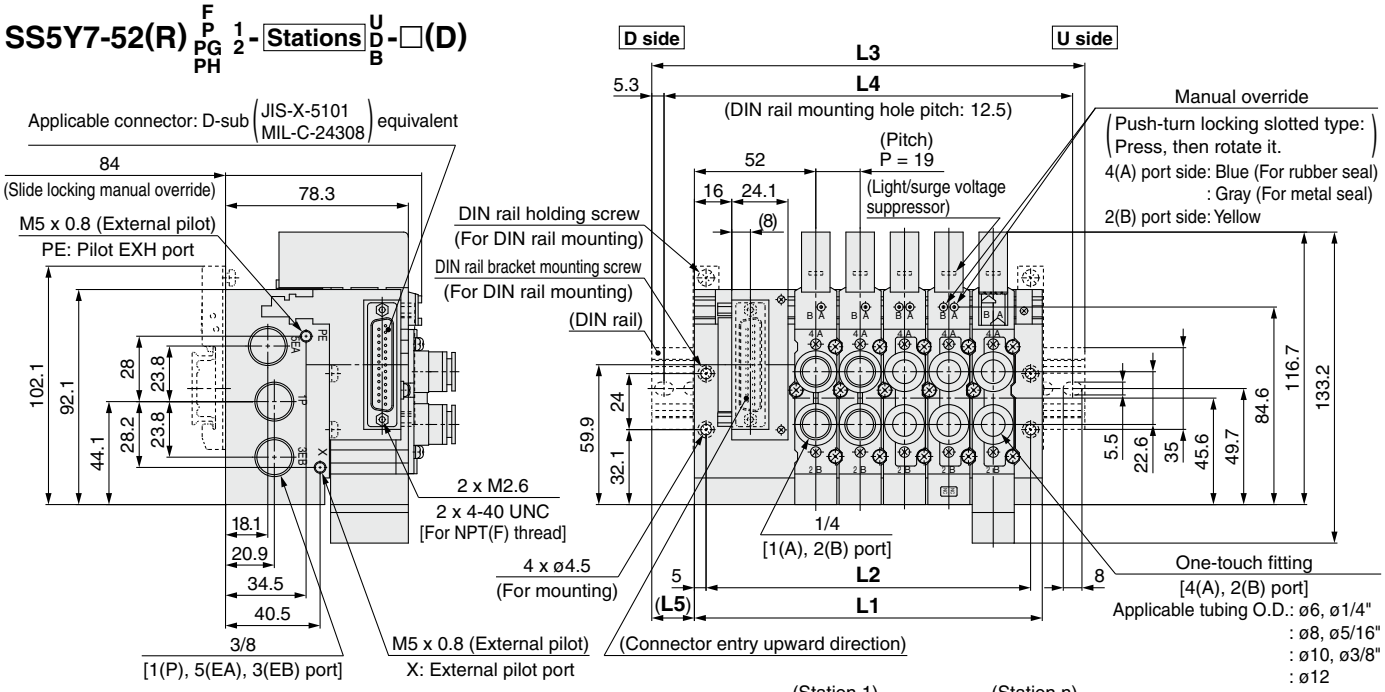

52P (26 pins)

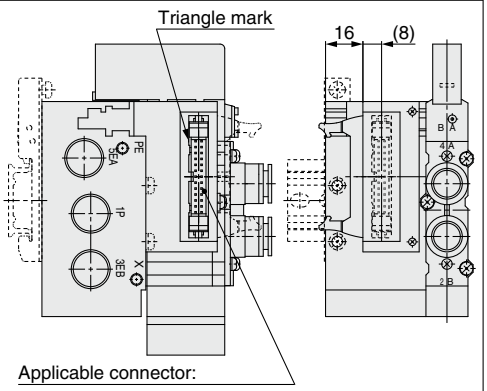

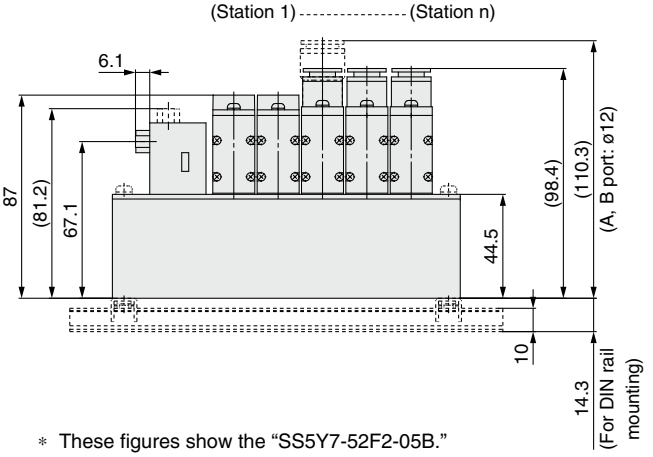

∗ These figures show the "SS5Y7-52F2-05B."

52PG (20 pins)

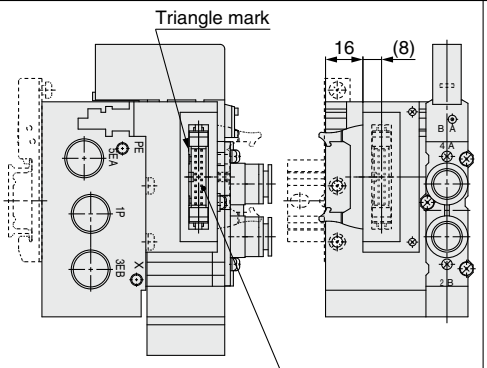

52PH (10 pins)

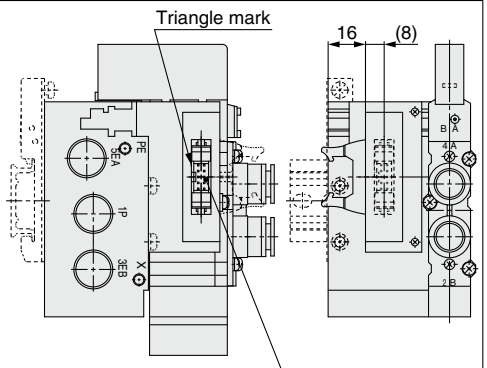

52R P□ F 1/2 - Stations U/D

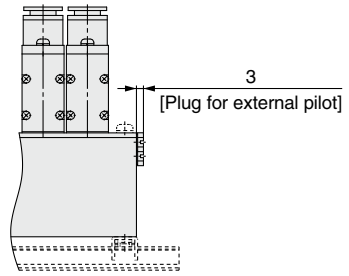

∗ The drawing above shows when P, E port entry is D.

n: Stations	2	3	4	5	6	7	8	9	10	11	12
L1	92	111	130	149	168	187	206	225	244	263	282
L2	82	101	120	139	158	177	196	215	234	253	272
L3	123	148	160.5	185.5	198	223	235.5	260.5	273	298	310.5
L4	112.5	137.5	150	175	187.5	212.5	225	250	262.5	287.5	300
L5	15.5	18.5	15.5	18.5	15	18	15	18	14.5	17.5	14.5

Electrical Wiring Specifications

D-sub connector

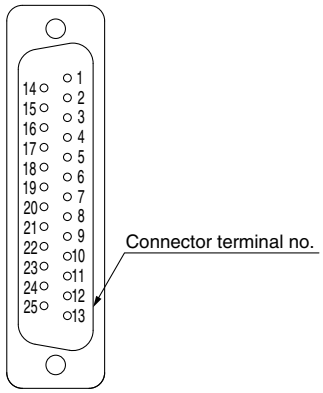

<All single wiring>

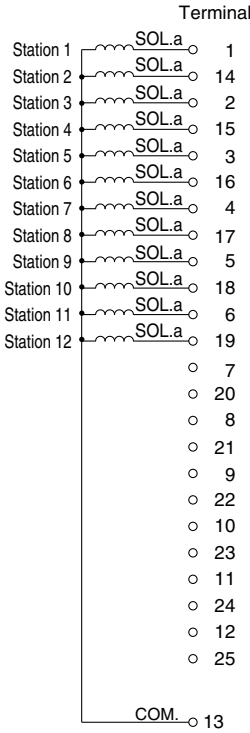

<All double wiring>

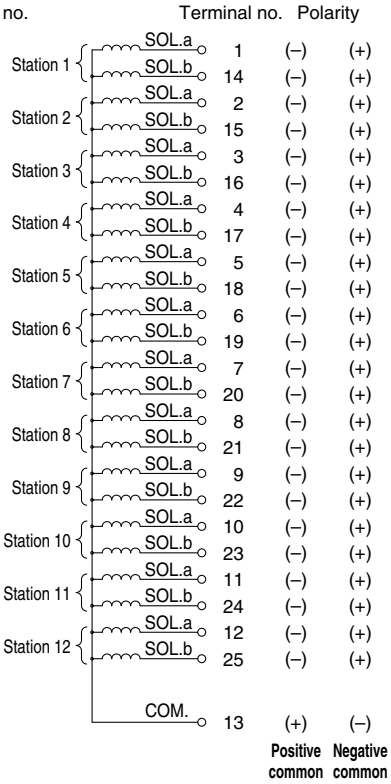

* When using a valve with no polarity, either positive common or negative common can be used.

Cable Assembly

AXT100-DS25- 015 / 030 / 050 **(N)** **[IP40 compliant]**

Nil: Metric size
N: Inch size

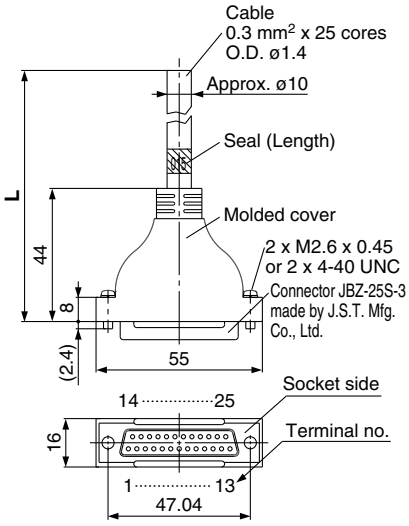

Lead wire color for D-sub connector cable assembly by terminal number

Terminal no.	Lead wire color	Dot marking
1	Black	None
2	Brown	None
3	Red	None
4	Orange	None
5	Yellow	None
6	Pink	None
7	Blue	None
8	Purple	White
9	Gray	Black
10	White	Black
11	White	Red
12	Yellow	Red
13	Orange	Red
14	Yellow	Black
15	Pink	Black
16	Blue	White
17	Purple	None
18	Gray	None
19	Orange	Black
20	Red	White
21	Brown	White
22	Pink	Red
23	Gray	Red
24	Black	White
25	White	None

D-sub connector cable assembly

Cable length (**L**)	Assembly part no.	Note
1.5 m	AXT100-DS25-015	Cable 0.3 mm² x 25 cores
3 m	AXT100-DS25-030	
5 m	AXT100-DS25-050	

* When using a standard commercial connector, use a 25-pin type female connector conforming to MIL-C-24308.
* Cannot be used for movable wiring
* Lengths other than the above are also available. Please contact SMC for details.

Electrical characteristics

Item	Property
Conductor resistance Ω/km, 20°C	65 or less
Voltage limit V, 1 minute, AC	1000
Insulation resistance MΩ/km, 20°C	5 or more

* The minimum bending radius of the D-sub connector cable is 20 mm.

Connector Manufacturer's Example

- Fujitsu Limited
- Japan Aviation Electronics Industry, Limited
- J.S.T. Mfg. Co., Ltd.
- HIROSE ELECTRIC CO., LTD.

Electrical Wiring Specifications

Flat ribbon cable connector

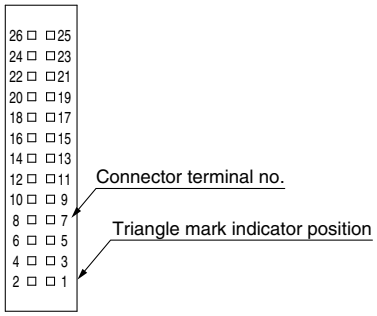

P: Flat ribbon cable (26 pins)

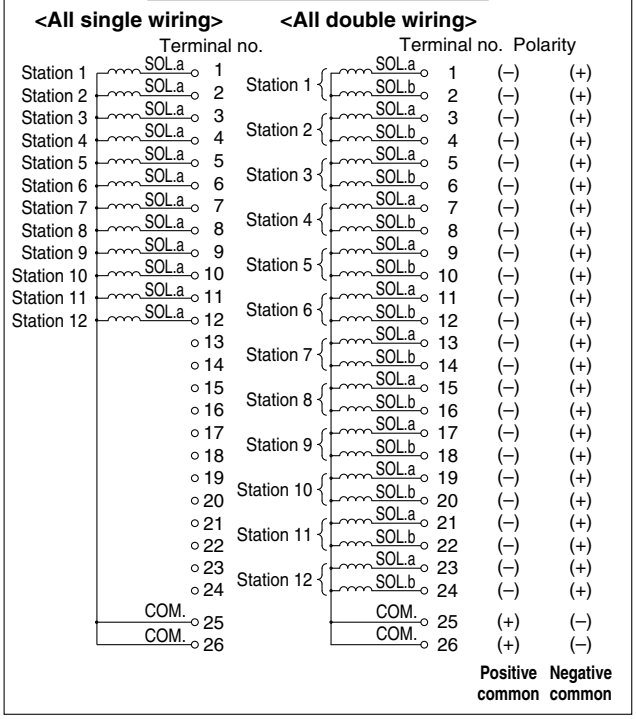

PG: Flat ribbon cable (20 pins)

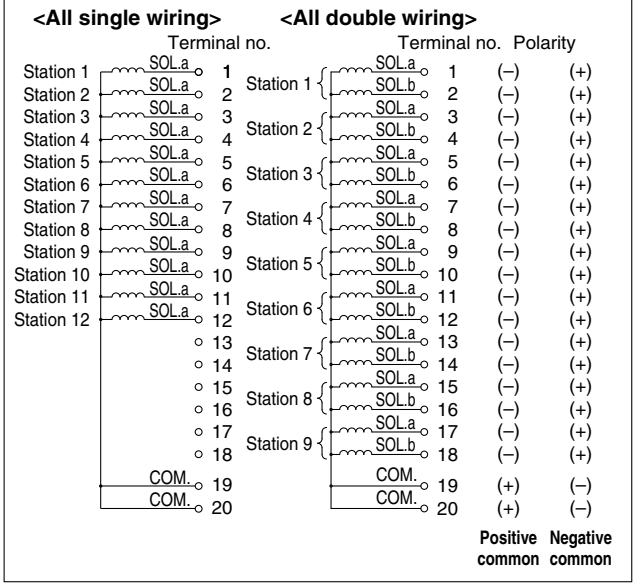

* When using a valve with no polarity, either positive common or negative common can be used.

Cable Assembly

AXT100-FC 10 1 / 20 2 / 26 3

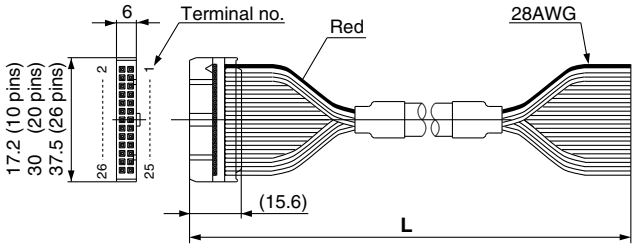

Flat ribbon cable connector assembly

Cable length (**L**)	Assembly part no.		
	26 pins	20 pins	10 pins
1.5 m	AXT100-FC26-1	AXT100-FC20-1	AXT100-FC10-1
3 m	AXT100-FC26-2	AXT100-FC20-2	AXT100-FC10-2
5 m	AXT100-FC26-3	AXT100-FC20-3	AXT100-FC10-3

* When using a standard commercial connector, use a 26-pin, 20-pin, or 10-pin type connector conforming to MIL-C-83503 with strain relief.
* Cannot be used for movable wiring
* Lengths other than the above are also available. Please contact SMC for details.

Connector Manufacturer's Example

- HIROSE ELECTRIC CO., LTD.
- 3M Japan Limited
- Fujitsu Limited
- Japan Aviation Electronics Industry, Limited
- J.S.T. Mfg. Co., Ltd.
- Oki Electric Cable Co., Ltd.

PH: Flat ribbon cable (10 pins)

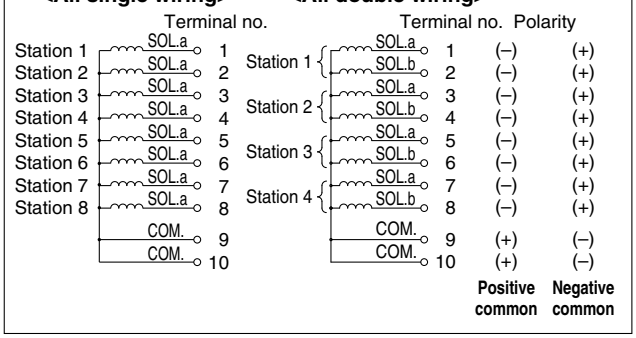

Type 50
Side Ported

Type 51
Bottom Ported

Plug-in Metal Base EX510

SY3000/5000/7000 Series

How to Order Manifolds

SS5Y 3 – 50 S5 ❸ – ❹ 05 ❻ – C6 ❽ ❾

❶ ❷

❶ Series

3	SY3000
5	SY5000
7	SY7000

❷ Type

50	Side ported
51	Bottom ported
50R	Side ported, External pilot

∗ External pilot is not available for the bottom-ported type.

❸ SI unit output polarity

Nil	Positive common
N	Negative common

❹ Wiring type

Nil	All double wiring∗1
S	All single wiring∗2

∗1 All double wiring: 2-position single, double, 3-position, and 4-position valves can be used on all manifold stations.
∗2 All single wiring: Available only for the manifold which has 2-position single for all stations
Note that 2-position double, 3-, or 4-position valves cannot be used.
∗ If a mix of single and double wiring is required, it is supplied as a special order.

❺ Valve stations

Symbol	Stations	Note
02	2 stations	All double wiring
⋮	⋮	
08	8 stations	

Symbol	Stations	Note
02	2 stations	All single wiring
⋮	⋮	
12	12 stations	

∗ This also includes the number of the blanking plate assembly.

❻ P, E port entry

U	U side∗1
D	D side∗1∗2
B	Both sides

∗1 Plugs are mounted on the opposite side of the selected ports.
∗2 Only D side is available for the type 51 bottom-ported type.

❼ A, B port size

Thread piping

Symbol	A, B port	SY3000	SY5000	SY7000
M5	M5 x 0.8	●	—	—
01	1/8	●	●	—
02	1/4	—	●	●

One-touch fitting (Metric)

	Symbol	A, B port	SY3000	SY5000	SY7000
Fixed	**C2**	ø2	●	—	—
	C3	ø3.2	●	—	—
	C4	ø4	●	●	—
	C6	ø6	●	●	—
	C8	ø8	—	●	●
	C10	ø10	—	—	●
Replaceable	**KC2**	ø2	●	—	—
	KC3	ø3.2	●	—	—
	KC4	ø4	●	●	—
	KC6	ø6	●	●	●
	KC8	ø8	—	●	●
	KC10	ø10	—	—	●
	KC12	ø12	—	—	●
	M∗1	Mixed sizes	●	●	●
P, E port size (Thread piping)			1/8	1/4	3/8

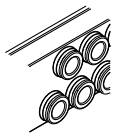

Type 50 (Side ported)

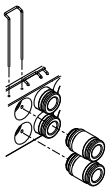

Type 51 (Bottom ported)

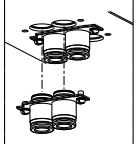

One-touch fitting (Inch)

	Symbol	A, B port	SY3000	SY5000	SY7000
Fixed	**N1**	ø1/8"	●	—	—
	N3	ø5/32"	●	●	—
	N7	ø1/4"	●	●	—
	N9	ø5/16"	—	●	●
	N11	ø3/8"	—	—	●
Replaceable	**KN1**	ø1/8"	●	—	—
	KN3	ø5/32"	●	●	—
	KN7	ø1/4"	●	●	●
	KN9	ø5/16"	—	●	●
	KN11	ø3/8"	—	—	●
	M∗1	Mixed sizes	●	●	●
P, E port size (Thread piping)			1/8	1/4	3/8

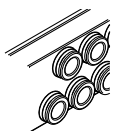

Type 50 (Side ported)

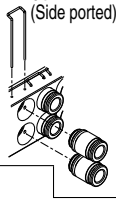

Type 51 (Bottom ported)

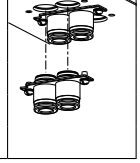

∗1 When ports are of mixed sizes, indicate the piping specifications on the manifold specification sheet.

How to Order Manifold Assembly

Example (SS5Y3-50S5-□)

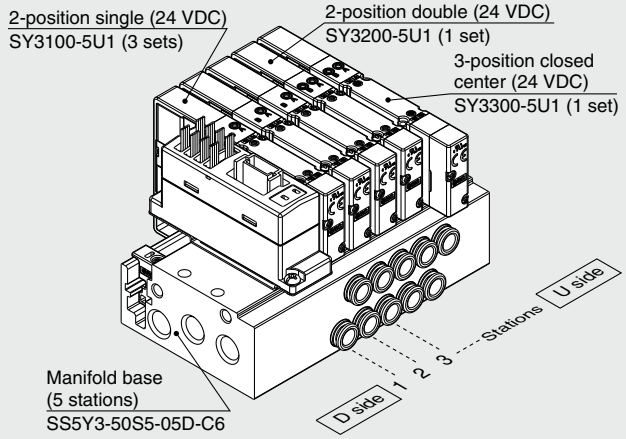

SS5Y3-50S5-05D-C6 ··· 1 set (Type 50 5-station manifold base part no.)
∗SY3100-5U1 ····· 3 sets (2-position single part no.)
∗SY3200-5U1 ····· 1 set (2-position double part no.)
∗SY3300-5U1 ····· 1 set (3-position closed center part no.)
→ The asterisk denotes the symbol for the assembly. Prefix it to the part numbers of the valve, etc.

- For the valve arrangement, the valve closest to the D side is considered the 1st station.
- Under the manifold part number, state the valves to be mounted in order starting with the 1st station as shown in the figure above. If the arrangement becomes too complicated, specify the details on a manifold specification sheet.

∗ When mixing top-ported configurations, select from those listed on page 261. In such cases, use caution as there is also output on the A and B ports on the base side. Specify on the manifold specification sheet if plugs are required for the A and B ports on the base side.

❽ Thread type

Nil	Rc
F	G
N	NPT
T	NPTF

❾ Mounting

Nil	Direct mounting	
D	DIN rail mounting (With DIN rail)	
D0	DIN rail mounting (Without DIN rail)	
D3	For 3 stations	Specify a length longer than that of the standard rail.
⋮	⋮	
D12	For 12 stations	

∗ Only direct mounting is available for the type 51 bottom-ported type.
∗ Refer to page 295 for the fixation of DIN rail mounting type manifold.

For details on the EX510 Gateway Type Serial Transmission System, refer to the **Web Catalog** and the Operation Manual. Please download the Operation Manual via the SMC website, https://www.smcworld.com

How to Order Valves (With mounting screw)

Refer to page 15 for valve specifications.

SY 3 1 0 0 □ □ □ □ – 5 □ □ 1 – □

❶ ❷ ❸ ❹ ❺ ❻ ❼ ❽ ❾ ❿ ⓫

● **Base mounted**

❶ Series

3	SY3000
5	SY5000
7	SY7000

❷ Type of actuation

1	2-position	Single
2		Double
3	3-position	Closed center
4		Exhaust center
5		Pressure center
A∗1	4-position dual 3-port	N.C./N.C.
B∗1		N.O./N.O.
C∗1		N.C./N.O.

∗1 Only the rubber seal type is available for the 4-position dual 3-port valve.

❸ Seal type

0	Rubber seal
1	Metal seal

❹ Pilot type

Nil	Internal pilot
R	External pilot

❺ Back pressure check valve (Built-in valve type)

Nil	None
H	Built-in

∗ Only the rubber seal type is available.
∗ The back pressure check valve is not available for the 3-position type or the SY7000.

❻ Pilot valve option

Nil	Standard (0.7 MPa)
B	Quick response type (0.7 MPa)
K∗1	High pressure type (1.0 MPa)

∗1 Only the metal seal type is available for the high pressure type.

❼ Coil type

Nil	Standard
T	With power saving circuit (Continuous duty type)

∗ Be sure to select the power saving circuit type if the valve is to be continuously energized for long periods of time.
∗ Be careful of the energizing time when the power saving circuit is selected. Refer to page 292 for details.

❽ Rated voltage

5	24 VDC

❾ Light/surge voltage suppressor and common specification

Symbol	With light	Surge voltage suppressor	Common specification
R	—	●	Non-polar
U	●		
S	—		Positive common
Z	●		
NS	—		Negative common
NZ	●		

∗ Only "Z" and "NZ" types are available with a power saving circuit. Select "R," "U," "S," or "Z" for the valve when the SI unit output polarity is Nil (positive common). Select "R," "U," "NS," or "NZ" for the valve when the SI unit output polarity is N (negative common).

❿ Manual override

Nil: Non-locking push type

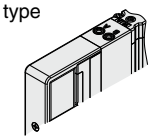

D: Push-turn locking slotted type

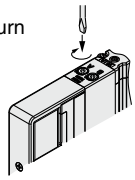

E: Push-turn locking lever type

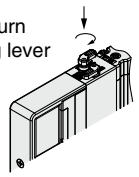

F: Slide locking type

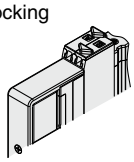

∗ Refer to page 34 for the safety slide locking manual override.

⓫ Type of mounting screw

Nil	Round head combination screw
B	Hexagon socket head cap screw
K	Round head combination screw (Drop prevention type)
H	Hexagon socket head cap screw (Drop prevention type)

∗ For "K" and "H," the valve body cover has a drop prevention construction to stop the mounting screws from falling out when the valve is removed for maintenance, etc.
∗ **When ordering a valve individually, the base gasket is not included.**
Since the base gasket is attached to the manifold, please order the base gasket separately if it is needed for maintenance. Refer to page 266 for base gasket and mounting screw part numbers.
∗ "B" and "H" cannot be selected for the individual SUP/EXH spacer assembly, interface regulator, or double check spacer assembly with residual pressure release valve.

⚠ Protective class class Ⅲ (Mark: ⧫)

Plug-in Metal Base | Type 50/Side Ported | EX510

Dimensions: SY3000 Series

SS5Y3-50(R)S5□-[Stations]{U/D/B}-{M5/C□, N□/KC□, KN□}□(D)

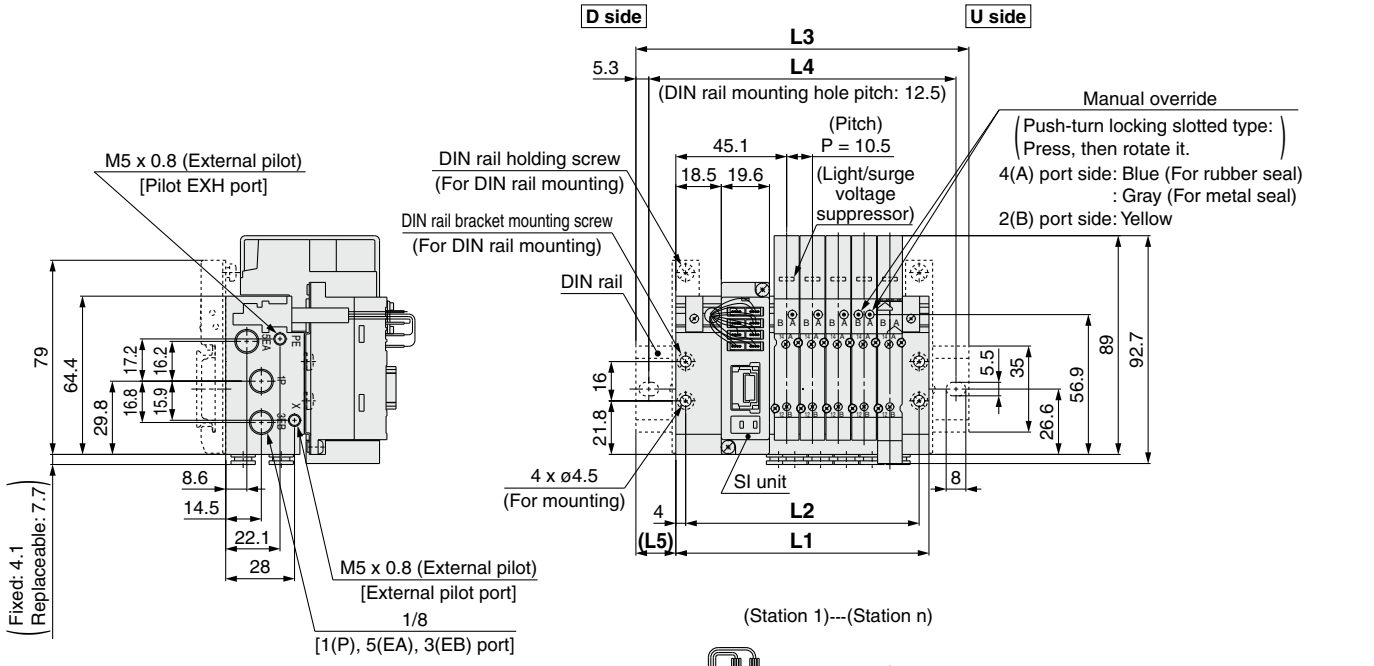

50RS5□-[Stations]{U/D}

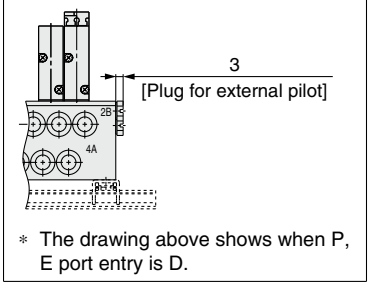

∗ The drawing above shows when P, E port entry is D.

(Station 1)---(Station n)

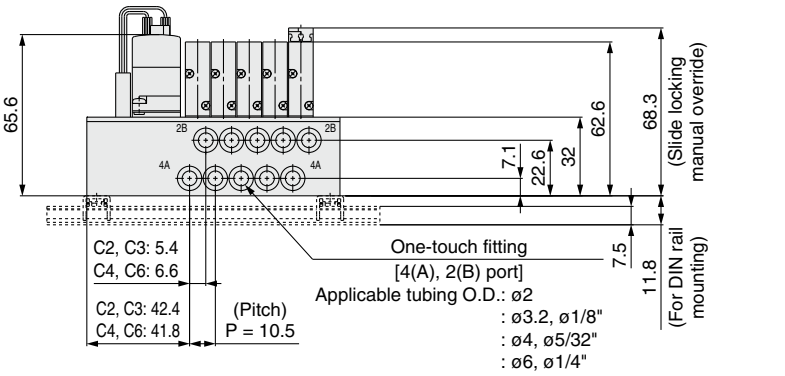

∗ These figures show the "SS5Y3-50S5-05B-C6."

Port size M5

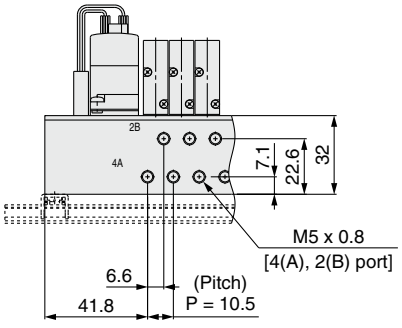

One-touch fitting (Replaceable)

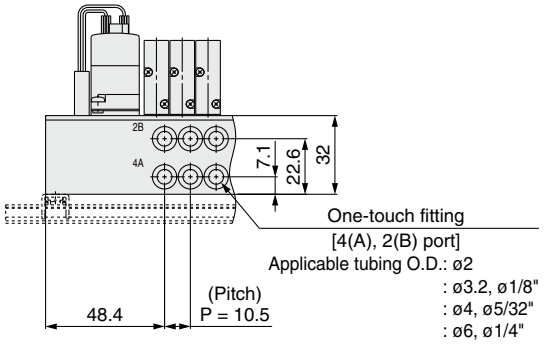

n: Stations	2	3	4	5	6	7	8	9	10	11	12
L1	71.5	82	92.5	103	113.5	124	134.5	145	155.5	166	176.5
L2	63.5	74	84.5	95	105.5	116	126.5	137	147.5	158	168.5
L3	98	110.5	123	135.5	148	160.5	160.5	173	185.5	198	210.5
L4	87.5	100	112.5	125	137.5	150	150	162.5	175	187.5	200
L5	13.5	14.5	15.5	16.5	17.5	18.5	13	14	15	16	17

Dimensions: SY3000 Series

SS5Y3-50(R)S5□-Stations U/D/B-01□(D)

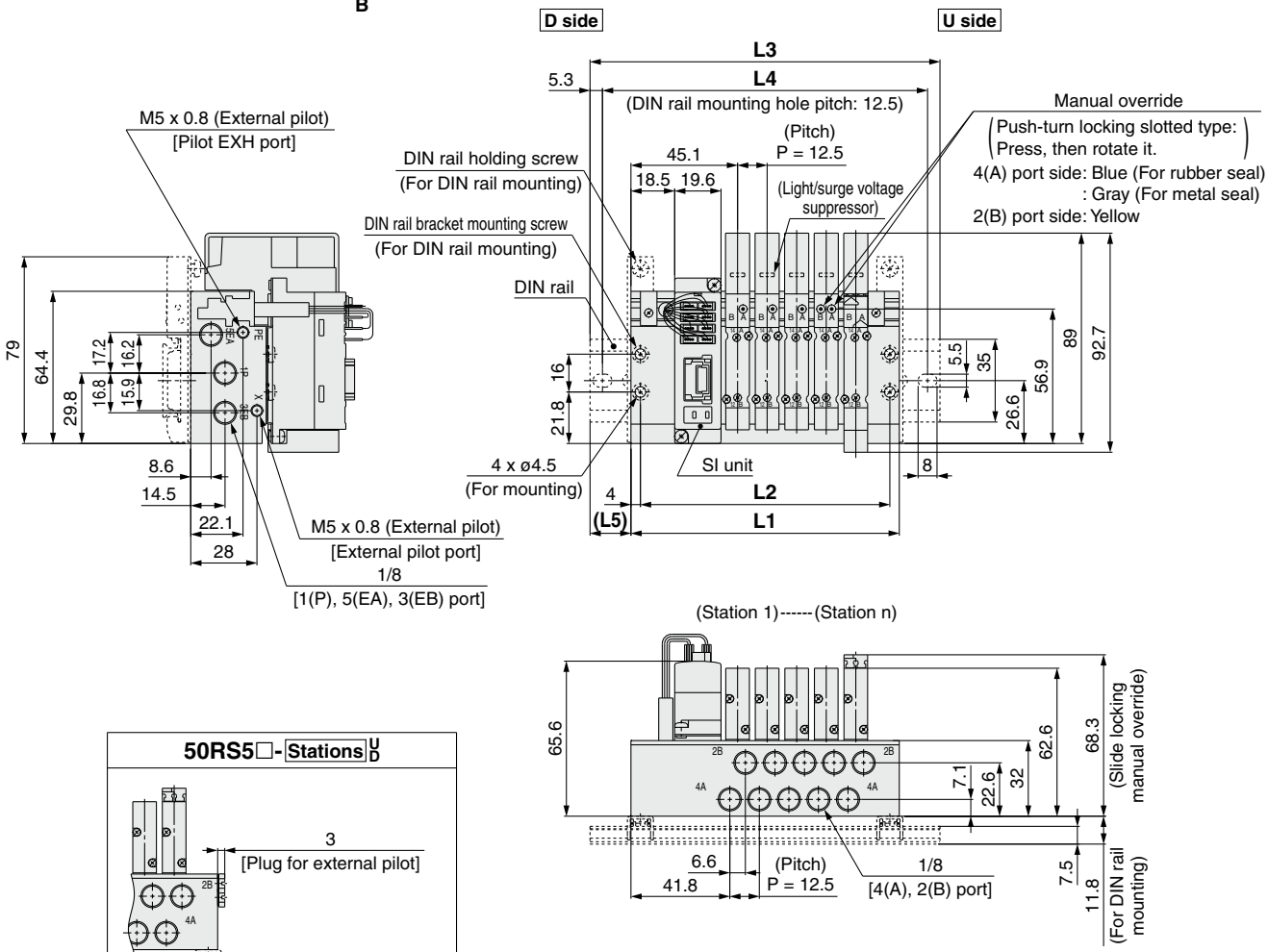

50RS5□-Stations U/D

∗ The drawing above shows when P, E port entry is D.

∗ These figures show the "SS5Y3-50S5-05B-01."

n: Stations	2	3	4	5	6	7	8	9	10	11	12
L1	76	88.5	101	113.5	126	138.5	151	163.5	176	188.5	201
L2	68	80.5	93	105.5	118	130.5	143	155.5	168	180.5	193
L3	110.5	123	135.5	148	160.5	173	185.5	198	210.5	223	235.5
L4	100	112.5	125	137.5	150	162.5	175	187.5	200	212.5	225
L5	17.5	17.5	17.5	17.5	17.5	17.5	17.5	17.5	17.5	17.5	17.5

Plug-in Metal Base | Type 50/Side Ported | EX510

Dimensions: SY5000 Series

SS5Y5-50(R)S5□-Stations U/D/B 01-C□, N□ / KC□, KN□ □(D)

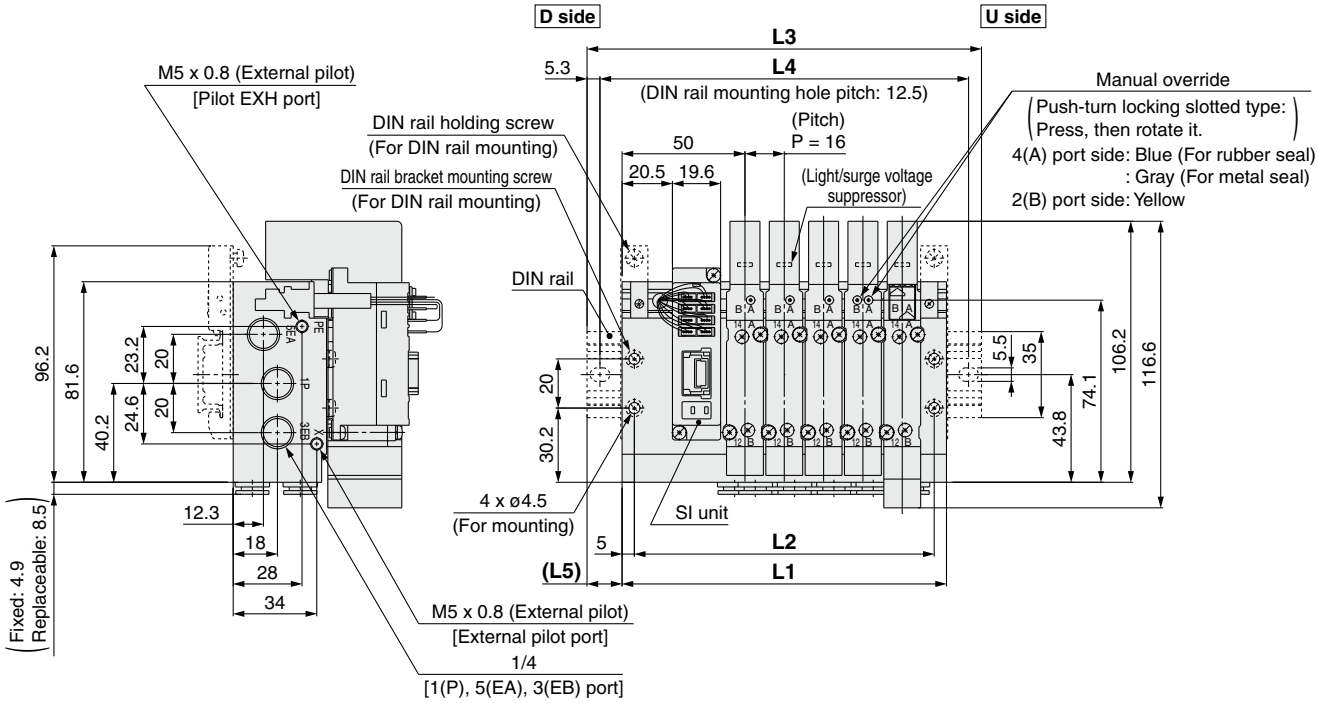

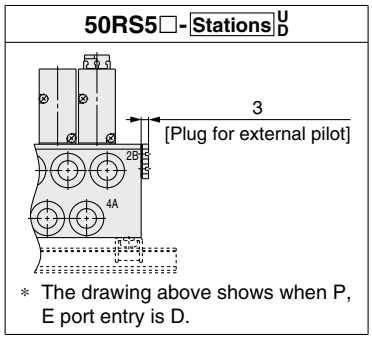

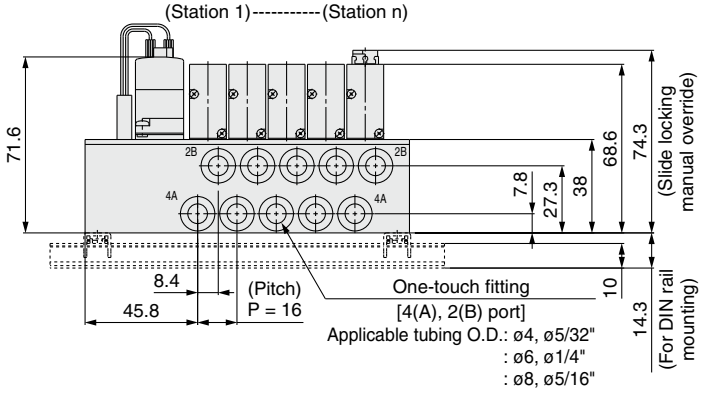

* These figures show the "SS5Y5-50S5-05B-C8."

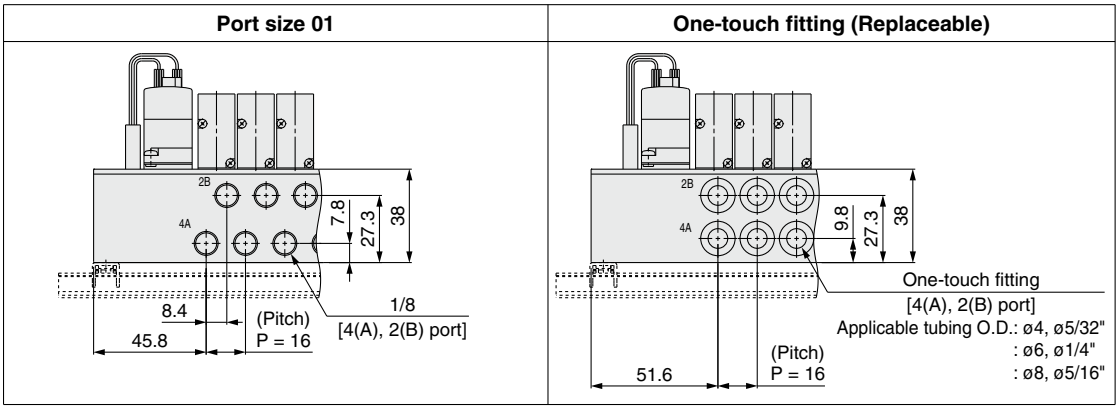

n: Stations	2	3	4	5	6	7	8	9	10	11	12
L1	84	100	116	132	148	164	180	196	212	228	244
L2	74	90	106	122	138	154	170	186	202	218	234
L3	110.5	135.5	148	160.5	173	198	210.5	223	248	260.5	273
L4	100	125	137.5	150	162.5	187.5	200	212.5	237.5	250	262.5
L5	13.5	18	16	14.5	12.5	17	15.5	13.5	18	16.5	14.5

Dimensions: SY5000 Series

SS5Y5-50(R)S5□-Stations U/D/B-02□(D)

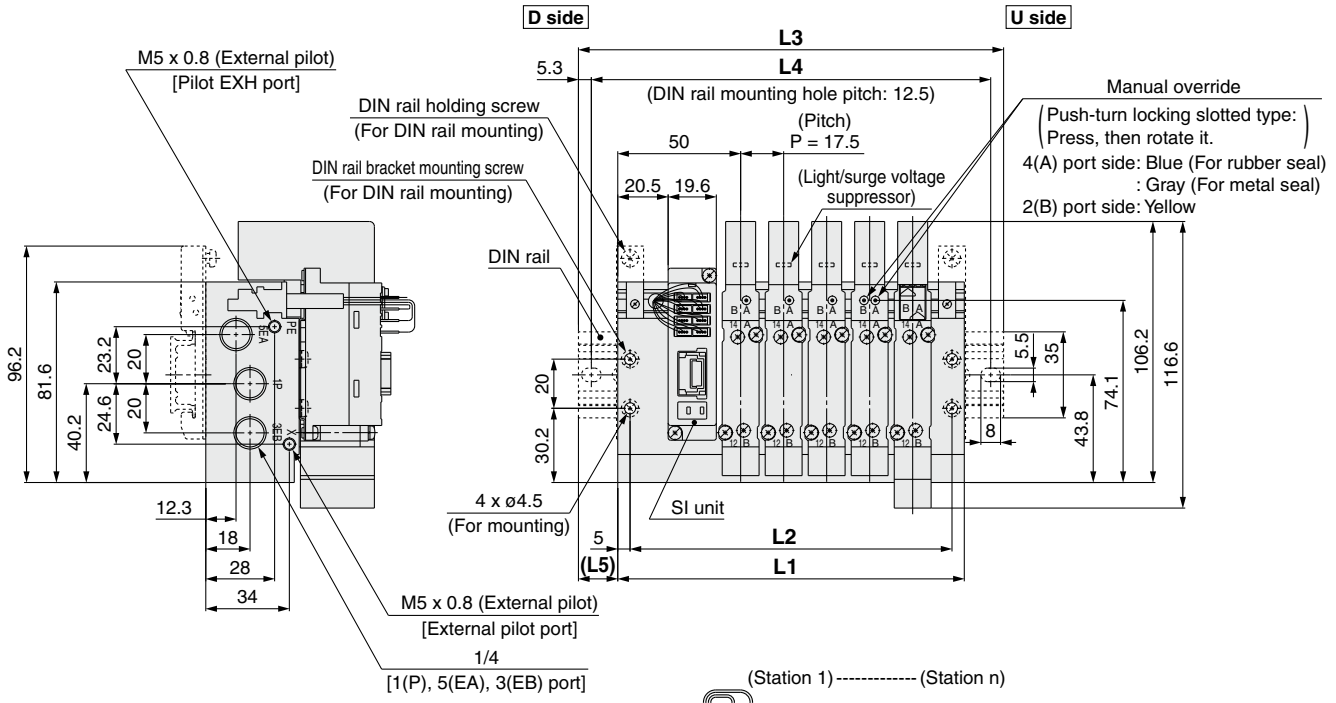

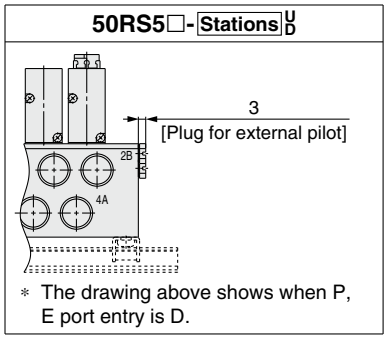

* The drawing above shows when P, E port entry is D.

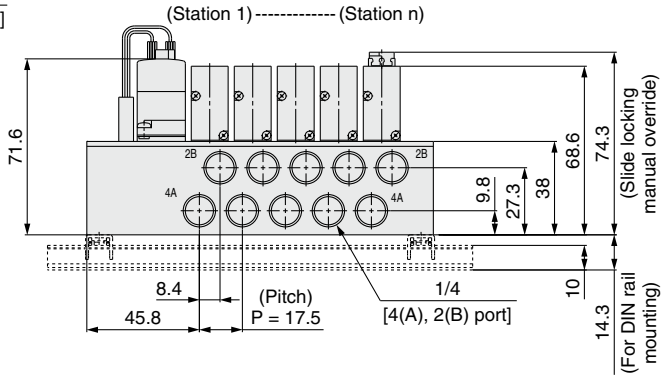

* These figures show the "SS5Y5-50S5-05B-02."

n: Stations	2	3	4	5	6	7	8	9	10	11	12
L1	88.5	106	123.5	141	158.5	176	193.5	211	228.5	246	263.5
L2	78.5	96	113.5	131	148.5	166	183.5	201	218.5	236	253.5
L3	123	135.5	148	173	185.5	210.5	223	235.5	260.5	273	298
L4	112.5	125	137.5	162.5	175	200	212.5	225	250	262.5	287.5
L5	17.5	15	12.5	16	13.5	17.5	15	12.5	16	13.5	17.5

Dimensions: SY7000 Series

SS5Y7-50(R)S5□-Stations U/D/B 02 C□, N□ KC□, KN□ □(D)

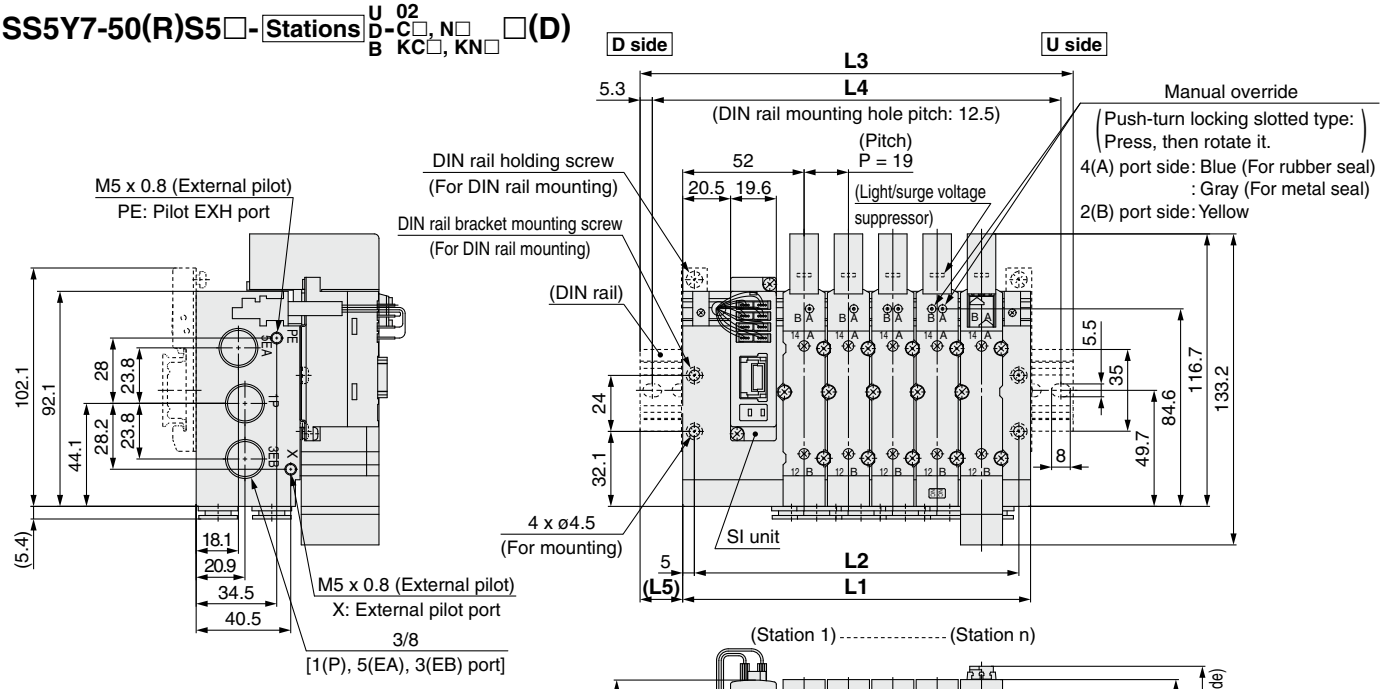

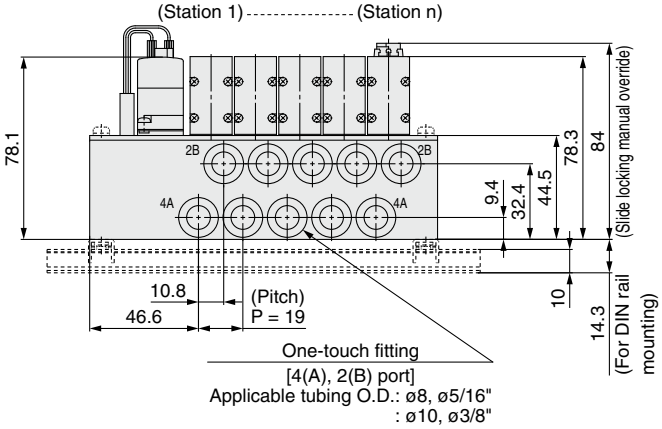

＊ These figures show the “SS5Y7-50S5-05B-C10.”

50RS5□-Stations U/D

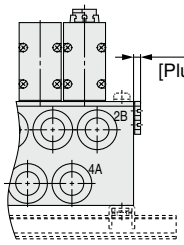

＊ The drawing above shows when P, E port entry is D.

Port size 02

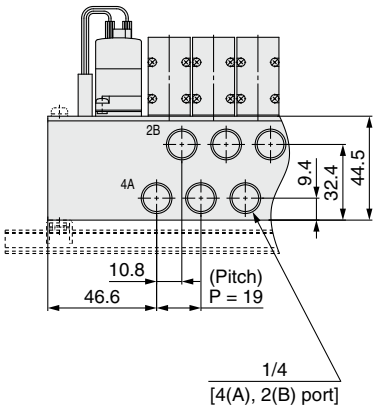

One-touch fitting (Replaceable)

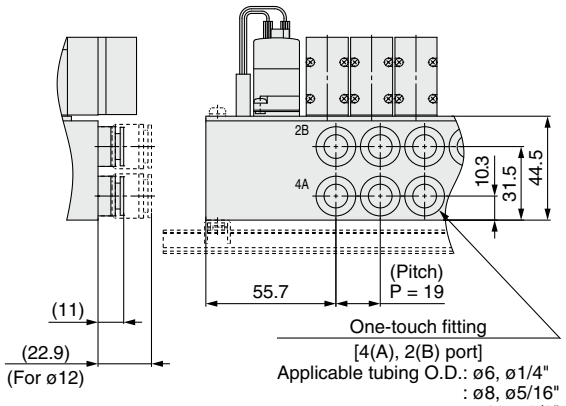

n: Stations	2	3	4	5	6	7	8	9	10	11	12
L1	92	111	130	149	168	187	206	225	244	263	282
L2	82	101	120	139	158	177	196	215	234	253	272
L3	123	148	160.5	185.5	198	223	235.5	260.5	273	298	310.5
L4	112.5	137.5	150	175	187.5	212.5	225	250	262.5	287.5	300
L5	15.5	18.5	15.5	18.5	15	18	15	18	14.5	17.5	14.5

Plug-in Metal Base | Type 51/Bottom Ported | EX510

Dimensions: SY3000 Series

SS5Y3-51S5□-Stations D-C□, N□, KC□, KN□ M5, 01 □

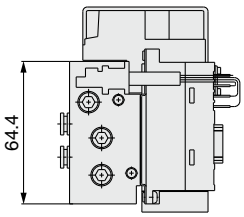

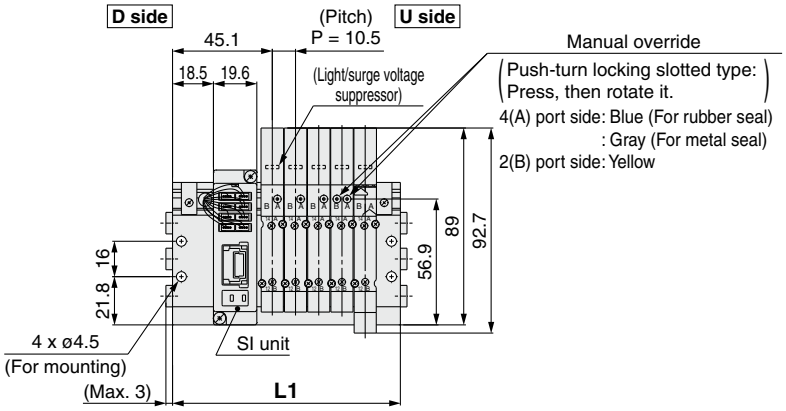

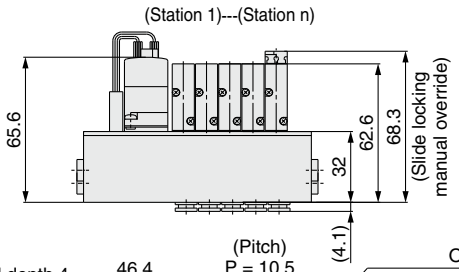

Panel fitting dimensions

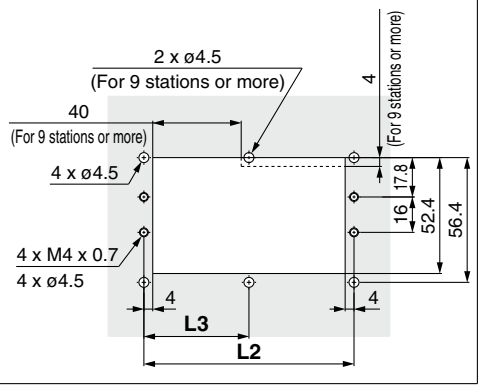

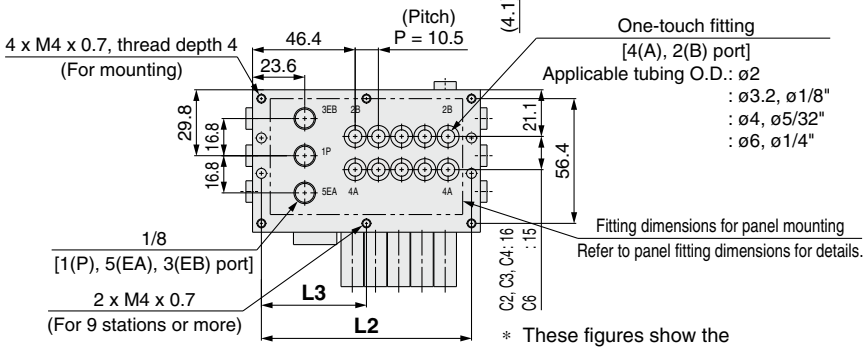

* These figures show the "SS5Y3-51S5-05D-C6."

Port size M5

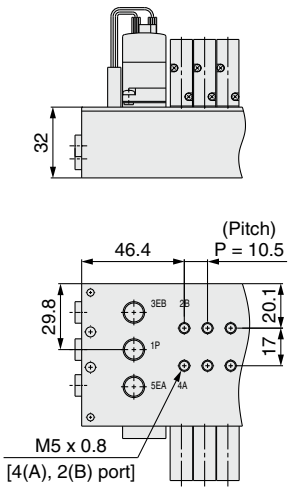

Port size 01

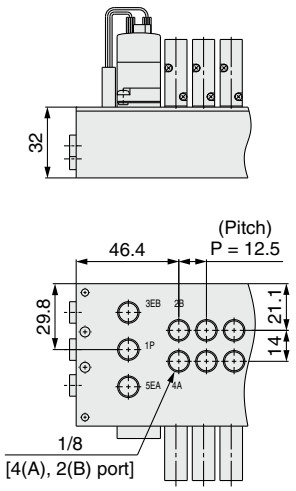

One-touch fitting (Replaceable)

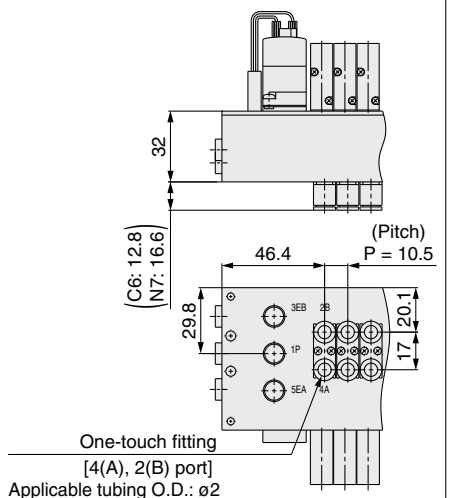

Port Sizes M5, C□, N□, KC□, KN□

n: Stations	2	3	4	5	6	7	8	9	10	11	12
L1	71.5	82	92.5	103	113.5	124	134.5	145	155.5	166	176.5
L2	63.5	74	84.5	95	105.5	116	126.5	137	147.5	158	168.5
L3	—	—	—	—	—	—	—	68.5	73.8	79	84.3

Port Size 01

n: Stations	2	3	4	5	6	7	8	9	10	11	12
L1	76	88.5	101	113.5	126	138.5	151	163.5	176	188.5	201
L2	68	80.5	93	105.5	118	130.5	143	155.5	168	180.5	193
L3	—	—	—	—	—	—	—	77.8	84	90.3	96.5

Plug-in Metal Base | Type 51/Bottom Ported | EX510

Dimensions: SY5000 Series

SS5Y5-51S5- Stations **D** - 01, 02 C□, N□ KC□, KN□ □

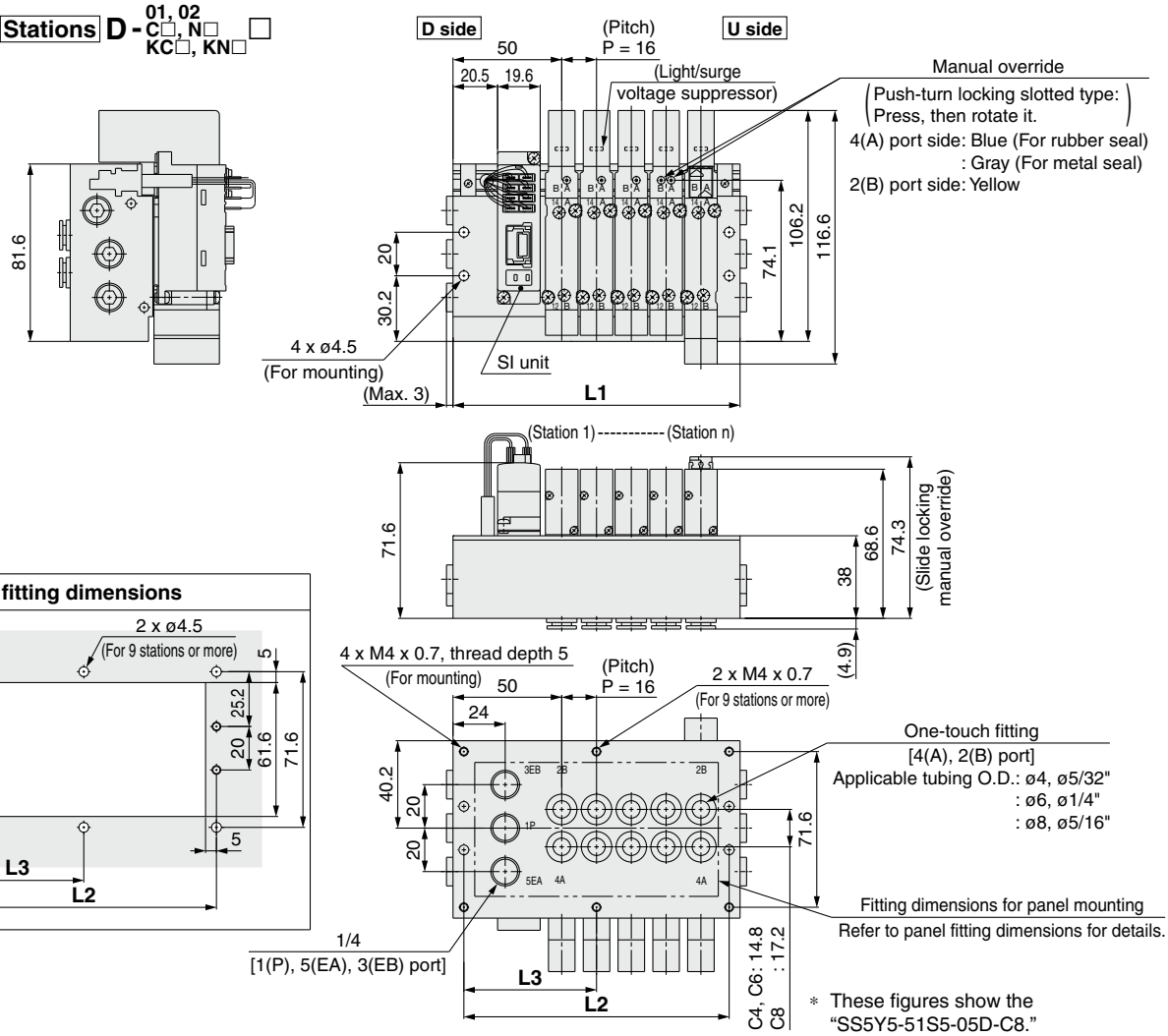

Panel fitting dimensions

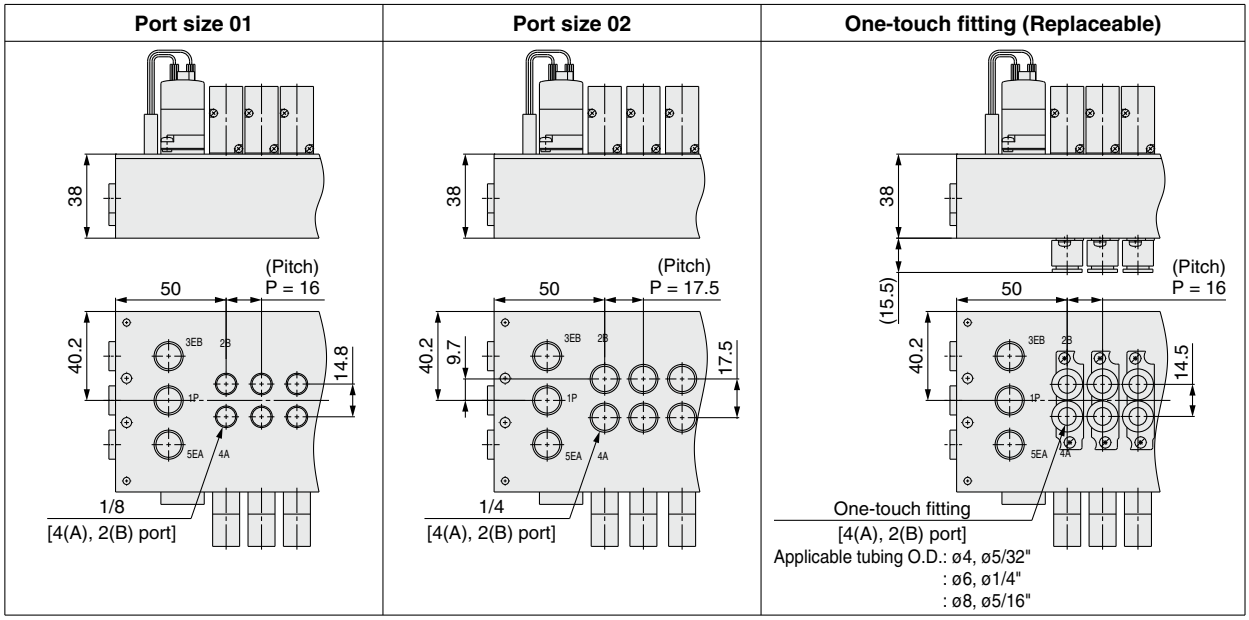

Port Sizes 01, C□, N□, KC□, KN□

n: Stations	2	3	4	5	6	7	8	9	10	11	12
L1	84	100	116	132	148	164	180	196	212	228	244
L2	74	90	106	122	138	154	170	186	202	218	234
L3	—	—	—	—	—	—	—	93	101	109	117

Port Size 02

n: Stations	2	3	4	5	6	7	8	9	10	11	12
L1	88.5	106	123.5	141	158.5	176	193.5	211	228.5	246	263.5
L2	78.5	96	113.5	131	148.5	166	183.5	201	218.5	236	253.5
L3	—	—	—	—	—	—	—	100.5	109.3	118	126.8

Plug-in Metal Base | Type 51/Bottom Ported | EX510

Dimensions: SY7000 Series

SS5Y7-51S5□-Stations D-02 C□, N□ KC□, KN□ □(D)

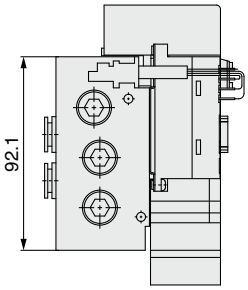

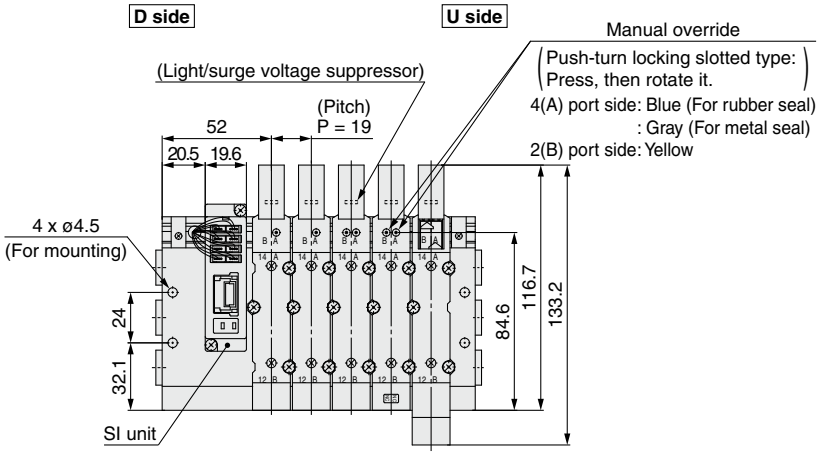

Port size 02	One-touch fitting (Replaceable)

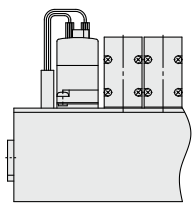

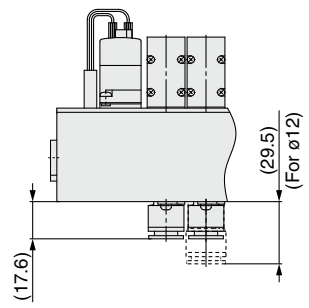

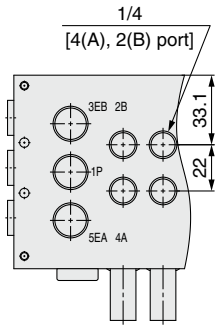

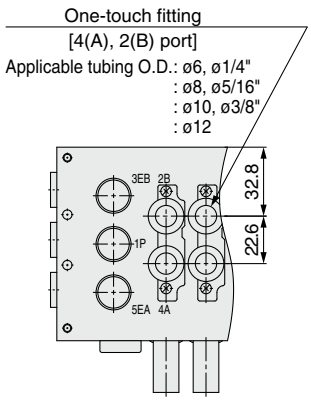

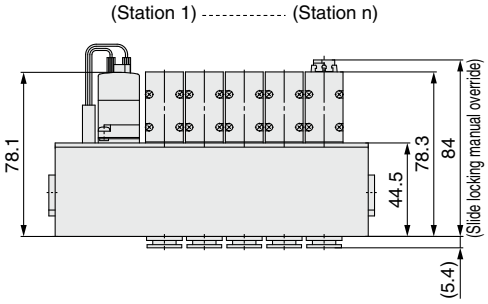

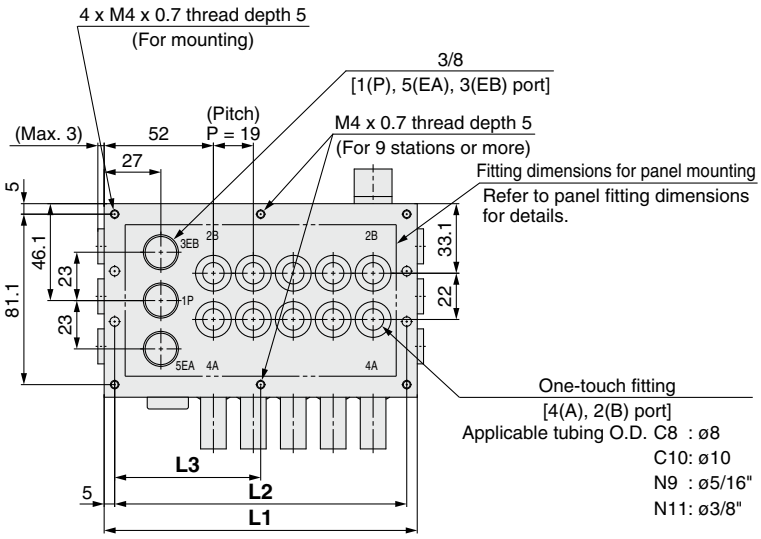

Panel fitting dimensions

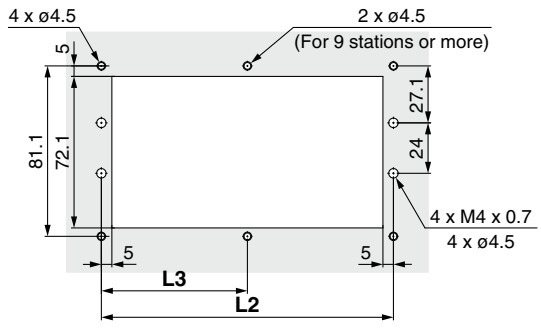

∗ These figures show the "SS5Y7-51S5-05D-C10."

n: Stations	2	3	4	5	6	7	8	9	10	11	12
L1	92	111	130	149	168	187	206	225	244	263	282
L2	82	101	120	139	158	177	196	215	234	253	272
L3	—	—	—	—	—	—	—	107.5	117	126.5	136

Type 52
Top Ported

Plug-in Metal Base EX510

SY3000/5000/7000 Series

How to Order Manifolds

SS5Y 3 – 52 S5 ❶ – ❹ ❺ ❻ ❼ ❽

❶ Series

3	SY3000
5	SY5000
7	SY7000

❷ Type

52	Top ported
52R	Top ported, External pilot

❸ SI unit output polarity

Nil	Positive common
N	Negative common

❹ Wiring type

Nil	All double wiring*1
S	All single wiring*2

*1 All double wiring: 2-position single, double, 3-position, and 4-position valves can be used on all manifold stations.

*2 All single wiring: Available only for the manifold which has 2-position single for all stations Note that 2-position double, 3-, or 4-position valves cannot be used.

* If a mix of single and double wiring is required, it is supplied as a special order.

❺ Valve stations

Symbol	Stations	Note
02	2 stations	All double wiring
⋮	⋮	
08	8 stations	
02	2 stations	All single wiring
⋮	⋮	
12	12 stations	

* This also includes the number of the blanking plate assembly.

❻ P, E port entry

U	U side*1
D	D side*1
B	Both sides

*1 Plugs are mounted on the opposite side of the selected ports.

❼ Thread type

Nil	Rc
00F	G
00N	NPT
00T	NPTF

❽ Mounting

Nil	Direct mounting	
D	DIN rail mounting (With DIN rail)	
D0	DIN rail mounting (Without DIN rail)	
D3	For 3 stations	Specify a length longer than that of the standard rail.
⋮	⋮	
D12	For 12 stations	

* Refer to page 295 for the fixation of DIN rail mounting type manifold.

How to Order Manifold Assembly

Example (SS5Y3-52S5-□)

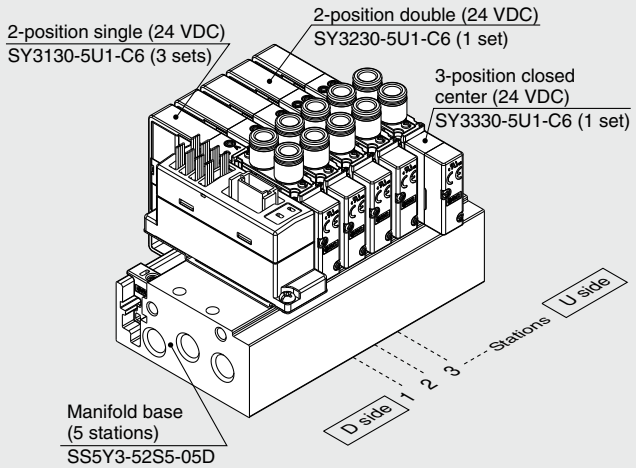

SS5Y3-52S5-05D ····· 1 set (Type 52 5-station manifold base part no.)
***SY3130-5U1-C6 ····· 3 sets (2-position single part no.)**
***SY3230-5U1-C6 ····· 1 set (2-position double part no.)**
***SY3330-5U1-C6 ····· 1 set (3-position closed center part no.)**
→ The asterisk denotes the symbol for the assembly. Prefix it to the part numbers of the valve, etc.

- For the valve arrangement, the valve closest to the D side is considered the 1st station.
- Under the manifold part number, state the valves to be mounted in order starting with the 1st station as shown in the figure above. If the arrangement becomes too complicated, specify the details on a manifold specification sheet.

For details on the EX510 Gateway Type Serial Transmission System, refer to the **Web Catalog** and the Operation Manual. Please download the Operation Manual via the SMC website, https://www.smcworld.com

How to Order Valves (With mounting screw)

Refer to page 15 for valve specifications.

SY 3 1 3 0 □ □ □ □ – 5 □ □ 1 – C6 □ – □

❶ ❷ ❸ ❹ ❺ ❻ ❼ ❽ ❾ ❿ ⓫ ⓬ ⓭

Top ported

❶ Series

3	SY3000
5	SY5000
7	SY7000

❷ Type of actuation

1	2-position	Single
2		Double
3	3-position	Closed center
4		Exhaust center
5		Pressure center
A*1	4-position dual 3-port	N.C./N.C.
B*1		N.O./N.O.
C*1		N.C./N.O.

*1 Only the rubber seal type is available for the 4-position dual 3-port valve.

❸ Seal type

0	Rubber seal
1	Metal seal

❹ Pilot type

Nil	Internal pilot
R	External pilot

❺ Back pressure check valve (Built-in valve type)

Nil	None
H	Built-in

* Only the rubber seal type is available.
* The back pressure check valve is not available for the 3-position type or the SY7000.

❻ Pilot valve option

Nil	Standard (0.7 MPa)
B	Quick response type (0.7 MPa)
K*1	High pressure type (1.0 MPa)

*1 Only the metal seal type is available for the high pressure type.

❼ Coil type

Nil	Standard
T	With power saving circuit (Continuous duty type)

* Be sure to select the power saving circuit type if the valve is to be continuously energized for long periods of time.
* Be careful of the energizing time when the power saving circuit is selected. Refer to page 292 for details.

❽ Rated voltage

5	24 VDC

❾ Light/surge voltage suppressor and common specification

Symbol	With light	Surge voltage suppressor	Common specification
R	—	●	Non-polar
U	●		
S	—		Positive common
Z	●		
NS	—		Negative common
NZ	●		

* Only "Z" and "NZ" types are available with a power saving circuit. Select "R," "U," "S," or "Z" for the valve when the SI unit output polarity is Nil (positive common). Select "R," "U," "NS," or "NZ" for the valve when the SI unit output polarity is N (negative common).

❿ Manual override

Nil: Non-locking push type

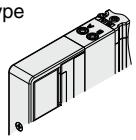

D: Push-turn locking slotted type

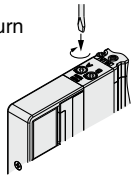

E: Push-turn locking lever type

F: Slide locking type

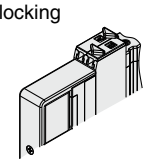

* Refer to page 34 for the safety slide locking manual override.

⓫ A, B port size

Thread piping

Symbol	Port size	Applicable series
M5	M5 x 0.8	SY3000
01	1/8	SY5000
02	1/4	SY7000

One-touch fitting (Metric)

Symbol	A, B port	SY3000	SY5000	SY7000
C2	ø2	●	—	—
C3	ø3.2	●	—	—
C4	ø4	●	●	—
C6	ø6	●	●	●
C8	ø8	—	●	●
C10	ø10	—	—	●
C12	ø12	—	—	●

One-touch fitting (Inch)

Symbol	A, B port	SY3000	SY5000	SY7000
N1	ø1/8"	●	—	—
N3	ø5/32"	●	●	—
N7	ø1/4"	●	●	●
N9	ø5/16"	—	●	●
N11	ø3/8"	—	—	●

⓬ Thread type

Nil	Rc
F	G
N	NPT
T	NPTF

* Only Nil is available for M5.

⓭ Type of mounting screw

Nil	Round head combination screw
B	Hexagon socket head cap screw
K	Round head combination screw (Drop prevention type)
H	Hexagon socket head cap screw (Drop prevention type)

* For "K" and "H," the valve body cover has a drop prevention construction to stop the mounting screws from falling out when the valve is removed for maintenance, etc.
* **When ordering a valve individually, the base gasket is not included.**
  Since the base gasket is attached to the manifold, please order the base gasket separately if it is needed for maintenance. Refer to page 266 for base gasket and mounting screw part numbers.
* "B" and "H" cannot be selected for the individual SUP/EXH spacer assembly or interface regulator.

⚠ Protective class class Ⅲ (Mark: ⧫)

Plug-in Metal Base | Type 52/Top Ported | EX510

Dimensions: SY3000 Series

SS5Y3-52(R)S5□-Stations U/D/B-□(D)

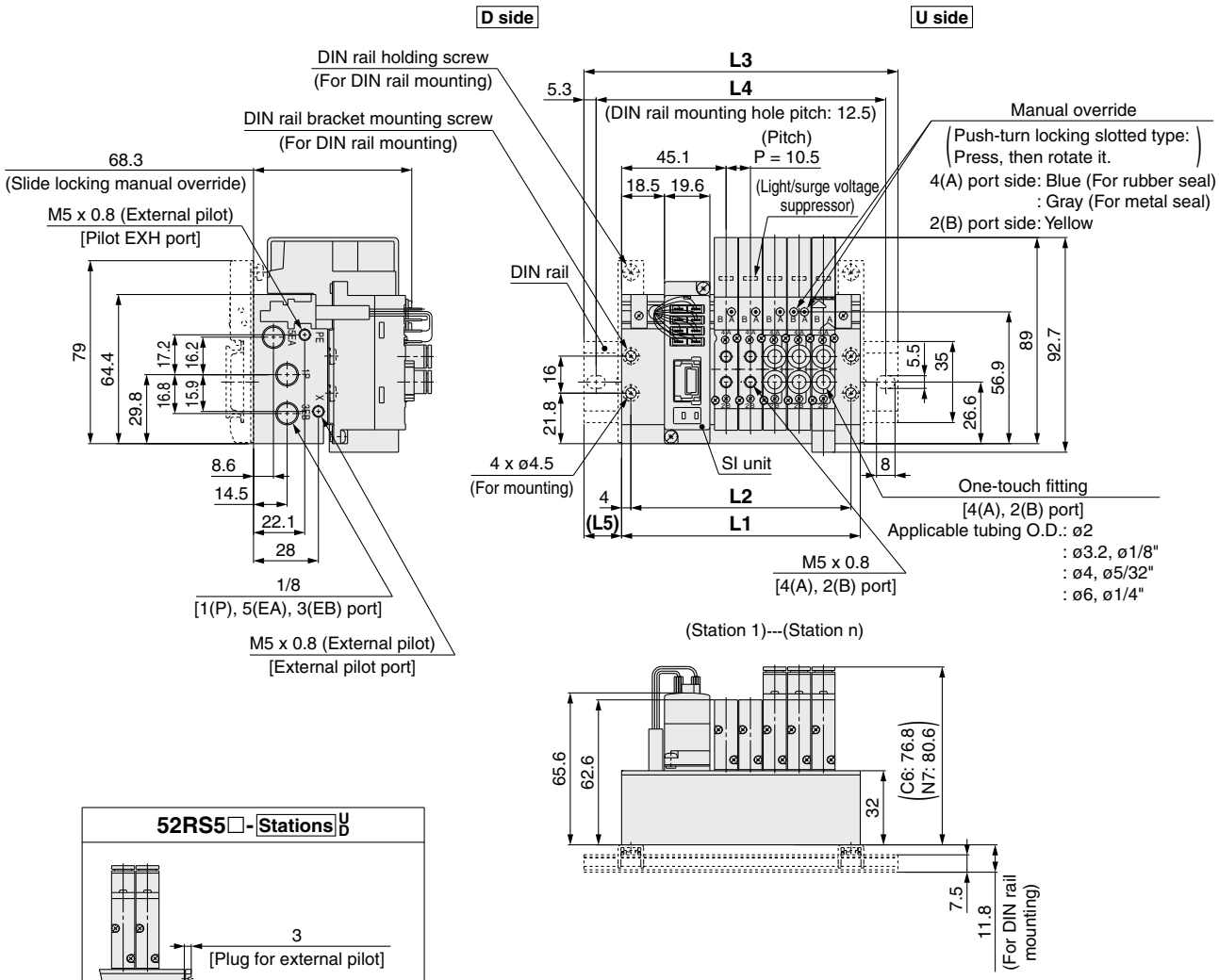

∗ These figures show the "SS5Y3-52S5-05B."

52RS5□-Stations U/D

∗ The drawing above shows when P, E port entry is D.

n: Stations	2	3	4	5	6	7	8	9	10	11	12
L1	71.5	82	92.5	103	113.5	124	134.5	145	155.5	166	176.5
L2	63.5	74	84.5	95	105.5	116	126.5	137	147.5	158	168.5
L3	98	110.5	123	135.5	148	160.5	160.5	173	185.5	198	210.5
L4	87.5	100	112.5	125	137.5	150	150	162.5	175	187.5	200
L5	13.5	14.5	15.5	16.5	17.5	18.5	13	14	15	16	17

Dimensions: SY5000 Series

SS5Y5-52(R)S5□-Stations U/D/B-□(D)

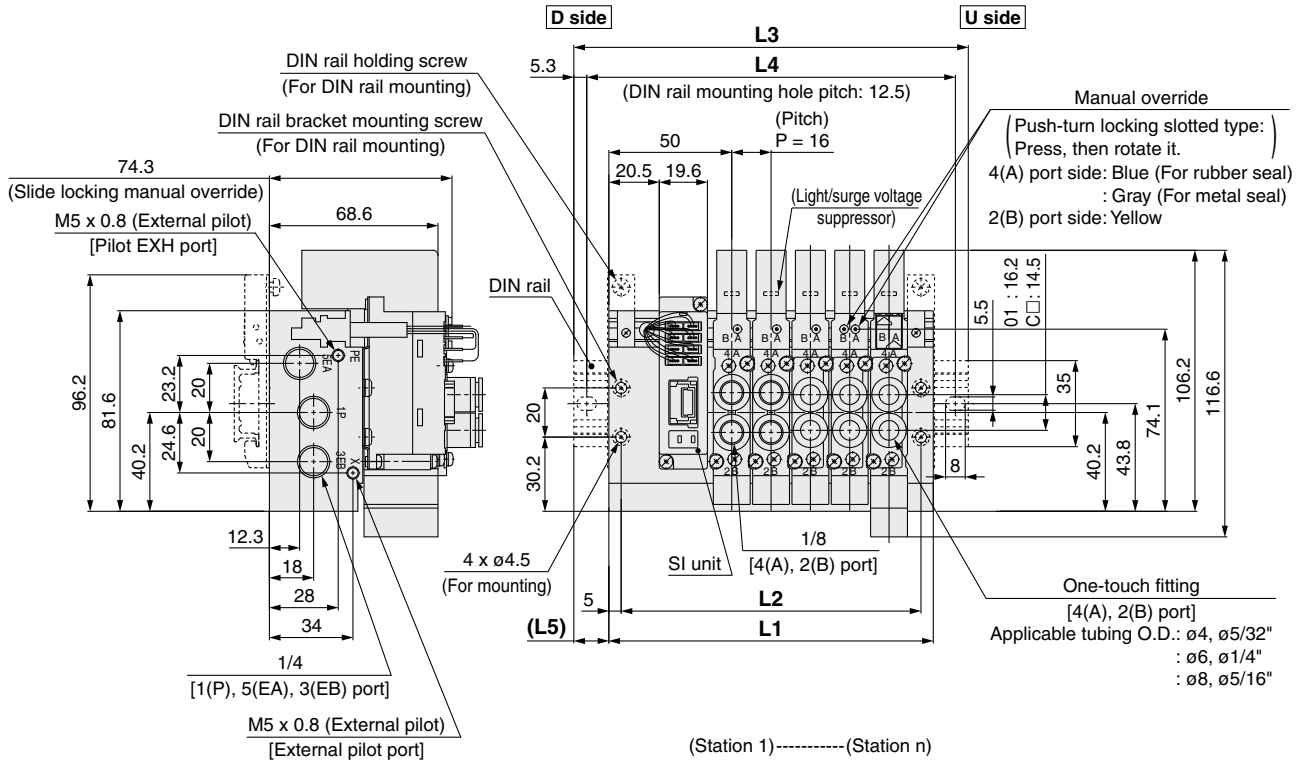

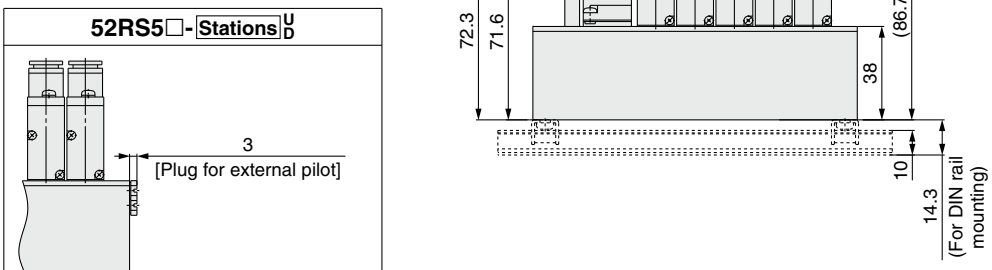

52RS5□-Stations U/D

∗ The drawing above shows when P, E port entry is D.

∗ These figures show the "SS5Y5-52S5-05B."

n: Stations	2	3	4	5	6	7	8	9	10	11	12
L1	84	100	116	132	148	164	180	196	212	228	244
L2	74	90	106	122	138	154	170	186	202	218	234
L3	110.5	135.5	148	160.5	173	198	210.5	223	248	260.5	273
L4	100	125	137.5	150	162.5	187.5	200	212.5	237.5	250	262.5
L5	13.5	18	16	14.5	12.5	17	15.5	13.5	18	16.5	14.5

Plug-in Metal Base | Type 52/Top Ported | EX510

Dimensions: SY7000 Series

SS5Y7-52(R)S5□-[Stations][U/D/B]-□(D)

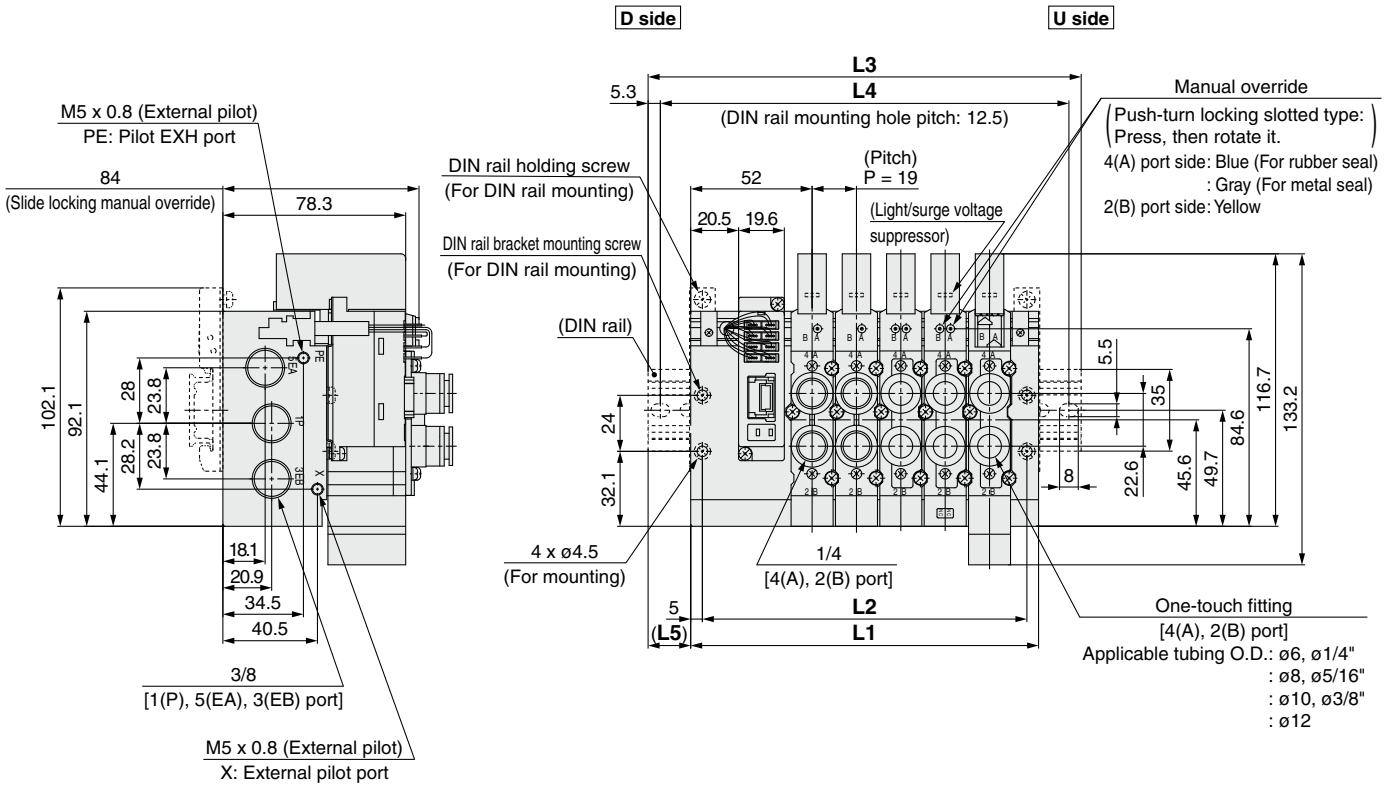

52RS5□-[Stations][U/D]

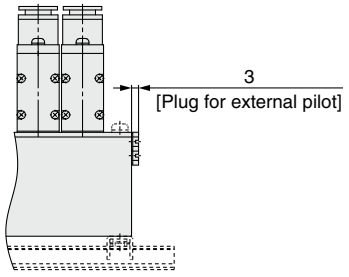

∗ The drawing above shows when P, E port entry is D.

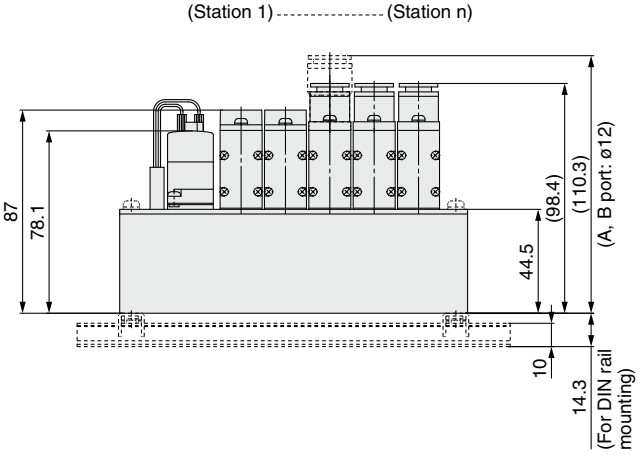

∗ These figures show the "SS5Y7-52S5-05B."

n: Stations	2	3	4	5	6	7	8	9	10	11	12
L1	92	111	130	149	168	187	206	225	244	263	282
L2	82	101	120	139	158	177	196	215	234	253	272
L3	123	148	160.5	185.5	198	223	235.5	260.5	273	298	310.5
L4	112.5	137.5	150	175	187.5	212.5	225	250	262.5	287.5	300
L5	15.5	18.5	15.5	18.5	15	18	15	18	14.5	17.5	14.5

Plug-in Metal Base Manifold Exploded View

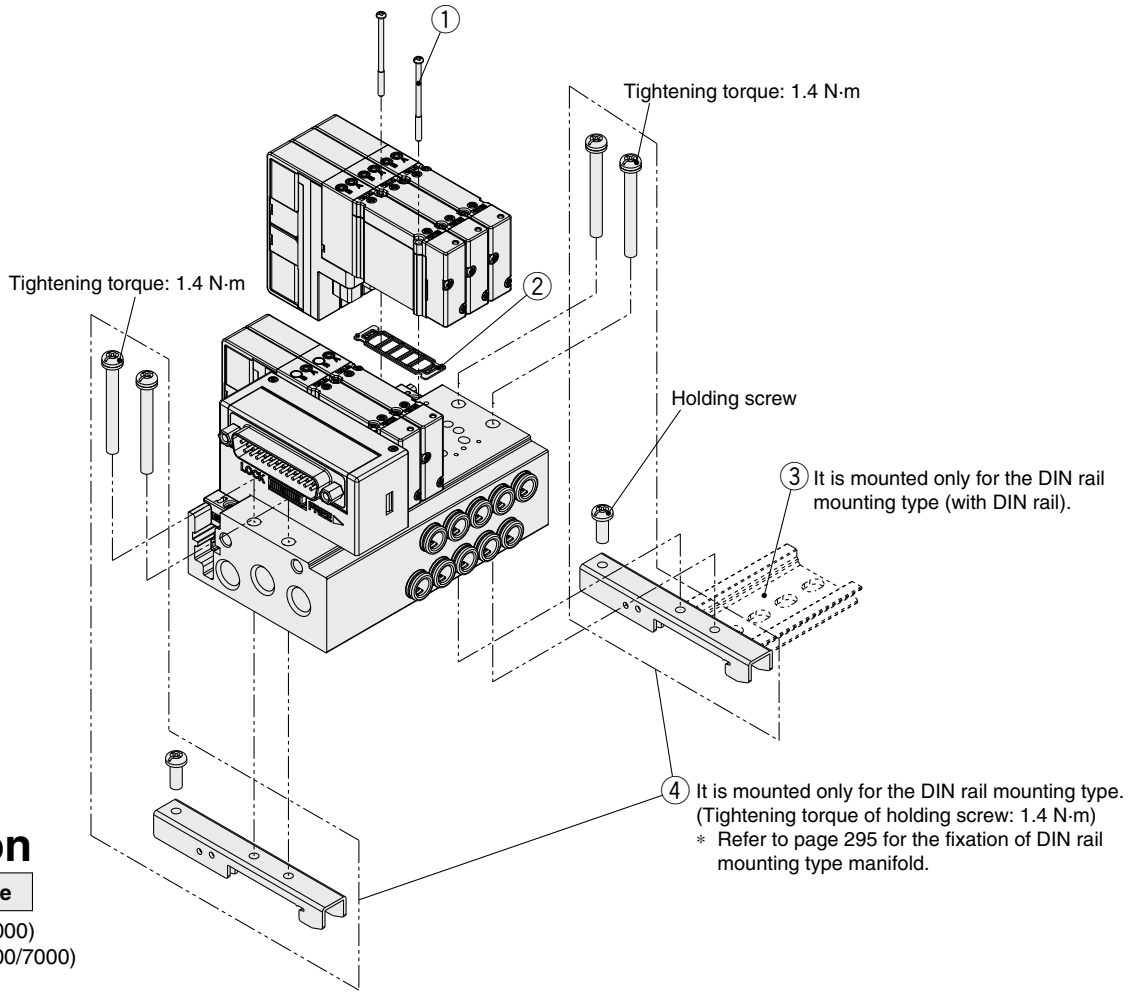

⚠ Caution

Tightening torque

M2: 0.16 N·m (SY3000)
M3: 0.8 N·m (SY5000/7000)

Manifold Parts Nos.

No.	Description		Part no. SY3000	Part no. SY5000	Part no. SY7000	Note
①	Valve mounting screw	Round head combination screw	**SY3000-23-24A** (M2 x 32)	**SY5000-221-1A** (M3 x 32.5)	**SY7000-221-1A** (M3 x 36.5)	Part numbers shown on the left are for 10 valves (20 pcs.). (30 pcs. for the SY7000)
		Hexagon socket head cap screw	**SY3000-222-1A** (M2 x 32)	**SY5000-222-1A** (M3 x 32.5)	**SY7000-222-1A** (M3 x 36.5)	
②	Base gasket (for plug-in metal base and sub-plate)		**SY30M-11-1A**	**SY50M-11-1A**	**SY70M-11-1A**	Part numbers shown on the left are for 10 valves (10 pcs.).
③	DIN rail		**VZ1000-11-1-□**	**VZ1000-11-4-□**	**VZ1000-11-4-□**	Refer to page 268.
④	Clamp bracket assembly (for plug-in metal base)		**SY30M-15-2A**	**SY50M-15-2A**	**SY70M-15-2A**	Part numbers shown on the left are for the clamp bracket assembly for one manifold (two sets of clamp brackets).

SY3000/5000/7000 Series
One-touch Fitting, Plug Assembly Part Nos.

Refer to “How to Replace One-touch Fittings” on page 296 for the replacement method.

■ One-touch fittings

Port size				SY3000	SY5000	SY7000
A, B port	Metric size	ø2	Straight type	VVQ1000-50A-C2	—	—
		ø3.2		VVQ1000-50A-C3	—	—
		ø4		VVQ1000-50A-C4	VVQ1000-51A-C4	—
		ø6		VVQ1000-50A-C6	VVQ1000-51A-C6	VVQ2000-51A-C6
		ø8		—	VVQ1000-51A-C8	VVQ2000-51A-C8
		ø10		—	—	VVQ2000-51A-C10
		ø12		—	—	KQ2H12-17-X224
	Inch size	ø1/8"	Straight type	VVQ1000-50A-N1	—	—
		ø5/32"		VVQ1000-50A-N3	VVQ1000-51A-N3	—
		ø1/4"		VVQ1000-50A-N7	VVQ1000-51A-N7	VVQ2000-51A-N7
		ø5/16"		—	VVQ1000-51A-N9	VVQ2000-51A-N9
		ø3/8"		—	—	VVQ2000-51A-N11

∗ Purchasing order is available in units of 10 pieces.

■ Plug assembly

	SY3000	SY5000	SY7000
A, B port	VVQ0000-58A	VVQ1000-58A	VVQ2000-58A

∗ Purchasing order is available in units of 10 pieces.

SY3000/5000/7000 Series
Manifold Options

■ For the SY3000 Plug-in metal base

VZ1000-11-1-□

* After confirming the L3 dimension in the dimensions table of each series, refer to the DIN rail dimensions table below and specify the number in the box □.

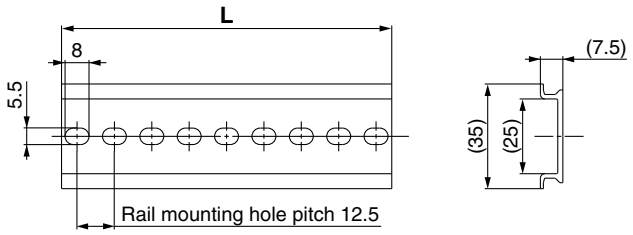

No.	0	1	2	3	4	5	6	7	8	9	10	11	12	13	14	15	16	17	18
L dimension	98	110.5	123	135.5	148	160.5	173	185.5	198	210.5	223	235.5	248	260.5	273	285.5	298	310.5	323
Weight [g]	17.6	19.9	22.1	24.4	26.6	28.9	31.1	33.4	35.6	37.9	40.1	42.4	44.6	46.9	49.1	51.4	53.6	55.9	58.1

No.	19	20	21	22	23	24	25	26	27	28	29	30	31	32	33	34	35	36	37
L dimension	335.5	348	360.5	373	385.5	398	410.5	423	435.5	448	460.5	473	485.5	498	510.5	523	535.5	548	560.5
Weight [g]	60.4	62.5	64.9	67.1	69.4	71.6	73.9	76.1	78.4	80.6	82.9	85.1	87.4	89.6	91.9	94.1	96.4	98.6	100.9

No.	38	39	40	41	42	43	44	45	46	47	48	49	50	51	52	53	54	55	56
L dimension	573	585.5	598	610.5	623	635.5	648	660.5	673	685.5	698	710.5	723	735.5	748	760.5	773	785.5	798
Weight [g]	103.1	105.4	107.6	109.9	112.1	114.4	116.6	118.9	121.1	123.4	125.6	127.9	130.1	132.4	134.6	136.9	139.1	141.4	143.6

No.	57	58	59	60	61	62	63	64	65	66	67	68	69	70	71
L dimension	810.5	823	835.5	848	860.5	873	885.5	898	910.5	923	935.5	948	960.5	973	985.5
Weight [g]	145.9	148.1	150.4	152.6	154.9	157.1	159.4	161.6	163.9	166.1	168.4	170.6	172.9	175.1	177.4

■ For the SY5000/7000 Plug-in metal base

VZ1000-11-4-□

* After confirming the L3 dimension in the dimensions table of each series, refer to the DIN rail dimensions table below and specify the number in the box □.

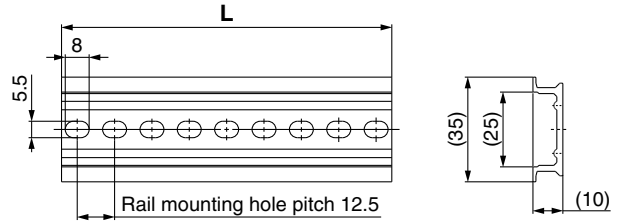

No.	0	1	2	3	4	5	6	7	8	9	10	11	12	13	14	15	16	17	18
L dimension	98	110.5	123	135.5	148	160.5	173	185.5	198	210.5	223	235.5	248	260.5	273	285.5	298	310.5	323
Weight [g]	24.8	28	31.1	34.3	37.4	40.6	43.8	46.9	50.1	53.3	56.4	59.6	62.7	65.9	69.1	72.2	75.4	78.6	81.7

No.	19	20	21	22	23	24	25	26	27	28	29	30	31	32	33	34	35	36	37
L dimension	335.5	348	360.5	373	385.5	398	410.5	423	435.5	448	460.5	473	485.5	498	510.5	523	535.5	548	560.5
Weight [g]	84.9	88	91.2	94.4	97.5	100.7	103.9	107	110.2	113.3	116.5	119.7	122.8	126	129.2	132.3	135.5	138.6	141.8

No.	38	39	40	41	42	43	44	45	46	47	48	49	50	51	52	53	54	55	56
L dimension	573	585.5	598	610.5	623	635.5	648	660.5	673	685.5	698	710.5	723	735.5	748	760.5	773	785.5	798
Weight [g]	145	148.1	151.3	154.5	157.6	160.8	163.9	167.1	170.3	173.4	176.6	179.8	182.9	186.1	189.2	192.4	195.6	198.7	201.9

No.	57	58	59	60	61	62	63	64	65	66	67	68	69	70	71
L dimension	810.5	823	835.5	848	860.5	873	885.5	898	910.5	923	935.5	948	960.5	973	985.5
Weight [g]	205.1	208.2	211.4	214.5	217.7	220.9	224	227.2	230.4	233.5	236.7	239.8	243	246.2	249.3

Manifold Options

■ Blanking plate assembly (With mounting screw)

Used when valve additions are expected or for maintenance
A structure is in place on the blanking plate to prevent the mounting screws from sliding.

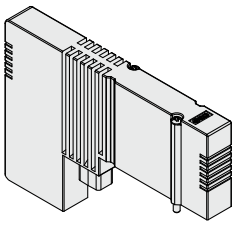

SY30M-26-2A (-B)

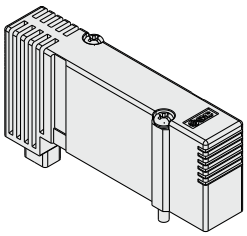

SY50M-26-2A (-B)

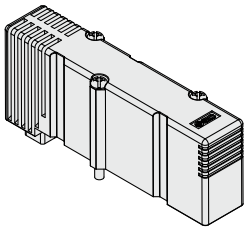

SY70M-26-2A (-B)

Refer to pages 276 to 278 for dimensions.

Refer to pages 270 to 275 for individual SUP/EXH and other options.

Part numbers of mounting screw [Hexagon bolt] (For repairs)
SY3000: SY3000-23-24A [SY3000-222-1A]
SY5000: SY5000-221-1A [SY5000-222-1A]
SY7000: SY7000-221-2A [SY7000-222-1A]

How to Order Blanking Plate Assembly

SY□0M−26−2A−□

Series

3	SY3000
5	SY5000
7	SY7000

Option for mounting

Nil	With mounting screw (Round head combination screw)
B	With mounting screw (Hexagon socket head cap screw)

Base type

2	For plug-in metal base

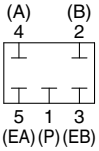

Circuit diagram

■ Plug

These are inserted in unused cylinder ports and P, E ports.

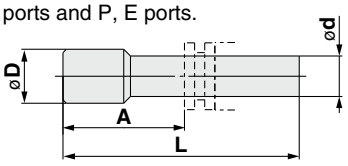

∗ Shipped together with the product

Dimensions

Applicable fitting size ød (Metric size)	Model	A	L	øD
2	**KJP-02**	8.2	17	3
3.2	**KQ2P-23**	16	31.5	5
4	**KQ2P-04**	16	32	6
6	**KQ2P-06**	18	35	8
8	**KQ2P-08**	20.5	39	10
10	**KQ2P-10**	22	43	12
12	**KQ2P-12**	24	45.5	14

Applicable fitting size ød (Inch size)	Model	A	L	øD
1/8"	**KQ2P-01**	16	31.5	5
5/32"	**KQ2P-03**	16	32	6
1/4"	**KQ2P-07**	18	35	8.5
5/16"	**KQ2P-09**	20.5	39	10
3/8"	**KQ2P-11**	22	43	11.5

⚠Caution

Tightening torque for mounting screw
M2: 0.16 N·m (SY3000)
M3: 0.8 N·m (SY5000/7000)

Manifold Options

* Refer to pages 276 to 278 for dimensions.

■ Individual SUP spacer assembly

[With a connector gasket, a base gasket, and two mounting screws (3 pcs. for the SY7000)]

When the same manifold is used for different pressures, an individual SUP spacer assembly is used as a supply port for different pressures.

* When selecting a One-touch fitting elbow type for a spacer assembly, use it faced upward, since it interferes with A and B port piping of Type 50 manifolds.

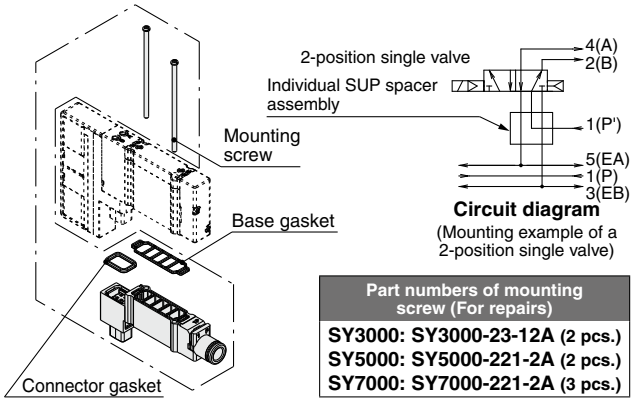

Circuit diagram
(Mounting example of a 2-position single valve)

Part numbers of mounting screw (For repairs)
SY3000: SY3000-23-12A (2 pcs.)
SY5000: SY5000-221-2A (2 pcs.)
SY7000: SY7000-221-2A (3 pcs.)

■ Individual EXH spacer assembly

[With a connector gasket, a base gasket, and two mounting screws (3 pcs. for the SY7000)]

When valve exhaust affects other stations due to the circuit configuration, this spacer assembly is used for individual valve exhaust.

* When selecting a One-touch fitting elbow type for a spacer assembly, use it faced upward, since it interferes with A and B port piping of Type 50 manifolds.

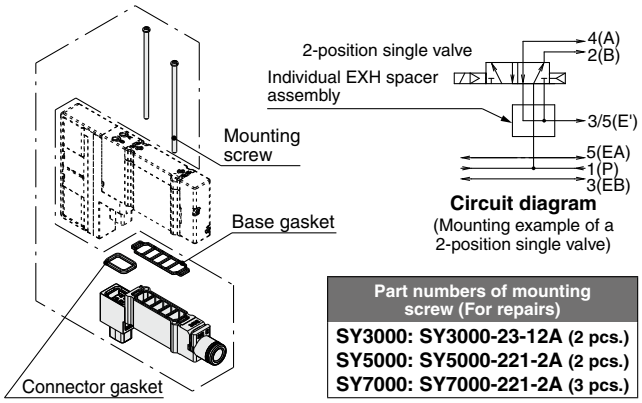

Circuit diagram
(Mounting example of a 2-position single valve)

Part numbers of mounting screw (For repairs)
SY3000: SY3000-23-12A (2 pcs.)
SY5000: SY5000-221-2A (2 pcs.)
SY7000: SY7000-221-2A (3 pcs.)

How to Order Individual SUP/EXH Spacer Assembly

One-touch fitting Straight type SY **3** 0M – **38** – 1 A – **C6**

One-touch fitting Elbow type SY **3** 0M – **38** – **2** A – **L6**

Series

3	SY3000
5	SY5000
7	SY7000

Spacer type

38	Individual SUP spacer
39	Individual EXH spacer

Individual SUP/EXH spacer assembly

2	Short elbow type
3	Long elbow type

* Select the long elbow type for a 3-position valve.

Port size (Metric/One-touch fittings)

Symbol	P, E port	SY3000	SY5000	SY7000
L4	ø4	●	●	—
L6	ø6	●	●	●
L8	ø8	—	●	●
L10	ø10	—	—	●
L12	ø12	—	—	●

Port size (Inch/One-touch fittings)

Symbol	P, E port	SY3000	SY5000	SY7000
LN3	ø5/32"	●	—	—
LN7	ø1/4"	●	●	—
LN9	ø5/16"	—	●	—
LN11	ø3/8"	—	—	●

Port size (Metric/One-touch fittings)

Symbol	P, E port	SY3000	SY5000	SY7000
C2	ø2	●	—	—
C3	ø3.2	●	—	—
C4	ø4	●	●	—
C6	ø6	●	●	●
C8	ø8	—	●	●
C10	ø10	—	—	●
C12	ø12	—	—	●

Port size (Inch/One-touch fittings)

Symbol	P, E port	SY3000	SY5000	SY7000
N1	ø1/8"	●	—	—
N3	ø5/32"	●	●	—
N7	ø1/4"	●	●	●
N9	ø5/16"	—	●	●
N11	ø3/8"	—	—	●

* When using in combination with the SY$^{5}_{7}$30$^{0}_{1}$□-□1-E (With residual pressure release valve), the length of the required mounting screws will differ. Please contact SMC for details.

⚠ Caution

Tightening torque for mounting screw
M2: 0.16 N·m (SY3000)
M3: 0.8 N·m (SY5000/7000)

Manifold Options

∗ Refer to pages 276 to 278 for dimensions.

■ SUP stop valve spacer assembly with residual pressure release valve

[With a connector gasket, a base gasket, and two mounting screws (3 pcs. for the SY7000)]

It is used to shut off the supply air to valves individually.

SY 3 0M − 50 − 1A E

Series

3	SY3000
5	SY5000
7	SY7000

Manual override

Nil	Push-turn locking slotted type
E	Push-turn locking lever type

2-position single valve

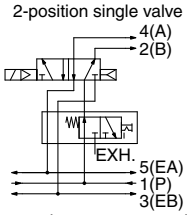

SUP stop valve spacer assembly with residual pressure release valve

Circuit diagram

(Mounting example of a 2-position single valve)

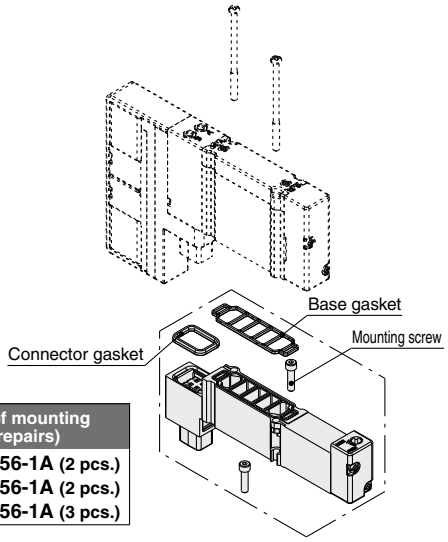

Part numbers of mounting screw (For repairs)
SY3000: SY30M-56-1A (2 pcs.)
SY5000: SY50M-56-1A (2 pcs.)
SY7000: SY70M-56-1A (3 pcs.)

∗ For lever type
When locking the lever type manual override, push the lever down in the PUSH position with your fingers until it stops, then turn the lever 90° clockwise. (PUSH → LOCK)
Turning the lever without pushing it down until it stops can cause damage to the manual override and other problems such as air leakages.
To unlock the manual override, turn the lever counterclockwise. (LOCK → PUSH)

[How to mount SUP stop valve spacer assembly with residual pressure release valve]

Insert the SUP stop valve mounting screw from the side of the spacer assembly, and mount it to the manifold.
Tighten the SUP stop valve mounting screw to the specified tightening torque.
Mount the valve and tighten the valve mounting screws to the specified tightening torque after mounting the SUP stop valve spacer assembly with residual pressure exhaust valve.

∗ Install the plate type nut to the spacer assembly as shown in the figure if it comes off. The SUP stop valve mounting screws can be tightened with a hexagon wrench without removing the plate type nut.
∗ This product is only for internal pilot specifications, as the external pilot air cannot be shut off.
∗ If the product is equipped with a 3-position closed center, residual pressure cannot be released, so use in combination with a 3-port valve, which can be connected to the A, B piping port.

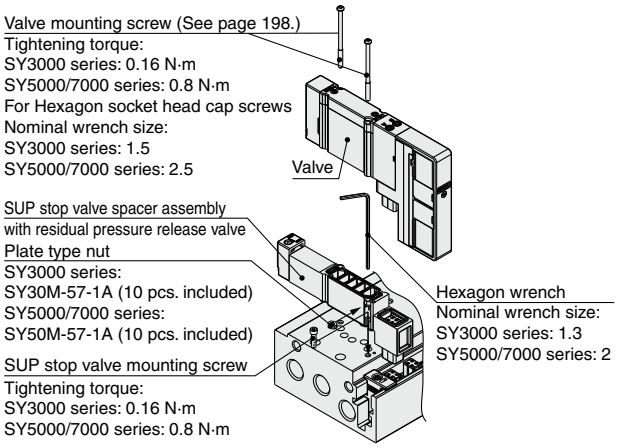

⚠Caution

Tightening torque for mounting screw
M2: 0.16 N·m (SY3000)
M3: 0.8 N·m (SY5000/7000)

Manifold Options

∗ Refer to pages 276 to 278 for dimensions.

■ Double check spacer assembly with residual pressure release valve (Side/Bottom ported)

[With a connector gasket, a base gasket, and two mounting screws (3 pcs. for the SY7000)]
It is used to hold the intermediate position of the cylinder for a long period of time. Use a 3-position exhaust center valve when the double check spacer assembly with residual exhaust valve is used.
It can also be used for drop prevention at the cylinder stroke end when supply residual pressure is released by using a 2-position single/double valve.

Series	Part no.
SY3000	SY30M-60-1A
SY5000	SY50M-60-1A
SY7000	SY70M-60-1A

	Intermediate stop	Drop prevention
Applicable valve	SY$^{3}_{5}_{7}$40$^{0}_{1}$	SY$^{3}_{5}_{7}$$^{1}_{2}0^{0}_{1}$

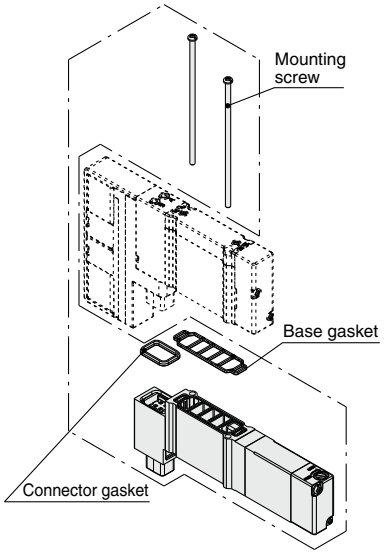

Part numbers of mounting screw (For repairs)
SY3000: SY3000-23-27A (2 pcs.)
SY5000: SY5000-221-4A (2 pcs.)
SY7000: SY7000-221-4A (3 pcs.)

<Example>

Double check spacer assembly with residual pressure release valve
3-position exhaust center valve

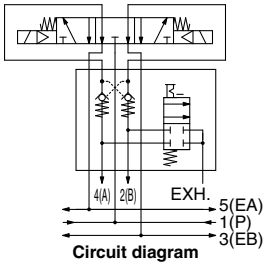

Circuit diagram
(Intermediate stop: When 3-position exhaust center valve is mounted)

Double check spacer assembly with residual pressure release valve
2-position single valve

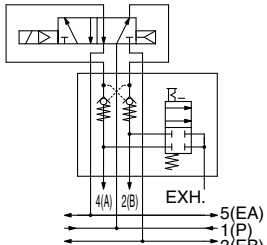

Circuit diagram
(Drop prevention: When 2-position single valve is mounted)

⚠Caution

- Air leakage from the pipe between the valve and cylinder or from the fittings will prevent the cylinder from stopping for a long period of time. Check the leakage using neutral household detergent, such as dish washing soap. Also, check the cylinder's tube gasket, piston seal, and rod seal for air leakage.
- Combining with 3-position closed center or pressure center valve will not work.
- If the exhaust of the double check spacer is restricted too much, the cylinder may not operate properly and may not stop intermediately.
- Set the cylinder load so that the cylinder pressure will be within two times that of the supply pressure.
- If using a double check spacer that is built in to the sub-plate, refer to page 283.

Specifications

Max. operating pressure		1.0 MPa
Min. operating pressure		0.1 MPa
Ambient and fluid temperatures		−10 to 50°C
Flow rate characteristics: C	**SY3000**	0.3 dm³/(s·bar)
	SY5000	0.7 dm³/(s·bar)
	SY7000	1.1 dm³/(s·bar)
Max. operating frequency		3 Hz

⚠ Caution

Tightening torque for mounting screw
M2: 0.16 N·m (SY3000)
M3: 0.8 N·m (SY5000/7000)

Manifold Options

∗ Refer to pages 276 to 278 for dimensions.

■ Interface regulator

[With a connector gasket, a base gasket, and two mounting screws (3 pcs. for the SY7000)]

Used when the supply pressure for each valve on the same manifold must be individually set (reduced pressure)

How to Order

SY 3 0M − 05 − P − □

Series

3	SY3000

Pressure gauge option∗1

M1	Without pressure gauge
05	Pressure gauge with MPa display (For odd number station)
06	Pressure gauge with MPa display (For even number station)
N5	Pressure gauge with psi display (For odd number station)∗2
N6	Pressure gauge with psi display (For even number station)∗2

Applicable valve∗3

Nil	For single, double, and 4-position
3	For 3-position

∗1 In the case of the SY3000 series with a pressure gauge, when mounting on the manifold, use caution that the part numbers are different between the odd no. stations and the even no. stations to prevent the pressure gauges from interfering with each other.

∗2 As per the new Measurement Law, gauges with a psi display will only be sold to overseas customers.

∗3 In the case of the SY3000 series, use caution that the part numbers will differ depending on the one for single/double and 4- and 3-position due to the different length of solenoid valves. Also, if you have selected a model with a pressure gauge, and if at least the one for 3-position is included in the same manifold, use all the ones for 3-position to prevent the pressure gauges from interfering with each other.

SY 5 0M − 00 − P

Series

5	SY5000
7	SY7000

Regulating port

P	1(P) port
A1	4(A) port (P controlled type, A port regulation)
B1	2(B) port (P controlled type, B port regulation)

Pressure gauge option

M1	Without pressure gauge
00	Pressure gauge with MPa display
N0	Pressure gauge with psi display∗2

Part numbers of mounting screw (For repairs)
SY3000: SY3000-23-12A (2 pcs.)
SY5000: SY5000-221-6A (2 pcs.)
SY7000: SY7000-221-6A (3 pcs.)

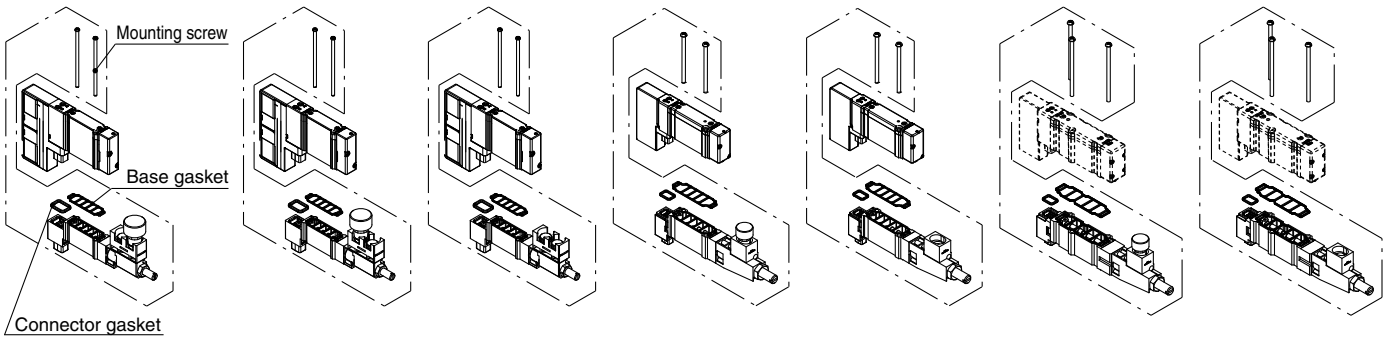

SY30M-05/N5-□ (With pressure gauge/ For odd number station)
SY30M-06/N6-□ (With pressure gauge/ For even number station)
SY30M-M1-□ (Without pressure gauge)
SY50M-00/N0-□ (With pressure gauge)
SY50M-M1-□ (Without pressure gauge)
SY70M-00/N0-□ (With pressure gauge)
SY70M-M1-□ (Without pressure gauge)

Specifications

Interface regulator model		SY30M-□-□-□	SY50M-□-□	SY70M-□-□
Applicable valve model∗1		SY3□$^{0}_{3}$□(R)	SY5□$^{0}_{3}$□(R)	SY7□$^{0}_{3}$□(R)
Regulating port		1(P), 4(A), 2(B)		
Set pressure range		0.1 to 0.7 MPa		
Maximum operating pressure		1.0 MPa		
Fluid		Air		
Ambient and fluid temperatures		–10 to 50°C (No freezing)		
Weight [g]∗2	With pressure gauge	33 (35)∗3	75	93
	Without pressure gauge	27 (29)∗3	69	87

∗1 3-position closed center and pressure center, and 4-position dual 3-port valves are only available for 1(P) port pressure regulation.

∗2 Gasket and mounting screws are included in the weight.

∗3 ( ): Denotes the values of SY30M-□-□-3

∗ Always apply pressure from 1(P) port in the base for interface regulator.

∗ When using in combination with the SY$^{5}_{7}$30$^{0}_{1}$□-□1-E (With residual pressure release valve), the length of the required mounting screws will differ. Please contact SMC for details.

Symbol

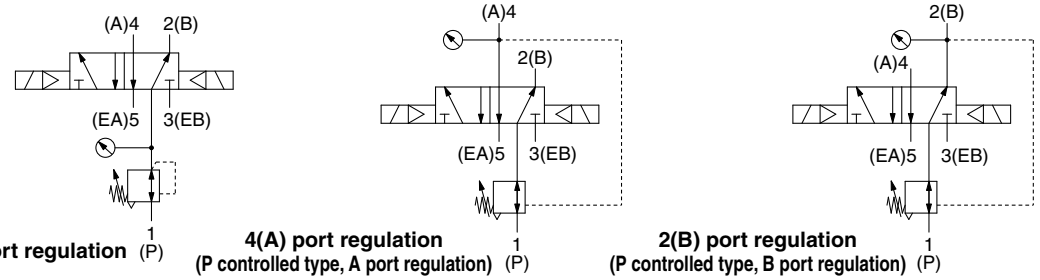

1(P) port regulation

4(A) port regulation (P controlled type, A port regulation)

2(B) port regulation (P controlled type, B port regulation)

⚠Caution

Tightening torque for mounting screw
M2: 0.16 N·m (SY3000)
M3: 0.8 N·m (SY5000/7000)

Manifold Options: Spacer Combinations and Screw List ①

Combination			① SY3000 (M2)		② SY5000 (M3)		③ SY7000 (M3)	
			Round head combination screw	Hexagon socket head cap screw	Round head combination screw	Hexagon socket head cap screw	Round head combination screw	Hexagon socket head cap screw
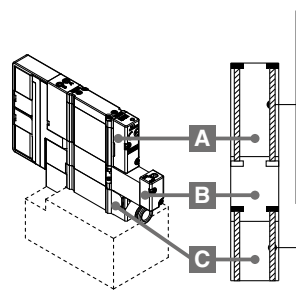 <Round head combination screw> ①: SY3000-23-24A ②: SY5000-221-1A ③: SY7000-221-1A <Hexagon socket head cap screw> ①: SY3000-222-1A ②: SY5000-222-1A ③: SY7000-221-1A	A	Valve	SY3000-23-24A [for 10 valves (20 pcs.)]	SY3000-222-1A [for 10 valves (20 pcs.)]	SY5000-221-1A [for 10 valves (20 pcs.)]	SY5000-222-1A [for 10 valves (20 pcs.)]	SY7000-221-1A [for 10 valves (30 pcs.)]	SY7000-222-1A [for 10 valves (30 pcs.)]
	B	SUP stop valve spacer assembly with residual pressure release valve	SY30M-56-2A (2 pcs.)		SY50M-56-2A (2 pcs.)		SY70M-56-2A (3 pcs.)	
①: SY30M-56-2A ②: SY50M-56-2A ③: SY70M-56-2A	C	Individual SUP (EXH) spacer assembly						
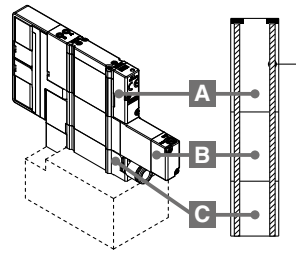 <Round head combination screw> ①: SY3000-23-33A ②: SY5000-221-5A ③: SY7000-221-5A	A	Valve	SY3000-23-33A (2 pcs.)	—	SY5000-221-5A (2 pcs.)	—	SY7000-221-5A (3 pcs.)	—
	B	Double check spacer assembly with residual pressure release valve						
	C	Individual SUP (EXH) spacer assembly						
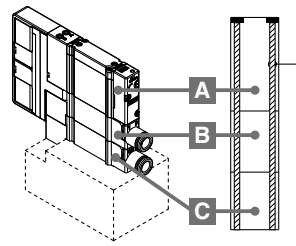 <Round head combination screw> ①: SY3000-23-32A ②: SY5000-221-3A ③: SY7000-221-3A	A	Valve	SY3000-23-32A (2 pcs.)	—	SY5000-221-3A (2 pcs.)	—	SY7000-221-3A (3 pcs.)	—
	B	Individual SUP (EXH) spacer assembly						
	C	Individual EXH (SUP) spacer assembly						
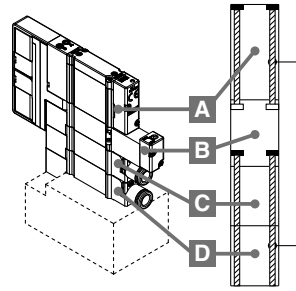 <Round head combination screw> ①: SY3000-23-24A ②: SY5000-221-1A ③: SY7000-221-1A <Hexagon socket head cap screw> ①: SY3000-222-1A ②: SY5000-222-1A ③: SY7000-222-1A ①: SY30M-56-4A ②: SY50M-56-4A ③: SY70M-56-4A	A	Valve	SY3000-23-24A [for 10 valves (20 pcs.)]	SY3000-222-1A [for 10 valves (20 pcs.)]	SY5000-221-1A [for 10 valves (20 pcs.)]	SY5000-222-1A [for 10 valves (20 pcs.)]	SY7000-221-1A [for 10 valves (30 pcs.)]	SY7000-222-1A [for 10 valves (30 pcs.)]
	B	SUP stop valve spacer assembly with residual pressure release valve	SY30M-56-4A (2 pcs.)		SY50M-56-4A (2 pcs.)		SY70M-56-4A (3 pcs.)	
	C	Individual SUP (EXH) spacer assembly						
	D	Individual EXH (SUP) spacer assembly						

∗ Mounting onto a manifold follows the order explained above.
∗ The fitting for individual SUP/EXH spacers comes in a straight type only, since an elbow type would interfere with each spacer assembly when laminated.

⚠ Caution

Tightening torque for mounting screw
M2: 0.16 N·m (SY3000)
M3: 0.8 N·m (SY5000/7000)

Manifold Options: Spacer Combinations and Screw List ②

Combination			① SY3000 (M2)		② SY5000 (M3)		③ SY7000 (M3)	
			Round head combination screw	Hexagon socket head cap screw	Round head combination screw	Hexagon socket head cap screw	Round head combination screw	Hexagon socket head cap screw
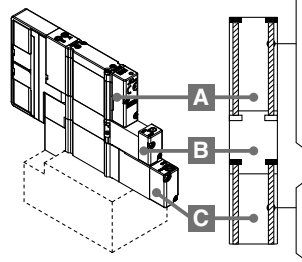 <Round head combination screw> ①: SY3000-23-24A ②: SY5000-221-1A ③: SY7000-221-1A <Hexagon socket head cap screw> ①: SY3000-222-1A ②: SY5000-222-1A ③: SY7000-222-1A ①: SY30M-56-3A ②: SY50M-56-3A ③: SY70M-56-3A	A	Valve	SY3000-23-24A [for 10 valves (20 pcs.)]	SY3000-222-1A [for 10 valves (20 pcs.)]	SY5000-221-1A [for 10 valves (20 pcs.)]	SY5000-222-1A [for 10 valves (20 pcs.)]	SY7000-221-1A [for 10 valves (30 pcs.)]	SY7000-222-1A [for 10 valves (30 pcs.)]
	B	SUP stop valve spacer assembly with residual pressure release valve	SY30M-56-3A (2 pcs.)		SY50M-56-3A (2 pcs.)		SY70M-56-3A (3 pcs.)	
	C	Double check spacer assembly with residual pressure release valve						
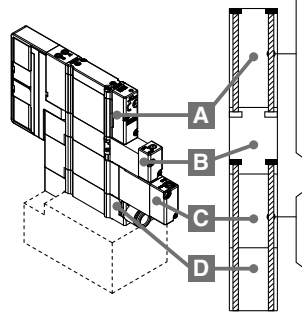 <Round head combination screw> ①: SY3000-23-24A ②: SY5000-221-1A ③: SY7000-221-1A <Hexagon socket head cap screw> ①: SY3000-222-1A ②: SY5000-222-1A ③: SY7000-222-1A ①: SY30M-56-5A ②: SY50M-56-5A ③: SY70M-56-5A	A	Valve	SY3000-23-24A [for 10 valves (20 pcs.)]	SY3000-222-1A [for 10 valves (20 pcs.)]	SY5000-221-1A [for 10 valves (20 pcs.)]	SY5000-222-1A [for 10 valves (20 pcs.)]	SY7000-221-1A [for 10 valves (30 pcs.)]	SY7000-222-1A [for 10 valves (30 pcs.)]
	B	SUP stop valve spacer assembly with residual pressure release valve	SY30M-56-5A (2 pcs.)		SY50M-56-5A (2 pcs.)		SY70M-56-5A (3 pcs.)	
	C	Double check spacer assembly with residual pressure release valve						
	D	Individual EXH (SUP) spacer assembly						
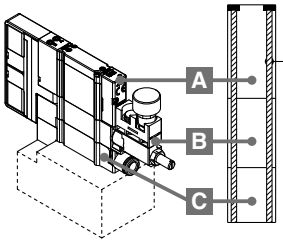 <Round head combination screw> ①: SY3000-23-32A ②: SY5000-221-7A ③: SY7000-221-7A	A	Valve	SY3000-23-32A (2 pcs.)	—	SY5000-221-7A (2 pcs.)	—	SY7000-221-7A (3 pcs.)	—
	B	Interface regulator						
	C	Individual SUP (EXH) spacer assembly						

* Mounting onto a manifold follows the order explained above.
* The fitting for individual SUP/EXH spacers comes in a straight type only, since an elbow type would interfere with each spacer assembly when laminated.
* When laminating an interface regulator with other options, only the combinations in the table above are possible.

Dimensions: Manifold Options/SY3000 Series

■Blanking plate assembly

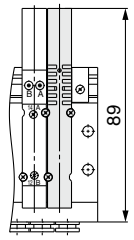

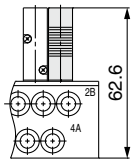

<Type 50, 51, 52>

■Individual SUP/EXH spacer assembly (Top/Bottom ported)

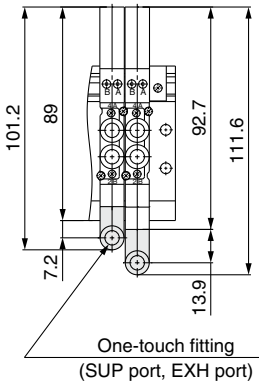

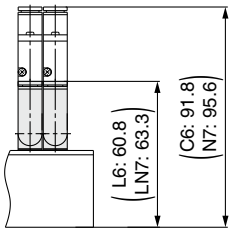

<Type 51, 52>

■Double check spacer assembly with residual pressure release valve

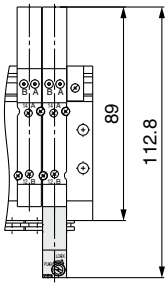

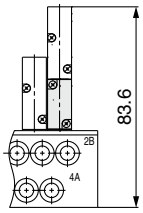

<Type 50, 51>

■Individual SUP/EXH spacer assembly (Side ported)

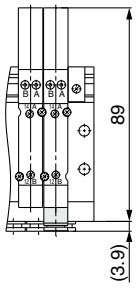

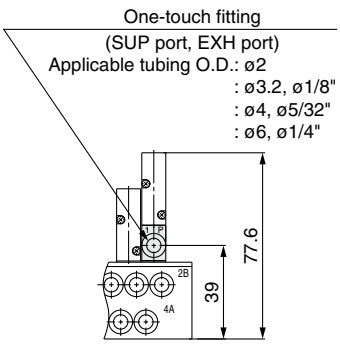

<Type 50>

■SUP stop valve spacer assembly with residual pressure release valve

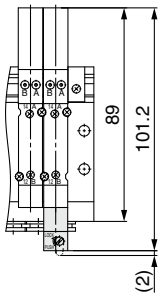

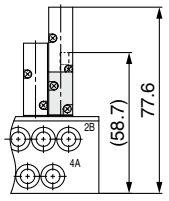

<Type 50, 51, 52>

∗ The dimensions within ( ) apply to the SY30M-50-1AE.

■Interface regulator

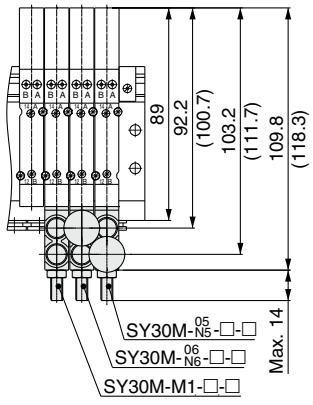

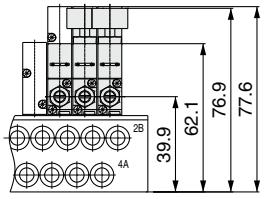

<Type 50, 51, 52>

∗ The dimensions within ( ) apply to the SY30M-□-□-3.

Dimensions: Manifold Options/SY5000 Series

■ Blanking plate assembly

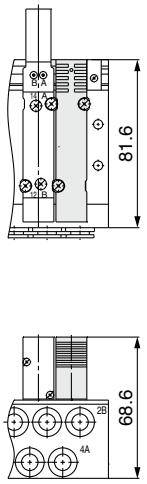

<Type 50, 51, 52>

■ Individual SUP/EXH spacer assembly (Top/Bottom ported)

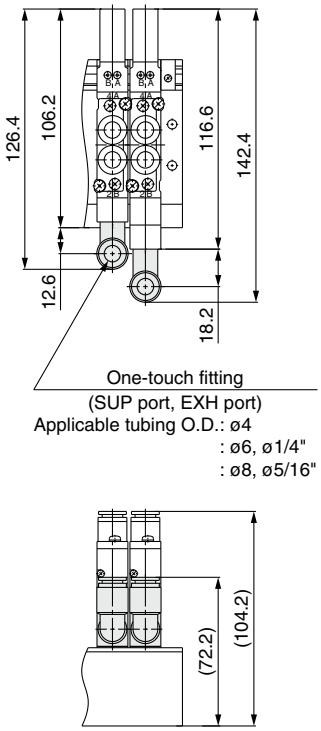

<Type 51, 52>

■ Double check spacer assembly with residual pressure release valve

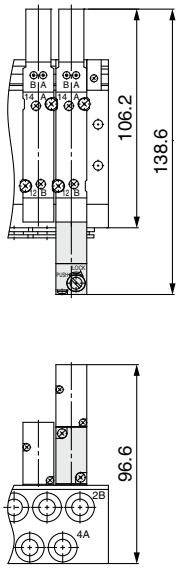

<Type 50, 51>

■ Individual SUP/EXH spacer assembly (Side ported)

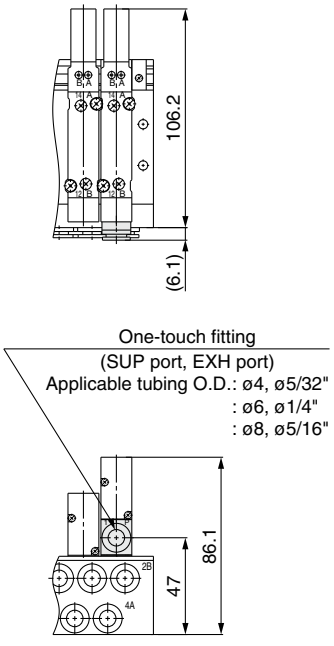

<Type 50>

■ SUP stop valve spacer assembly with residual pressure release valve

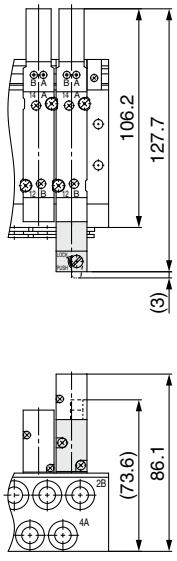

<Type 50, 51, 52>

∗ The dimensions within ( ) apply to the SY50M-50-1AE.

■ Interface regulator

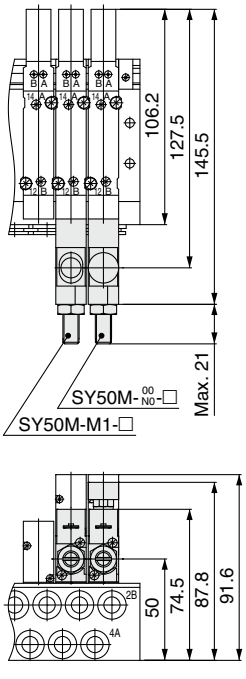

<Type 50, 51, 52>

Dimensions: Manifold Options/SY7000 Series

■ Blanking plate assembly

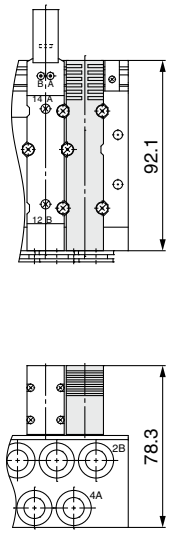

<Type 50, 51, 52>

■ Individual SUP/EXH spacer assembly (Top/Bottom ported)

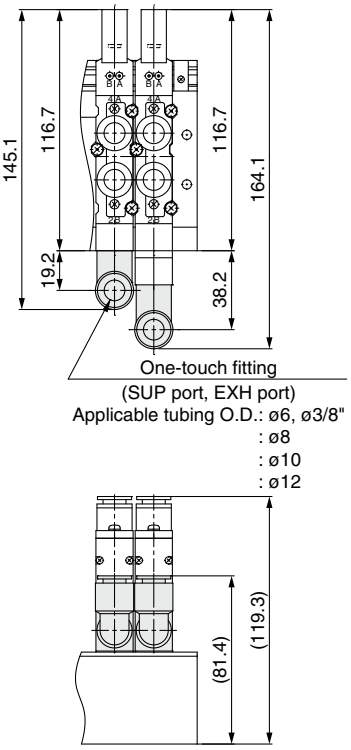

<Type 51, 52>

■ Double check spacer assembly with residual pressure release valve

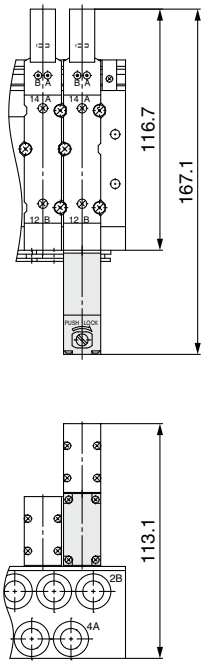

<Type 50, 51>

■ Individual SUP/EXH spacer assembly (Side ported)

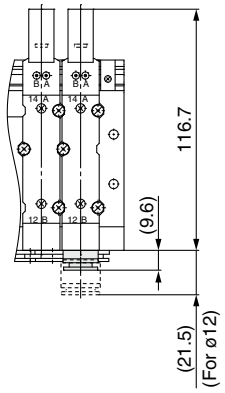

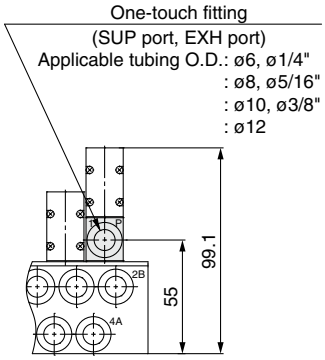

<Type 50>

■ SUP stop valve spacer assembly with residual pressure release valve

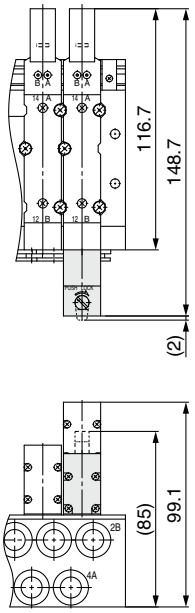

<Type 50, 51, 52>

* The dimensions within ( ) apply to the SY70M-50-1AE.

■ Interface regulator

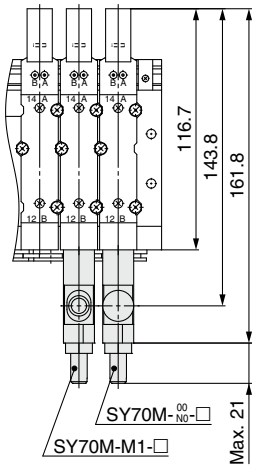

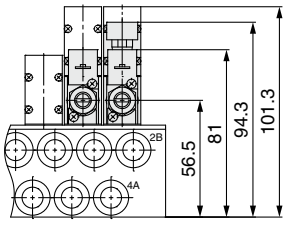

<Type 50, 51, 52>

Plug-in Sub-plate Type
[IP67 Compliant]

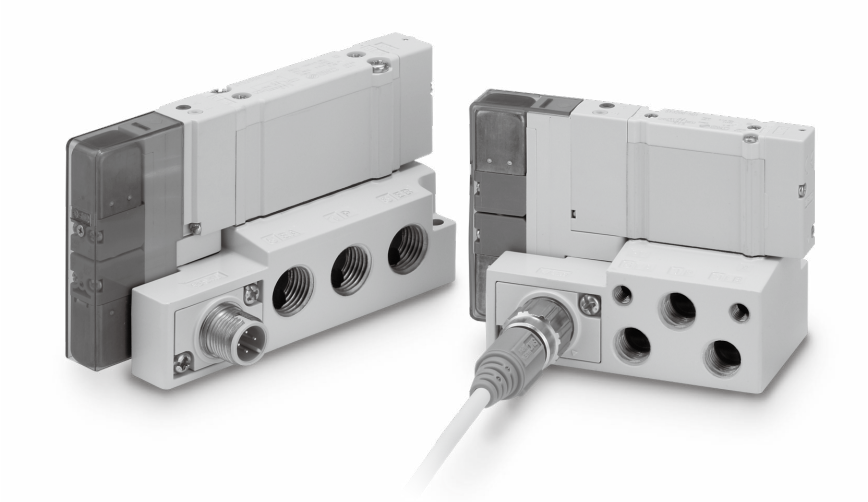

SY3000/5000/7000 Series

Plug-in Single Unit/Sub-plate Type [IP67 Compliant]

(Side ported, Bottom ported, Top ported)

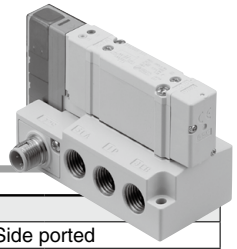

Plug-in Sub-plate Specifications

Manifold type	Plug-in sub-plate			
Piping direction	Side ported	1(P), 5(EA)/3(EB) port, 4(A)/2(B) port	Side ported	
	Bottom ported	1(P), 5(EA)/3(EB) port, 4(A)/2(B) port	Bottom ported	
	Top ported	1(P), 5(EA)/3(EB) port	Side ported	
		4(A)/2(B) port	Top ported	
SUP/EXH port type	SUP/EXH individual port [5(EA), 3(EB) individual]			
Applicable connector	M12 waterproof connector			
Internal wiring	Positive common, Negative common			
Port size	Side ported	1(P), 5(EA)/3(EB) port, 4(A)/2(B) port	SY3000	1/8
			SY5000	1/4
			SY7000	3/8
	Bottom ported	1(P), 5(EA)/3(EB) port, 4(A)/2(B) port	SY3000	1/8
			SY5000	1/4
			SY7000	3/8
	Top ported	1(P), 5(EA)/3(EB) port	SY3000	1/8
			SY5000	1/4
			SY7000	3/8
		4(A)/2(B) port	Compliant with the valve*1	
Enclosure (Based on IEC60529)	IP67			
Weight: W [g]*2	SY3000	Side ported	99	
		Bottom ported	109	
		Top ported	104	
	SY5000	Side ported	145	
		Bottom ported	172	
		Top ported	159	
	SY7000	Side ported	205	
		Bottom ported	232	
		Top ported	227	

*1 Refer to page 15 for valve specifications.
*2 The valve and cable weights are not included. To obtain the weight with valves attached, add the valve weights given on page 17, and to include the cable weight, add the connector cable weight on page 283.

Plug-in Sub-plate Flow Rate Characteristics

Rubber Seal

Series	Sub-plate piping location	Fitting port size (P, E)	Fitting port size (A, B)	1 → 4/2 C	1 → 4/2 b	4/2 → 5/3 C	4/2 → 5/3 b
SY3000	Side ported	1/8	1/8	1.8	0.27	1.7	0.26
	Bottom ported	1/8	1/8	1.7	0.23	1.4	0.27
	Top ported	1/8	C6	1.3	0.34	1.5	0.27
SY5000	Side ported	1/4	1/4	4.2	0.21	4.0	0.26
	Bottom ported	1/4	1/4	4.0	0.19	4.0	0.23
	Top ported	1/4	C8	2.9	0.29	4.1	0.33
SY7000	Side ported	3/8	3/8	6.5	0.24	6.3	0.23
	Bottom ported	3/8	3/8	6.4	0.22	6.3	0.22
	Top ported	3/8	C12	5.4	0.30	6.0	0.27

∗ Calculation of effective area S and sonic conductance C: S = 5.0 x C
∗ The value is for individually operated 2-position type.

Metal Seal

Series	Sub-plate piping location	Fitting port size (P, E)	Fitting port size (A, B)	1 → 4/2 C	1 → 4/2 b	4/2 → 5/3 C	4/2 → 5/3 b
SY3000	Side ported	1/8	1/8	1.4	0.14	1.3	0.26
	Bottom ported	1/8	1/8	1.3	0.13	1.3	0.22
	Top ported	1/8	C6	1.2	0.22	1.4	0.29
SY5000	Side ported	1/4	1/4	3.2	0.13	3.5	0.16
	Bottom ported	1/4	1/4	3.0	0.12	3.2	0.17
	Top ported	1/4	C8	2.6	0.23	3.2	0.19
SY7000	Side ported	3/8	3/8	4.6	0.10	4.9	0.16
	Bottom ported	3/8	3/8	4.6	0.10	4.9	0.17
	Top ported	3/8	C12	4.0	0.18	4.7	0.16

How to Order

In the case of (Valve) + (Sub-plate) (Built-in valve type part no.)

Side/Bottom ported

SY 3 1 0 0 ❶ ❷ ❸ ❹ ❺ ❻ ❼ – 5 ❽ ❾ ❿ 1 ⓫ ⓬ – ⓭ – W1 – ⓮ ⓯ 01 ⓰ ⓱

Top ported

SY 3 1 3 0 ❶ ❷ ❸ ❹ ❺ ❻ ❼ – 5 ❽ ❾ ❿ 1 – M5 ⓫ ⓬ – ⓭ – W1 – ⓮ ⓯ 01 ⓰ ⓱

❶ Series

3	SY3000
5	SY5000
7	SY7000

❷ Type of actuation

1	2-position	Single
2		Double
3	3-position	Closed center
4		Exhaust center
5		Pressure center
A*1	4-position dual 3-port	N.C./N.C.
B*1		N.O./N.O.
C*1		N.C./N.O.

*1 Only the rubber seal type is available for the 4-position dual 3-port valve.

❸ Seal type

0	Rubber seal
1	Metal seal

❹ Pilot type

Nil	Internal pilot
R	External pilot

❺ Back pressure check valve (Built-in valve type)

Nil	None
H	Built-in

* Only the rubber seal type is available.
* The built-in valve type back pressure check valve is not available for the 3-position type or the SY7000.

❻ Pilot valve option

Nil	Standard (0.7 MPa)
B	Quick response type (0.7 MPa)
K*1	High pressure type (1.0 MPa)

*1 Only the metal seal type is available for the high pressure type.

❼ Coil type

Nil	Standard
T	With power saving circuit (Continuous duty type)

* Be sure to select the power saving circuit type if the valve is to be continuously energized for long periods of time.
* Be careful of the energizing time when the power saving circuit is selected. Refer to page 292 for details.

❽ Rated voltage

5	24 VDC
6	12 VDC

❾ Light/surge voltage suppressor and common specification

Symbol	With light	Surge voltage suppressor	Common specification
Nil	—	—	Non-polar
R	—	●	
U	●		
S	—		Positive common
Z	●		
NS	—		Negative common
NZ	●		

* For the non-polar type, be careful of surge voltage intrusion. Refer to page 293 for details.
* Only "Z" and "NZ" types are available with a power saving circuit.

❿ Manual override

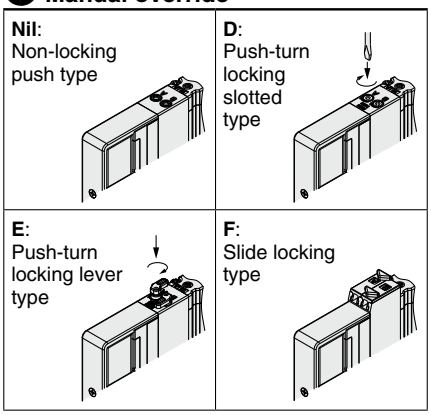

* Refer to page 34 for the safety slide locking manual override.

⓫ A, B port size (* Top-ported valve only)

Thread piping

Symbol	Port size	Applicable series
M5	M5 x 0.8	SY3000
01	1/8	SY5000
02	1/4	SY7000

Metric size (One-touch fitting)

Symbol	A, B port	SY3000	SY5000	SY7000
C2	ø2	●	—	—
C3	ø3.2	●	—	—
C4	ø4	●	●	—
C6	ø6	●	●	●
C8	ø8	—	●	●
C10	ø10	—	—	●
C12	ø12	—	—	●

Inch size (One-touch fitting)

Symbol	A, B port	SY3000	SY5000	SY7000
N1	ø1/8"	●	—	—
N3	ø5/32"	●	●	—
N7	ø1/4"	●	●	●
N9	ø5/16"	—	●	●
N11	ø3/8"	—	—	●

⓬ A, B port thread type (Thread piping)

Nil	Rc
F	G
N	NPT
T	NPTF

* Only Nil is available for M5.

⓭ Type of mounting screw

Nil	Round head combination screw
B	Hexagon socket head cap screw
K	Round head combination screw (Drop prevention type)
H	Hexagon socket head cap screw (Drop prevention type)

* For "K" and "H," the valve body cover has a drop prevention construction to stop the mounting screws from falling out when the valve is removed for maintenance, etc.
* Refer to page 283 when the base gaskets and mounting screws are required for maintenance.
* When using an optional spacer assembly, "B" and "H" cannot be selected.

⓮ Wiring specifications (Sub-plate)

WO	Without M12 connector cable
W1	With M12 connector cable (300 mm)
W2	With M12 connector cable (500 mm)
W3	With M12 connector cable (1000 mm)
W4	With M12 connector cable (2000 mm)
W7	With M12 connector cable (5000 mm)

* When ordering a product with M12 connector cable, the connector cable is included.

⓯ Port location (Sub-plate)

Nil	Side ported
B	Bottom ported
V*1	Top ported (1P, 5EA, 3EB port: Side ported)

*1 Only available for the valve piping type "3" top ported

⓰ Port size (Sub-plate)

Symbol	Port size	Applicable series
01	1/8	SY3000
02	1/4	SY5000
03	3/8	SY7000

⓱ Thread type (Sub-plate)

Nil	Rc
F	G
N	NPT
T	NPTF

* When mounting a special order (including Made-to-Order specification) valve or manifold option (spacer, etc.) on the sub-plate, add the valve part number or spacer part number under the sub-plate part number to place an order. For details, refer to the ordering example on page 283.
* When selecting a product with residual pressure release valve or vacuum release valve with restrictor, after selecting a model from page 24 or 26, make selections for items 15 to 18 above.

How to Order

In the case of (Sub-plate) (Sub-plate single unit part no.)

∗ Without valve

SY 3 0M – 27 – 1 – W1 – □ 01 □

❶ ❷ ❸ ❹ ❺

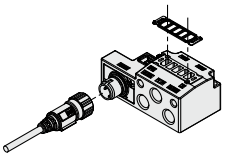

∗ Base gasket is included.
∗ Valve mounting screws are not included.

❶ Series

3	SY3000
5	SY5000
7	SY7000

❷ Wiring specifications

WO	Without M12 connector cable
W1	With M12 connector cable (300 mm)
W2	With M12 connector cable (500 mm)
W3	With M12 connector cable (1000 mm)
W4	With M12 connector cable (2000 mm)
W7	With M12 connector cable (5000 mm)

∗ Refer to the table below for connector cable part numbers.
∗ When ordering a product with M12 connector cable, the connector cable is included.

❸ Port location (Sub-plate)

Nil	Side ported
B	Bottom ported
V	Top ported [1(P), 5(EA), 3(EB) port: Side ported]

❹ Port size

Symbol	Port size	Applicable series
01	1/8	SY3000
02	1/4	SY5000
03	3/8	SY7000

❺ Sub-plate thread type

Nil	Rc
F	G
N	NPT
T	NPTF

How to Order when mounting a special order (including Made-to-Order specification) valve on the sub-plate (Ordering example: X90)

SY30M-27-1-W1-01····· 1 set (Sub-plate single unit part no.)
∗**SY3200-5U1-X90**····· 1 set (2-position double part no./Main valve fluororubber specification)

Ordering example when mounting a manifold option (spacer, etc.)

SY30M-27-1-W1-01····· 1 set (Sub-plate single unit part no.)
∗**SY3400-5U1** ····· 1 set (3-position exhaust center part no.)
∗**SY30M-60-1A**····· 1 set (Part no. for double check spacer with residual pressure release valve)

⚠ Caution

Due to the properties of the double check spacer, assembly carried out by the customer is not recommended. If a double check spacer is to be used, be sure to order the type that is built in to the sub-plate as shown in the ordering example above.

Sub-plate Parts Nos.

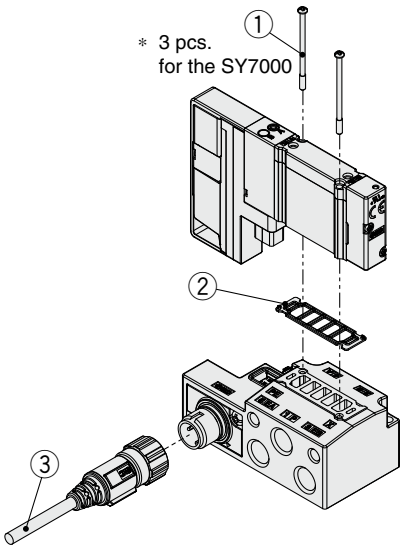

No.	Description		Part no. SY3000	Part no. SY5000	Part no. SY7000	Note
①	Valve mounting screw	Round head combination screw	SY3000-23-24A (M2 x 32)	SY5000-221-1A (M3 x 32.5)	SY7000-221-1A (M3 x 36.5)	Part numbers shown on the left are for 10 valves (20 pcs.). (30 pcs. for the SY7000)
		Hexagon socket head cap screw	SY3000-222-1A (M2 x 32)	SY5000-222-1A (M3 x 32.5)	SY7000-222-1A (M3 x 36.5)	
②	Base gasket (for sub-plate)		SY30M-11-1A	SY50M-11-1A	SY70M-11-1A	Part numbers shown on the left are for 10 valves (10 pcs.).
③	M12 waterproof connector cable		ZS-37-L			Cable length: 300 mm Cable weight: Approx. 18 g
			ZS-37-M			Cable length: 500 mm Cable weight: Approx. 23 g
			ZS-37-N			Cable length: 1000 mm Cable weight: Approx. 36 g
			ZS-37-P			Cable length: 2000 mm Cable weight: Approx. 62 g
			ZS-37-C			Cable length: 5000 mm Cable weight: Approx. 140 g

⚠ Caution

Tightening torque

M2: 0.16 N·m (SY3000)
M3: 0.8 N·m (SY5000/7000)

Plug-in Single Unit/Sub-plate | Side Ported Top Ported

Dimensions: SY3000 Series

SY3□0$^{0}_{1}$□□□□-□□□1-W□-01□ (Side ported)

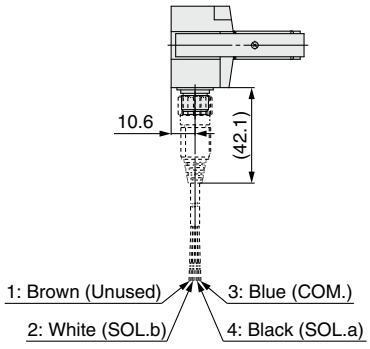

Sub-plate side pin arrangement
(No numeric indication)

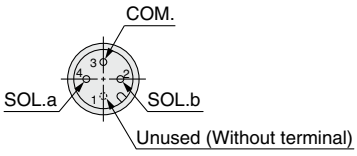

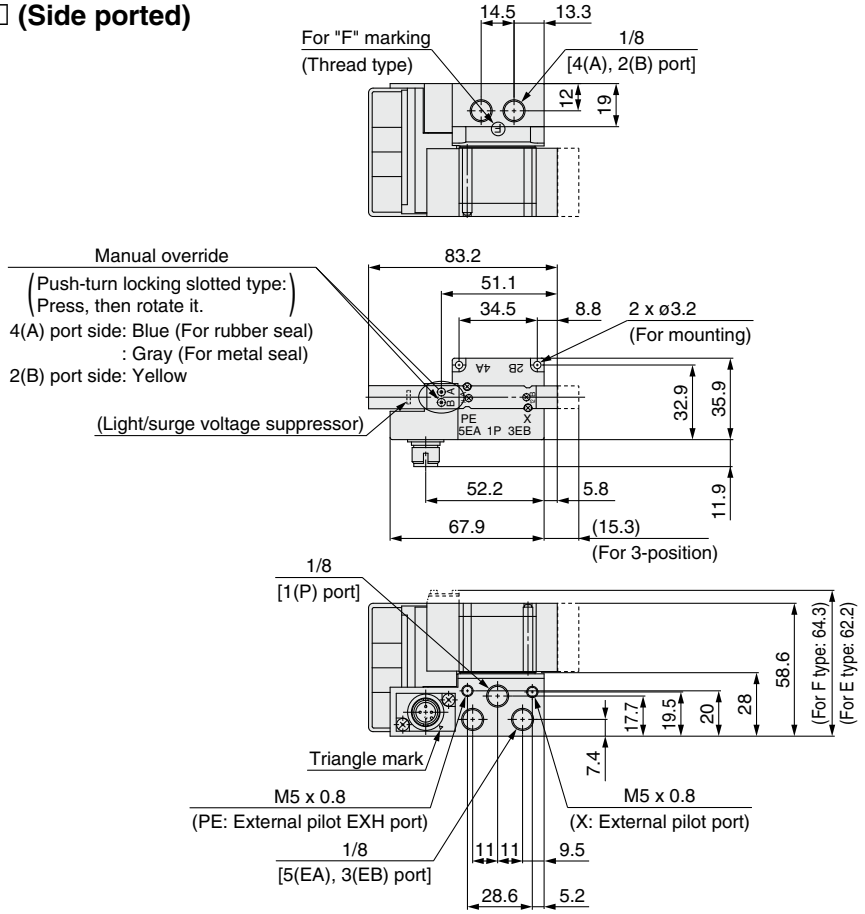

∗ These figures show the "SY3200-5Z1-WO-01F."

SY3□3$^{0}_{1}$□□□□-□□□1-□□-W□-V01□ (Top ported)

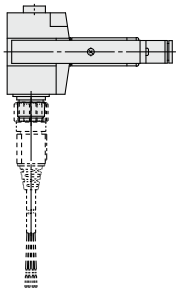

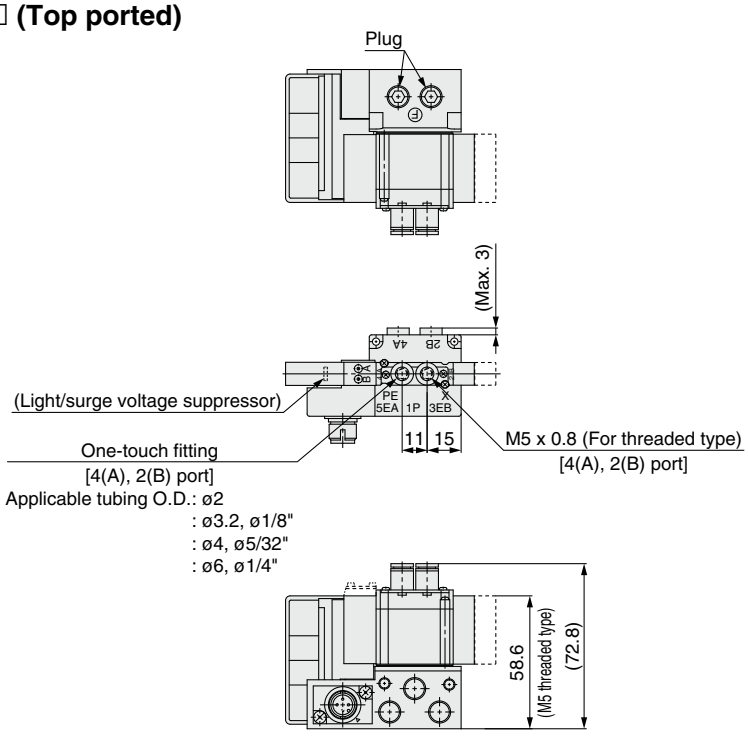

∗ These figures show the "SY3230-5Z1-C6-WO-V01F."
∗ 1(P), 5(EA), 3(EB), X, and PE ports are side ported.

Dimensions: SY3000 Series

Plug-in Single Unit/Sub-plate | Bottom Ported

SY3□0$^{0}_{1}$□□□□-□□□1-W□-B01□ (Bottom ported)

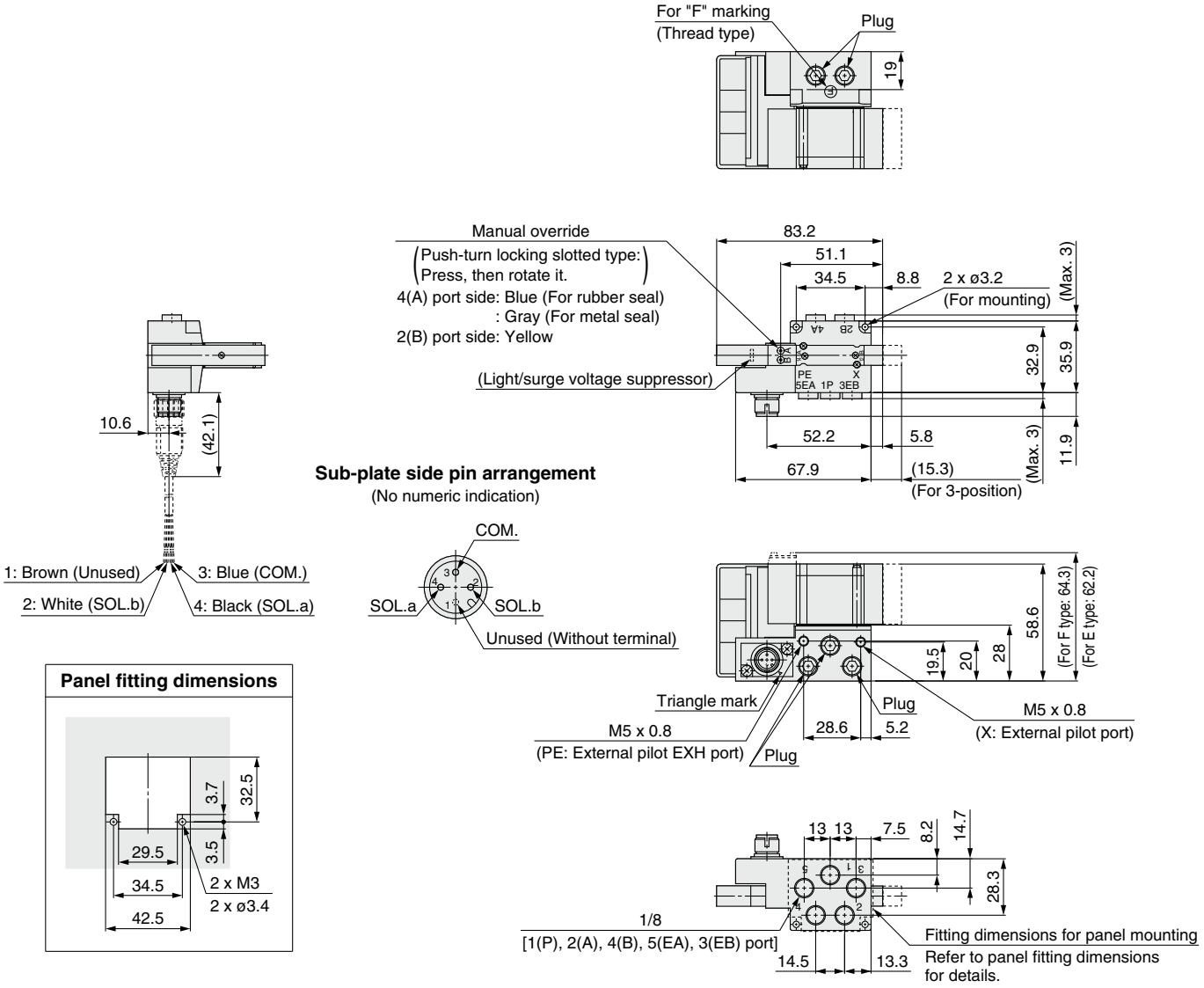

∗ These figures show the “SY3200-5Z1-WO-B01F.”

Plug-in Single Unit/Sub-plate | Side Ported Top Ported

Dimensions: SY5000 Series

SY5□0$^{0}_{1}$□□□□-□□□1-W□-02□ (Side ported)

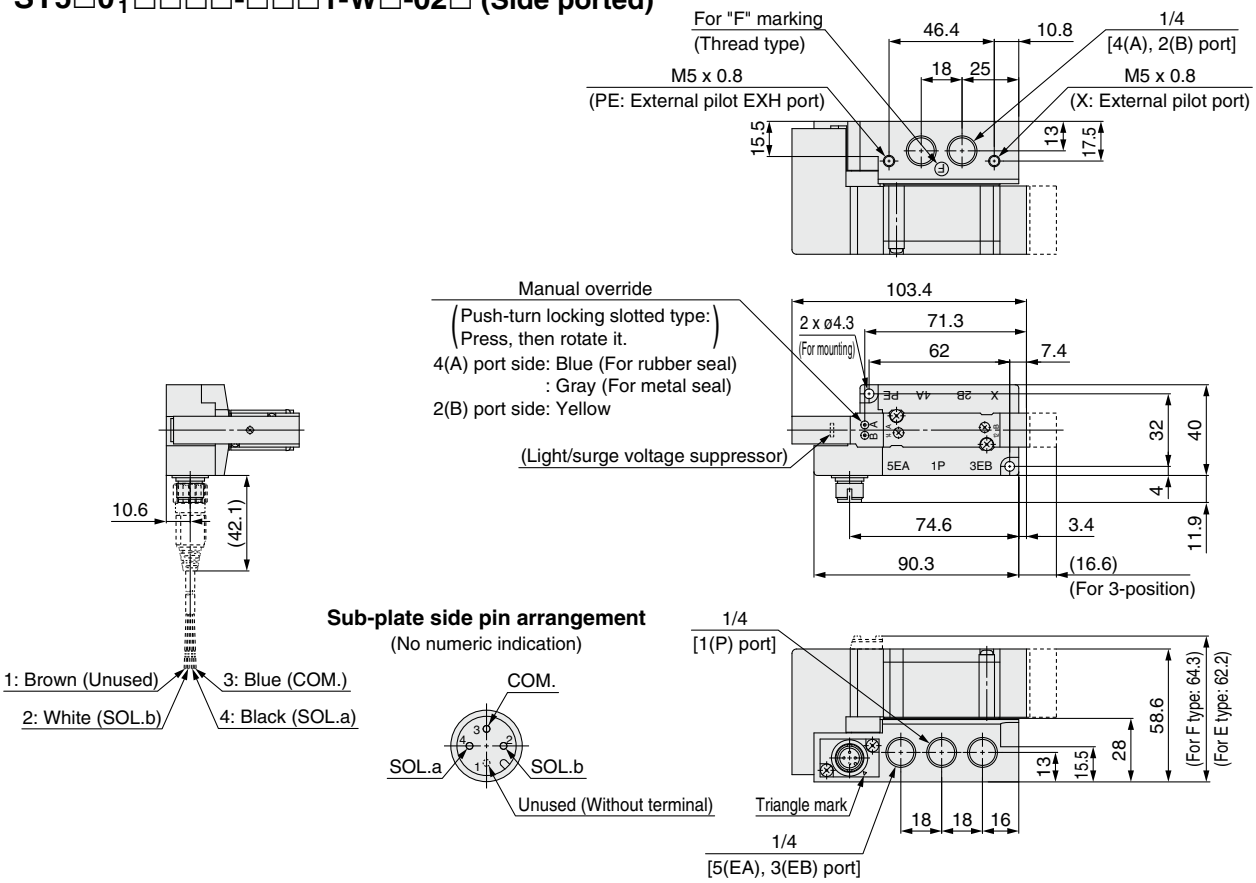

∗ These figures show the "SY5200-5Z1-WO-02F."

SY5□3$^{0}_{1}$□□□□-□□□1-□□-W□-V02□ (Top ported)

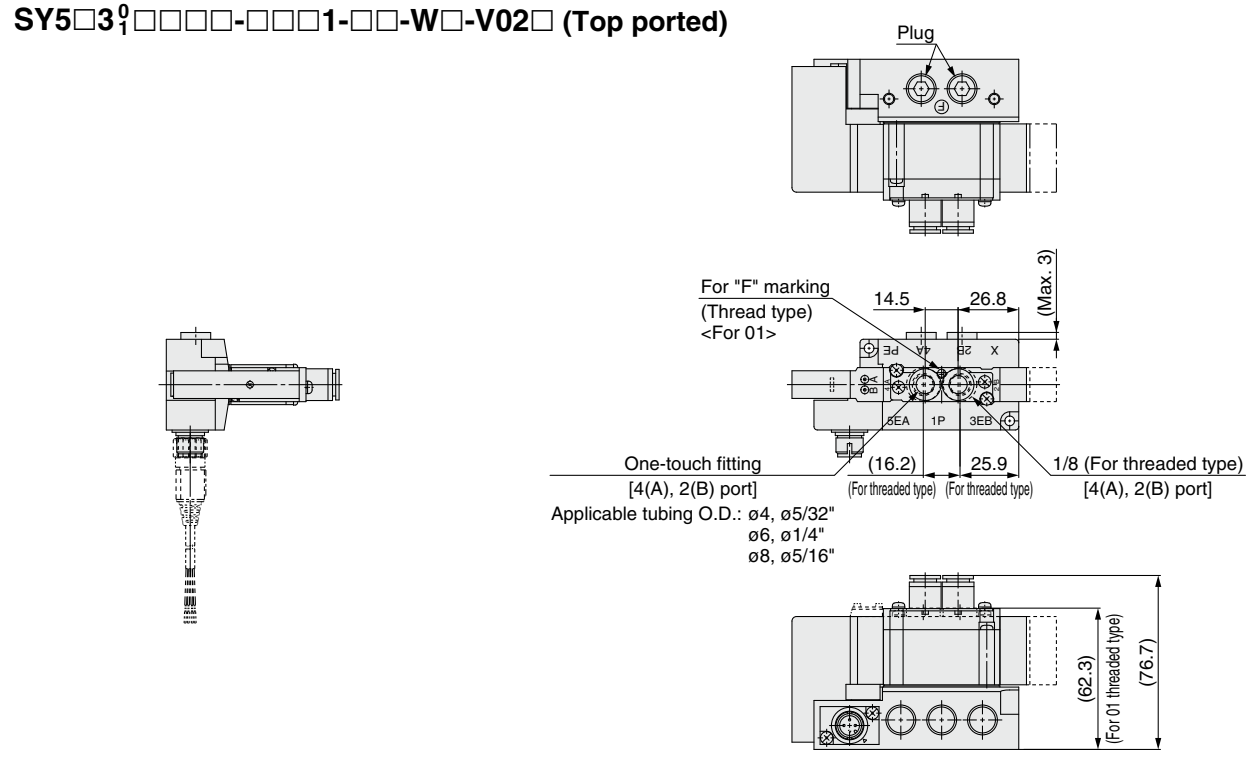

∗ These figures show the "SY5230-5Z1-C8-WO-V02F."
∗ 1(P), 5(EA), 3(EB), X, and PE ports are side ported.

Dimensions: SY5000 Series

Plug-in Single Unit/Sub-plate | Bottom Ported

SY5□0$^{0}_{1}$□□□□-□□□1-W□-B02□ (Bottom ported)

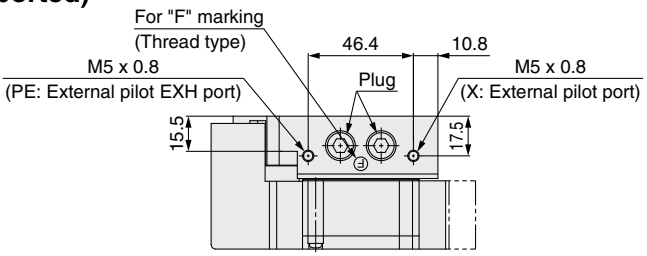

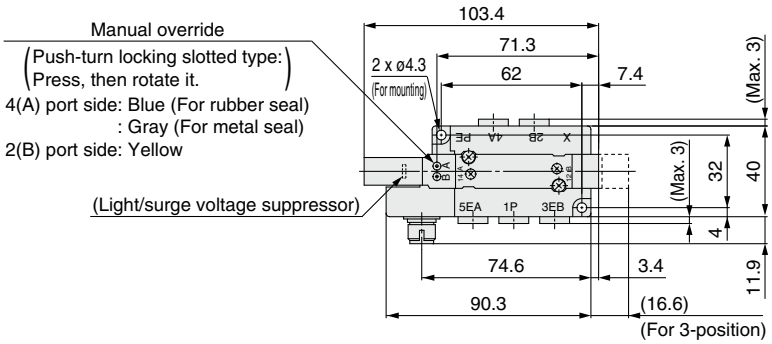

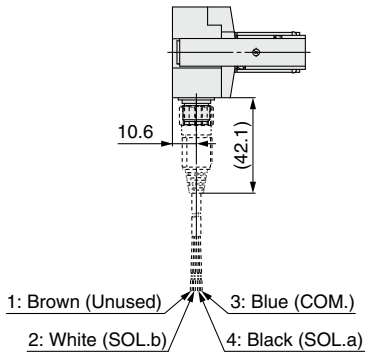

Sub-plate side pin arrangement

(No numeric indication)

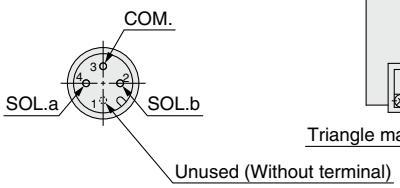

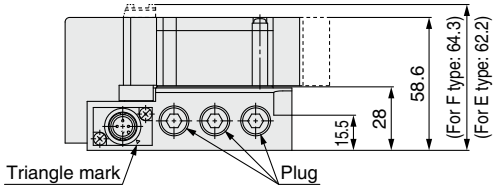

Panel fitting dimensions

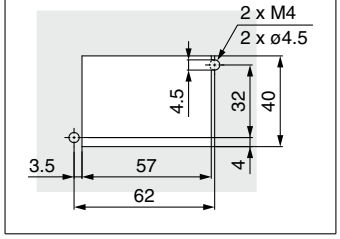

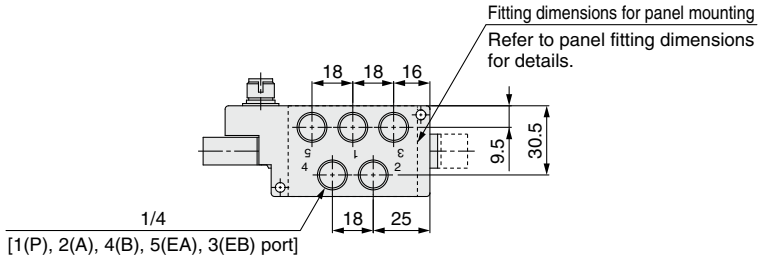

* These figures show the “SY5200-5Z1-WO-B02F.”

Plug-in Single Unit/Sub-plate | Side Ported Top Ported

Dimensions: SY7000 Series

SY7□0$^{0}_{1}$□□□□-□□□1-W□-03□ (Side ported)

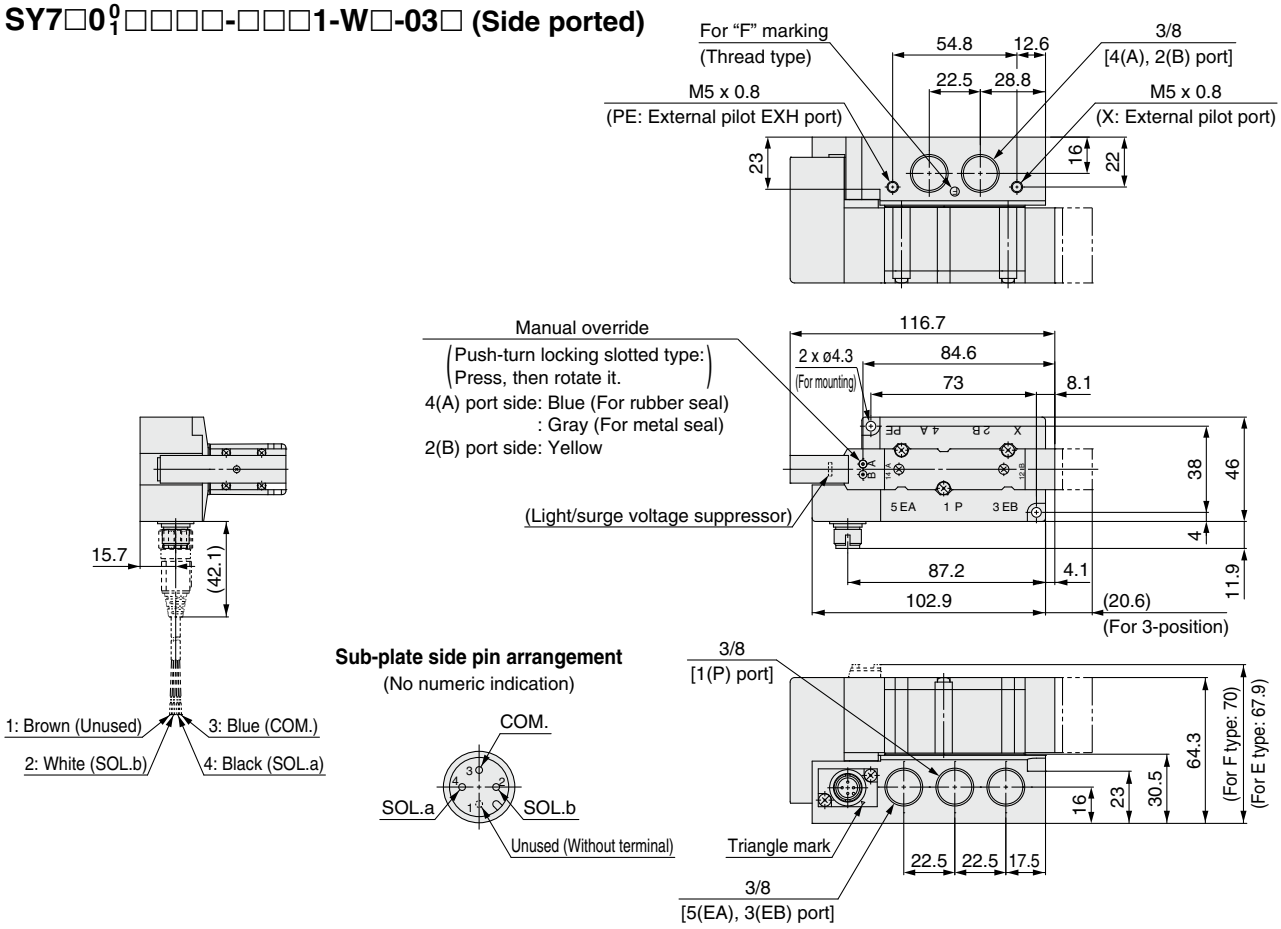

∗ These figures show the "SY7200-5Z1-WO-03F."

SY7□3$^{0}_{1}$□□□□-□□□1-□□-W□-V03□ (Top ported)

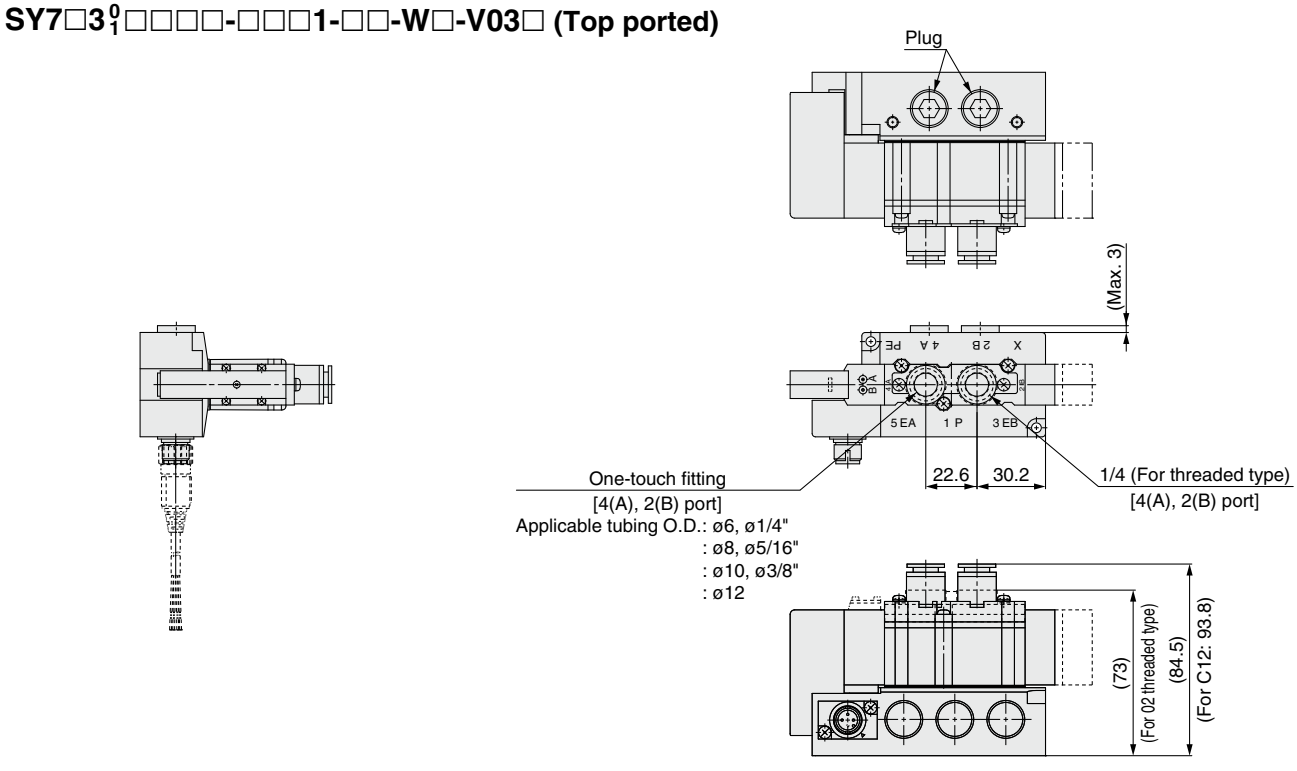

∗ These figures show the "SY7230-5Z1-C10-WO-V03F."
∗ 1(P), 5(EA), 3(EB), X, and PE ports are side ported.

Dimensions: SY7000 Series

Plug-in Single Unit/Sub-plate | Bottom Ported

SY7□0$^{0}_{1}$□□□□-□□□1-W□-B03□ (Bottom ported)

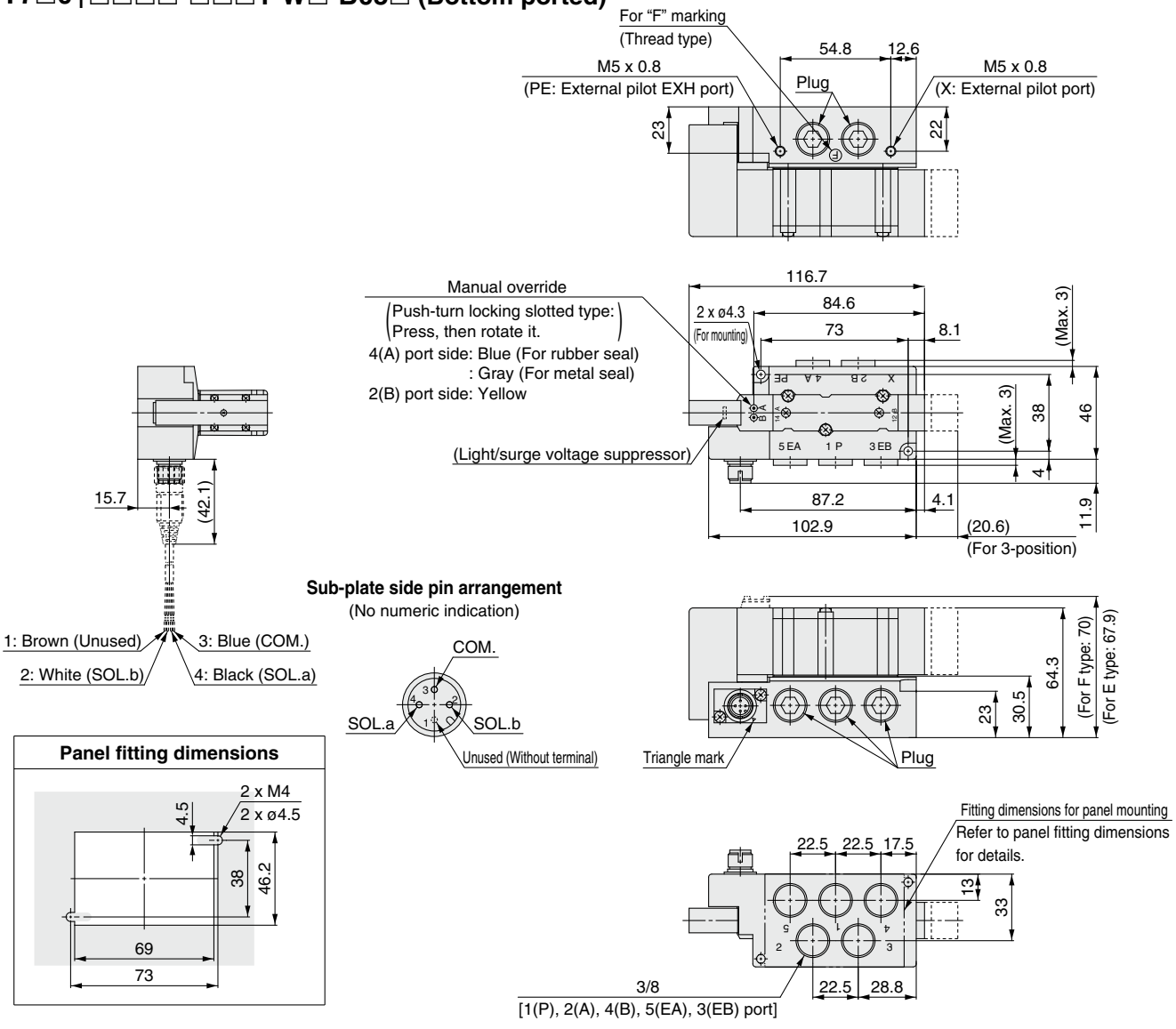

* These figures show the "SY7200-5Z1-WO-B03F."

SY3000/5000/7000 Series
Specific Product Precautions 1

Be sure to read this before handling the products. Refer to the back cover for safety instructions. For 3/4/5-port solenoid valve precautions, refer to the "Handling Precautions for SMC Products" and the "Operation Manual" on the SMC website: https://www.smcworld.com

Environment

⚠Warning

1. Do not use valves in atmospheres of corrosive gases, chemicals, sea water, water, water vapor, or where there is direct contact with any of these.
2. Products compliant with IP67 enclosures (based on IEC60529) are protected against dust and water, however, these products cannot be used in water. If using in an environment that is exposed to water and dust splashes, take measures such as using a protective cover.
3. When using built-in silencer type manifold with an IP67 enclosure, keep the exhaust port of the silencer from coming in direct contact with water or other liquids.
4. The metal seal valve is provided with a hole to discharge the pilot EXH. When using in atmospheres containing water and dust, mount it horizontally.

Valve Mounting

⚠Caution

Mount it so that there is no slippage or deformation in gaskets, and tighten with the tightening torque as shown to the right.

Series	Thread size	Tightening torque
SY3000	M2	0.16 N·m
SY5000/7000	M3	0.8 N·m

Manual Override

⚠Warning

Regardless of an electric signal for the valve, the manual override is used for switching the main valve. Connected actuator is started by manual operation. Use the manual override after confirming that there is no danger.

■ Non-locking push type

Push down on the manual override button until it stops.

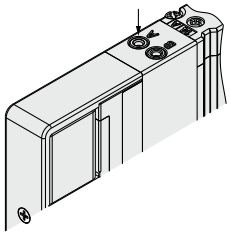

■ Push-turn locking slotted type [D type]

Push down on the manual override with a small flat head screwdriver until it stops, and then turn it 90° clockwise. The manual override is then locked. To release it, turn it counterclockwise.

If it is not turned, it can be operated the same way as the non-locking push type.

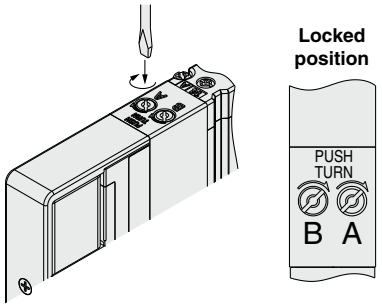

Manual Override

⚠Warning

■ Push-turn locking lever type [E type]

Push down on the manual override by finger until it stops, and then turn it 60° clockwise. The manual override is then locked. To release it, turn it counterclockwise. If it is not turned, it can be operated the same way as the non-locking push type.

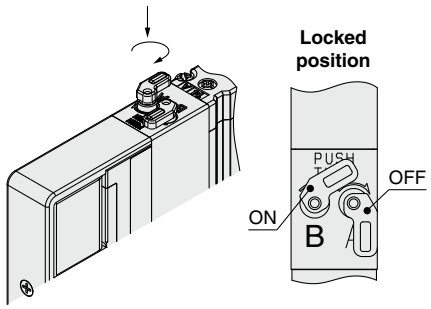

Carefully check the manual override projection amount.
Max. (at OFF): 3.7 mm

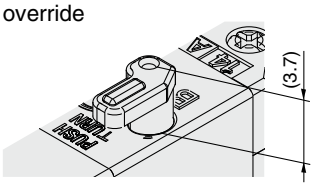

⚠Caution

Do not apply excessive torque when turning the manual override. [0.1 N·m]

When locking the manual override, be sure to push it down before turning. Turning without first pushing it down can cause damage to the manual override and other trouble such as air leakage, etc.

■ Slide locking type (Manual)

It is locked by sliding the manual override all the way in the direction indicated by the arrow (ON side) with a small flat head screwdriver or with your fingers. Slide it in the direction indicated by the arrow (OFF side) to release it.

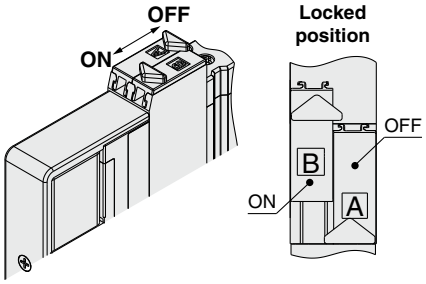

Specific Product Precautions 2

Be sure to read this before handling the products. Refer to the back cover for safety instructions. For 3/4/5-port solenoid valve precautions, refer to the "Handling Precautions for SMC Products" and the "Operation Manual" on the SMC website: https://www.smcworld.com

Back Pressure Check Valve

⚠Caution

- There are two types of back pressure check valves; the type which is built into a valve (rubber seal type only) and the type which is built in on the manifold side with a connector connection. Both types have a check valve built in to prevent back pressure.
  Please note that for this reason, even if a valve with an external pilot specification is used, it cannot be pressurized from exhaust port [3/5(E)]. As compared with the types which do not integrate the back pressure check valve, C value of the flow rate characteristics goes down. Please contact SMC for details.
- The manifold installed type back pressure check valve assembly is assembly parts with a check valve structure. However, since slight air leakage against the back pressure is allowed due to its structure, adverse effects of the back pressure due to increase in exhaust resistance cannot be prevented if the manifold exhaust port and other exhaust ports are put together for piping or if the piping diameter is narrowed. As a result, this may cause the actuator and air operated equipment to malfunction. So, be careful not to restrict the exhaust air. If the exhaust resistance becomes large, select a built-in valve type with rubber seal.
- Do not switch valves when A or B port is open to the atmosphere, or while the actuators and air operated equipment are in operation. For built-in valve type with rubber seal, the back pressure prevention seal may be peeled off, which may cause air leakage or malfunctions. Use caution especially when performing a trial operation or maintenance work.

Exhaust Throttle

⚠Caution

The SY series pilot valve and main valve share a common exhaust inside the valve. Therefore, do not block the exhaust port when arranging the piping.

Used as a 3-Port Valve

⚠Caution

■ In case of using a 5-port valve as a 3-port valve

The SY3000/5000/7000 series can be used as normally closed (N.C.) or normally open (N.O.) 3-port port valves by closing one of the cylinder ports 4(A) or 2(B) with a plug. However, they should be used with the exhaust ports kept open. They are convenient at times when a double solenoid type 3-port valve is required.

Plug position		B port	A port
Type of actuation		N.C.	N.O.
Number of solenoids	Single	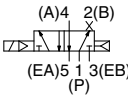	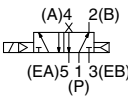
	Double	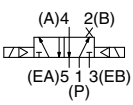	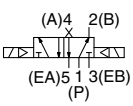

Valve and Manifold Combination

The SY series plug-in valve has the common configuration of the valve mounting surface between base-mounted type (SY$^{3}_{5}$□0□) and top-ported type (SY$^{3}_{5}$□3□), therefore, it can be mounted to all manifolds of the side-ported type (Type 50 and Type 10), the bottom-ported type (Type 51 and Type 11), and the top-ported type (Type 52 and Type 12). For example, air output can be obtained from both sides of the A and B ports of the manifold and the valve by mounting a top-ported valve to a side-ported or bottom-ported manifold, and a pressure switch can be connected to the output port on one side. However, when selecting valves and manifolds, note that when a base-mounted valve is mounted to a top-ported manifold, there will be no output from the A and B port.

Specific Product Precautions 3

Be sure to read this before handling the products. Refer to the back cover for safety instructions. For 3/4/5-port solenoid valve precautions, refer to the "Handling Precautions for SMC Products" and the "Operation Manual" on the SMC website: https://www.smcworld.com

Light/Surge Voltage Suppressor

⚠Caution

■ Polar type

Positive common

Single solenoid

Light/surge voltage suppressor (□Z)

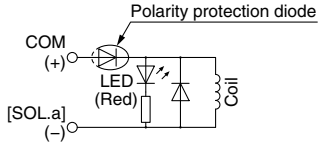

Surge voltage suppressor (□S)

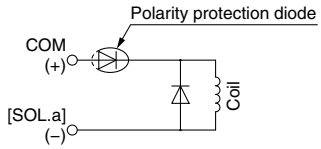

Negative common

Single solenoid

Light/surge voltage suppressor (□NZ)

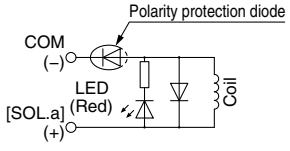

Surge voltage suppressor (□NS)

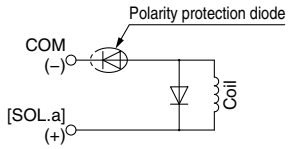

Positive common

Double solenoid, 3-position, 4-position

Light/surge voltage suppressor (□Z)

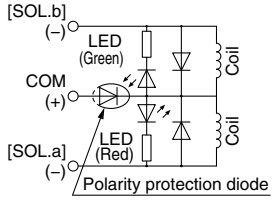

Surge voltage suppressor (□S)

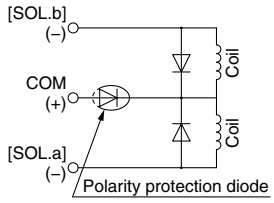

Negative common

Double solenoid, 3-position, 4-position

Light/surge voltage suppressor (□NZ)

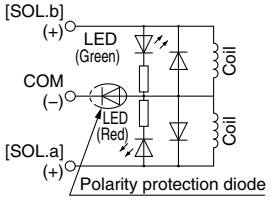

Surge voltage suppressor (□NS)

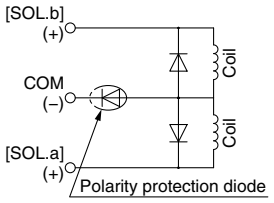

■ Non-polar type

With surge voltage suppressor (□R)

Single solenoid

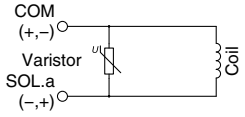

Double solenoid

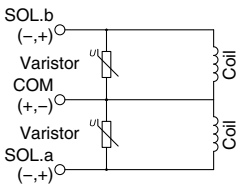

With light/surge voltage suppressor (□U)

Single solenoid

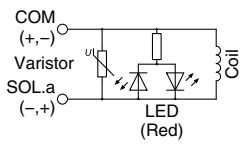

Double solenoid

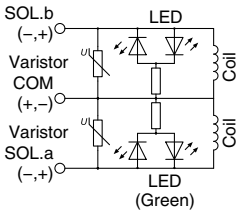

■ With power saving circuit

Power consumption is decreased to approx. 1/3 compared with the standard product by reducing the wattage required to hold the valve in an energized state. (Effective energizing time is over 67 ms at 24 VDC.)

* Be careful of the energizing time, as quick response and high pressure types will become operational when the energizing time is over 40 ms.

<Standard>

Electric circuit diagram
(With power saving circuit)
In the case of single solenoid

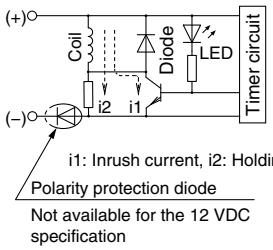

<High pressure>

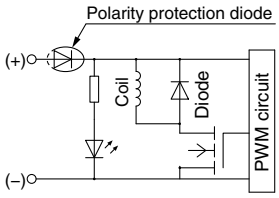

The circuit shown above reduces the power consumption for holding in order to save energy. Refer to the electrical power waveform as shown below.

<Electrical power waveform with power saving circuit>

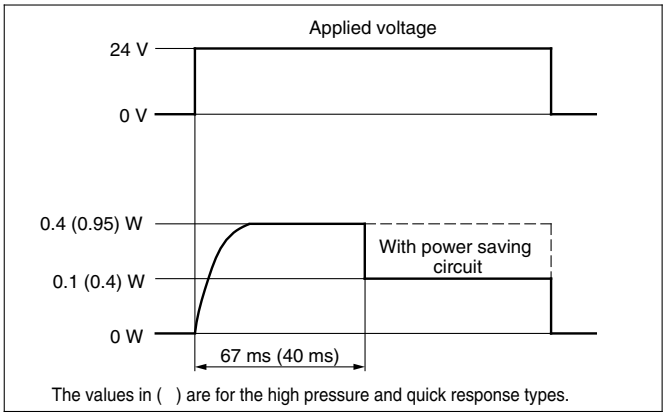

- The 12 VDC specification with power saving circuit (standard specification) does not have the polarity protection diode. Do not make a mistake with the polarity.
- Since the voltage will drop by approx. 0.5 V due to the transistor, pay attention to the allowable voltage fluctuation. (For details, refer to the solenoid specifications of each type of valve.)

Residual voltage of the surge voltage suppressor

* If a varistor or diode surge voltage suppressor is used, there is some residual voltage to the protection element and rated voltage. Therefore, refer to the table below and pay attention to the surge voltage protection on the controller side. Also, since the response time does change, refer to the valve specifications on page 16.

Residual Voltage

Surge voltage suppressor	DC	
	24 V	12 V
S, Z	Approx. 1 V	
R, U	Approx. 47 V	Approx. 32 V

SY3000/5000/7000 Series
Specific Product Precautions 4

Be sure to read this before handling the products. Refer to the back cover for safety instructions. For 3/4/5-port solenoid valve precautions, refer to the "Handling Precautions for SMC Products" and the "Operation Manual" on the SMC website: https://www.smcworld.com

Continuous Duty

⚠Caution

If a valve is energized continuously for long periods of time, the rise in temperature due to heat-up of the coil assembly may cause a decline in solenoid valve performance, reduce service life, or have adverse effects on peripheral equipment. If the valve is energized continuously for long periods of time, be sure to use a valve with power saving circuit. In particular, if three or more adjacent stations on the manifold are energized simultaneously for extended periods of time or if the valves on A side and B side are energized simultaneously for long periods of time, take special care as the temperature rise will be greater.

UL Approved Product

⚠Caution

When conformity to UL is required, the product should be used with a UL1310 Class 2 power supply.

The product is a UL approved product only if it has a c UL us mark on the body.

Countermeasure for Surge Voltage Intrusion

■ Surge voltage intrusion

With non-polar type valves, at times of sudden interruption of the loading power supply, such as emergency shutdown, surge voltage intrusion may be generated from loading equipment with a large capacity (power consumption), and a valve in a de-energized state may switch over (see Figure 1).
When installing a breaker circuit for the loading power supply, consider using a valve with polarity (with polarity protection diode), or install a surge absorption diode between the loading equipment COM line and the output equipment COM line (see Figure 2).

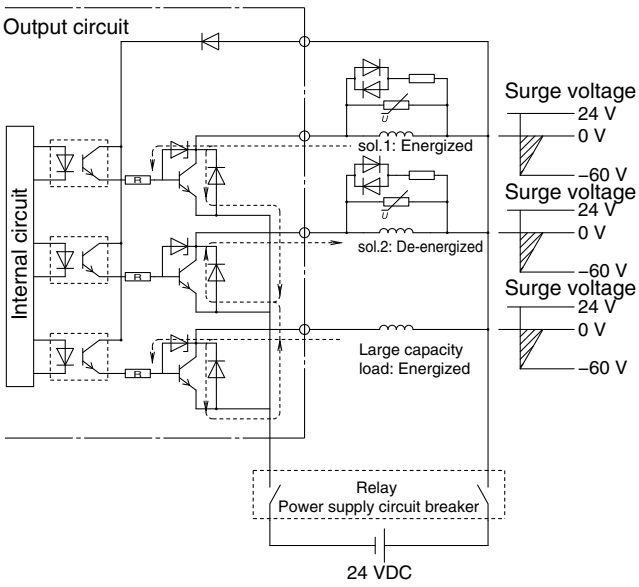

Figure 1. Surge intrusion circuit example (NPN outlet example) (24 VDC)

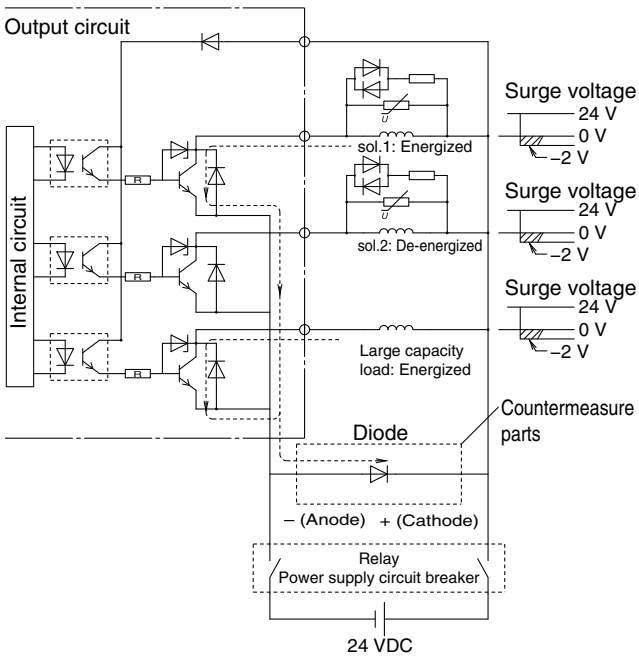

Figure 2. Surge intrusion countermeasure example (NPN outlet example) (24 VDC)

Specific Product Precautions 5

Be sure to read this before handling the products. Refer to the back cover for safety instructions. For 3/4/5-port solenoid valve precautions, refer to the "Handling Precautions for SMC Products" and the "Operation Manual" on the SMC website: https://www.smcworld.com

Light Indication

When equipped with indicator light and surge voltage suppressor, the light window turns red when solenoid a is energized, and it turns green when solenoid b is energized.

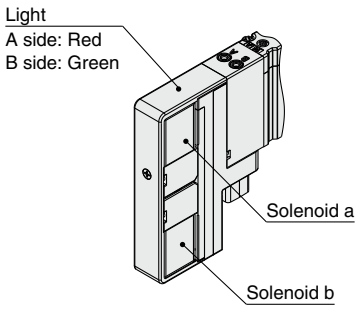

Type 5□ (Metal Base), Type 1□ (Connector Connecting Base) Changing Connector Entry Direction

⚠Caution

Connector direction for electrical entry of D-sub connector <IP40> and flat ribbon cable can be changed. If the directional change is required, slide the lever on the side of the connector block to the FREE position, and then change the direction as shown in the figure. Also, before connecting the connector, be sure to return the lever to the LOCK position. (If the lever is difficult to slide, move the connector a little bit to make it easier to slide the lever.)

If an excessive force is applied on the connector in the LOCK position, the connector block may be damaged. Also, using in such a way that the connector floats in the FREE position, it may cause the lead wire, etc., to break. Thus, refrain from using in these ways.

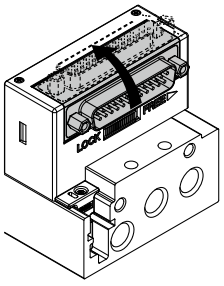

Type 5□
(Metal base)

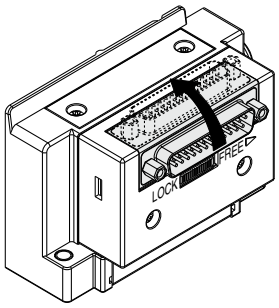

Type 1□
(Connector connecting base)

Manifold Indication Symbol

⚠Caution

The letter "S" is indicated on manifold blocks for the SY series Type 1□ (connector connecting base) as shown below. This indication refers to the type of substrate assembly (single wiring) inside the manifold blocks. When there is no symbol, double wiring is used.

When the manifold specification sheet does not include a wiring specification, all stations will be double wiring specification. In this case, single and double solenoid valves can be mounted in any position, but when a single valve is used, there will be an unused control signal. To avoid this, indicate positions of manifold blocks for single wiring specification and double wiring specification on a manifold specification sheet. (Note that double, 3-, or 4-position valves cannot be used for manifolds blocks with single wiring specification S.)

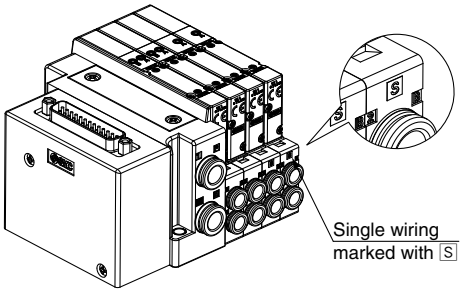

SY3000/5000/7000 Series
Specific Product Precautions 6

Be sure to read this before handling the products. Refer to the back cover for safety instructions. For 3/4/5-port solenoid valve precautions, refer to the "Handling Precautions for SMC Products" and the "Operation Manual" on the SMC website: https://www.smcworld.com

Substrate Assemblies inside Manifolds

⚠Caution

Substrate assemblies inside of manifolds cannot be taken apart. Attempting to do so may damage parts.

Fixation of DIN Rail Mounting Type Manifolds

⚠Caution

1. When the manifold is fixed with bolts on a mounting surface, etc., it can be operated just by fixing on both ends of the DIN rail if the bottom surface of the DIN rail is entirely in contact with the mounting surface when mounted horizontally. However, if it is used with other mounting or with side or reverse mounting, fix the DIN rail with bolts at regular intervals. As a guide, insert bolts in 2 locations for 2-5 stations, 3 locations for 6-10 stations, 4 locations for 11-15 stations, 5 locations for 16-20 stations, and 6 locations for 21-24 stations.
2. When using the manifold with DIN rail in an environment where any vibration or impact is applied to it, the DIN rail itself may be broken. In particular, if the installation surface vibrates when mounting the manifold on the wall or if a load is directly applied to the manifold, the DIN rail may be broken, causing the manifold to drop. When any vibration, impact, or load is applied to the manifold, be sure to use the direct mounting manifold.

Port Block Assembly and How to Change Piping Types between Top and Side

⚠Caution

For the top-ported type, the port size of A and B ports can be changed by switching the port block assemblies which are mounted on the body. The piping method can also be changed by switching the top-ported type port block assembly with the side-ported type cover assembly. Also, it may cause air leakage if the mounting screws are not tightened securely enough when they are switched. Take care to tighten to the correct tightening torque.
Refer to pages 22 and 23 for part numbers of port block assembly and body cover assembly for A, B port and page 201 for part numbers of port block assembly and body cover assembly for P, E port.
When switching them while valves are mounted on a manifold, remove the clip with a flat head screwdriver before switching the port plugs and the One-touch fittings. It may cause air leakage if the mounting screws are not tightened or the clip is not inserted securely enough when they are switched. Take care to tighten to the correct tightening torque.

⚠Caution

Tightening torque

M2: 0.16 N·m (SY3000)
M3: 0.8 N·m (SY5000/7000)

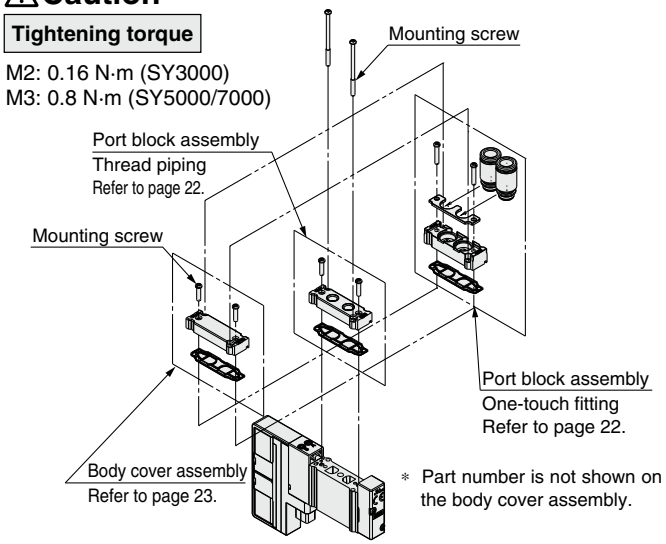

■ How to change while mounted on a manifold

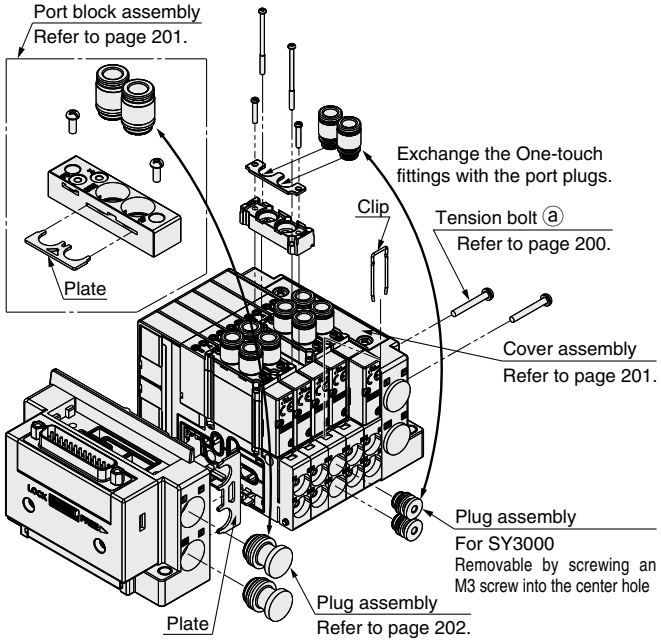

Specific Product Precautions 7

Be sure to read this before handling the products. Refer to the back cover for safety instructions. For 3/4/5-port solenoid valve precautions, refer to the "Handling Precautions for SMC Products" and the "Operation Manual" on the SMC website: https://www.smcworld.com

How to Replace One-touch Fittings

⚠Caution

By replacing One-touch fittings of valve or manifold base, it is possible to change the connection diameter of the 4(A), 2(B), 1(P), 3/5(E) ports.
When replacing the One-touch fittings, remove the clip or the plate and the plate mounting screws with a screwdriver before pulling the One-touch fittings off. Mount the One-touch fittings by following the removal procedure in reverse.
It may cause air leakage if the mounting screws are not tightened or the clip and the clip plate are not inserted securely enough when they are switched. Take care to tighten to the correct tightening torque. Refer to page 202 for part numbers of One-touch fittings for valve or manifold.

■ Valve

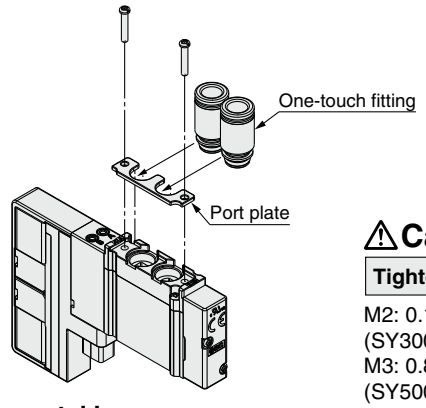

⚠Caution

Tightening torque

M2: 0.16 N·m
(SY3000)
M3: 0.8 N·m
(SY5000/7000)

■ Plug-in metal base

•Side ported (Type 50)

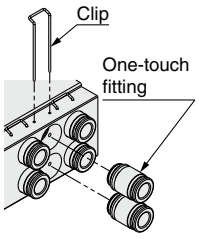

•Bottom ported (Type 51)

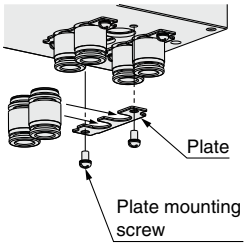

Clip part nos. (10 pcs. included)

Series	Part no.
SY3000	SY30M-19-2A
SY5000	SY50M-19-2A
SY7000	SY70M-19-2A

Plate assembly part nos. (10 pcs. included)

Series	Part no.
SY3000	SY30M-10-3A
SY5000	SY50M-10-6A
SY7000	SY70M-10-7A

∗ Including mounting screw

■ Plug-in connector connecting base

•Side ported (Type 10)

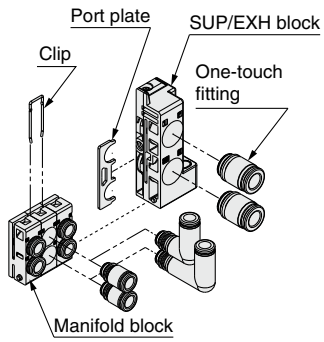

Clip part nos. (10 pcs. included)

Series	A, B port size	Part no.
SY3000	—	SY30M-19-1A
SY5000	—	SY50M-19-6A
SY7000	—	SV3000-70-1A
SY3000/5000 Mixed mounting type (For mounting the SY3000)∗1	ø2, ø3, ø4 ø6, ø1/8" ø5/32", ø1/4"	SY50M-19-1A
	ø8, ø5/16"	SY50M-19-6A

∗1 The part number for mounting the SY5000 is SY50M-19-6A.
∗ The part number for the SY5000/7000 mixed mounting type is SV3000-70-1A.
∗ If the port plate for the SUP/EXH block is required, please contact SMC.

How to Replace One-touch Fittings

⚠Caution

•Bottom ported (Type 11)

Secure enough space between the manifold blocks when the plate is detached and attached.

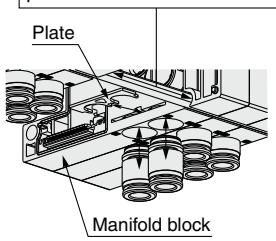

Plate part nos. (10 pcs. included)

Series	A, B port size	Part no.
SY5000	—	SY50M-10-4A
SY7000	—	SY70M-10-4A
SY3000/5000 Mixed mounting type (For mounting the SY3000)∗1	ø2, ø3, ø4 ø6, ø1/8" ø5/32", ø1/4"	SY50M-10-5A
	ø8, ø5/16"	SY50M-10-4A

∗1 The part number for mounting the SY5000 is SY50M-10-4A.
∗ The part number for the SY5000/7000 mixed mounting type is SY70M-10-4A.

Other Tube Brands

⚠Caution

1. When using other than SMC brand tube, confirm that the following specifications are satisfied with respect to the tube outside diameter tolerance.

1) Nylon tube within ±0.1 mm
2) Soft nylon tube within ±0.1 mm
3) Polyurethane tube within +0.15 mm
–0.2 mm

Do not use tube which do not meet these outside diameter tolerances. It may not be possible to connect them, or they may cause other trouble, such as air leakage or the tube pulling out after connection.

One-touch Fittings

■ Tube attachment/detachment for One-touch fittings

1) Tube attachment

1. Take a tube having no flaws on its periphery and cut it off at a right angle. When cutting the tube, use tube cutters TK-1, 2, or 3. Do not use pliers, nippers, scissors, etc. If cutting is done with tools other than tube cutters, the tube may be cut diagonally or become flattened, etc., making a secure installation impossible, and causing problems such as the tube pulling out after installation or air leakage. Allow some extra length in the tube.
2. Grasp the tube and push it in slowly, inserting it securely all the way into the fitting.
3. After inserting the tube, pull on it lightly to confirm that it will not come out. If it is not installed securely all the way into the fitting, this can cause problems such as air leakage or the tube pulling out.

2) Tube detachment

1. Push in the release button sufficiently, pushing its collar equally around the circumference.
2. Pull out the tube while holding down the release button so that it does not come out. If the release button is not pressed down sufficiently, there will be increased bite on the tube and it will become more difficult to pull it out.
3. When the removed tube is to be used again, cut off the portion which has been chewed before reusing it. If the chewed portion of the tube is used as is, this can cause trouble such as air leakage or difficulty in removing the tube.

SY3000/5000/7000 Series
Specific Product Precautions 8

Be sure to read this before handling the products. Refer to the back cover for safety instructions. For 3/4/5-port solenoid valve precautions, refer to the "Handling Precautions for SMC Products" and the "Operation Manual" on the SMC website: https://www.smcworld.com

One-touch Fittings

⚠Caution

When fittings are used, they may interfere with one another depending on their types and sizes. Therefore, the dimensions of the fittings to be used should first be confirmed in their respective catalogs.
Fittings whose compliance with the SY series is already confirmed are stated below. If the fitting within the applicable range is selected, there will not be any interference.

Applicable Fittings: KQ2H, KQ2S Series

Series	Model	Piping port	Port size	Fittings	Applicable tubing O.D.						
					ø2	ø3.2	ø4	ø6	ø8	ø10	ø12
SY3000	SY3□30-□□-M5	4A, 2B	M5	KQ2H	●	●					
				KQ2S		●	●	●			
	SS5Y3-50/51/52 (R) Manifold base	1P, 5EA, 3EB	1/8	KQ2H		●	●	●	●	●	●
				KQ2S			●	●	●	●	●
		X, PE	M5	KQ2H	●	●					
				KQ2S		●	●	●			
		4A, 2B	1/8	KQ2H		●	●	●	●	●	●
				KQ2S			●	●	●		
			M5	KQ2H	●	●					
				KQ2S		●	●	●			

Series	Model	Piping port	Port size	Fittings	Applicable tubing O.D.						
					ø2	ø3.2	ø4	ø6	ø8	ø10	ø12
SY5000	SY5□30-□□-01	4A, 2B	1/8	KQ2H		●	●	●			
				KQ2S			●	●	●		
	SS5Y5-50/51/52 (R) Manifold base	1P, 5EA, 3EB	1/4	KQ2H		●	●	●	●	●	●
				KQ2S				●	●	●	●
		X, PE	M5	KQ2H	●	●	●	●			
				KQ2S		●	●	●			
		4A, 2B	1/4	KQ2H		●	●	●	●	●	
				KQ2S			●	●	●	●	●
			1/8	KQ2H		●	●	●			
				KQ2S			●	●	●		

Series	Model	Piping port	Port size	Fittings	Applicable tubing O.D.						
					ø2	ø3.2	ø4	ø6	ø8	ø10	ø12
SY7000	SY7□30-□□-02	4A, 2B	1/4	KQ2H		●	●	●	●	●	
				KQ2S				●	●	●	●
	SS5Y7-50/51/52 (R) Manifold base	1P, 5EA, 3EB	3/8	KQ2H				●	●	●	●
				KQ2S					●	●	●
		X, PE	M5	KQ2H	●	●	●	●			
				KQ2S		●	●	●			
		4A, 2B	1/4	KQ2H		●	●	●	●	●	
				KQ2S				●	●	●	●

■ **Trademark**

DeviceNet® is a registered trademark of ODVA, Inc.
EtherNet/IP® is a registered trademark of ODVA, Inc.
CompoNet® is a registered trademark of ODVA, Inc.
EtherCAT® is registered trademark and patented technology, licensed by Beckhoff Automation GmbH, Germany.

Model Index (Alphanumeric Order)

SS5Y□-10	SY Type 10/Side Ported Plug-in Connector Connecting Base: D-sub Connector, Flat Ribbon Cable	**p. 41**
SS5Y□-10L	SY Type 10/Side Ported Plug-in Connector Connecting Base: Lead Wire	**p. 77**
SS5Y□-10M	SY Type 10/Side Ported Plug-in Connector Connecting Base: Circular Connector	**p. 87**
SS5Y□-10S	SY Type 10/Side Ported Plug-in Connector Connecting Base: EX500 Gateway Decentralized System 2 (128 Points)	**p. 97**
SS5Y□-10S	SY Type 10/Side Ported Plug-in Connector Connecting Base: EX500 Gateway Decentralized System (64 Points)	**p. 103**
SS5Y□-10S□	SY Type 10/Side Ported Plug-in Connector Connecting Base: EX245	**p. 124-1**
SS5Y□-10S□	SY Type 10/Side Ported Plug-in Connector Connecting Base: EX250	**p. 125**
SS5Y□-10S□	SY Type 10/Side Ported Plug-in Connector Connecting Base: EX260	**p. 133**
SS5Y□-10S3	SY Type 10/Side Ported Plug-in Connector Connecting Base: EX120	**p. 149**
SS5Y□-10S4	SY Type 10/Side Ported Plug-in Connector Connecting Base: EX126	**p. 141**
SS5Y□-10S6	SY Type 10/Side Ported Plug-in Connector Connecting Base: EX600	**p. 113**
SS5Y□-10T	SY Type 10/Side Ported Plug-in Connector Connecting Base: Terminal Block Box	**p. 67**
SS5Y□-10TC	SY Type 10/Side Ported Plug-in Connector Connecting Base: Terminal Block Box (Spring Type)	**p. 59**
SS5Y□-11	SY Type 11/Bottom Ported Plug-in Connector Connecting Base: D-sub Connector, Flat Ribbon Cable	**p. 41**
SS5Y□-11L	SY Type 11/Bottom Ported Plug-in Connector Connecting Base: Lead Wire	**p. 77**
SS5Y□-11M	SY Type 11/Bottom Ported Plug-in Connector Connecting Base: Circular Connector	**p. 87**
SS5Y□-11S	SY Type 11/Bottom Ported Plug-in Connector Connecting Base: EX500 Gateway Decentralized System 2 (128 Points)	**p. 97**
SS5Y□-11S	SY Type 11/Bottom Ported Plug-in Connector Connecting Base: EX500 Gateway Decentralized System (64 Points)	**p. 103**
SS5Y□-11S□	SY Type 11/Bottom Ported Plug-in Connector Connecting Base: EX245	**p. 124-1**
SS5Y□-11S□	SY Type 11/Bottom Ported Plug-in Connector Connecting Base: EX250	**p. 125**
SS5Y□-11S□	SY Type 11/Bottom Ported Plug-in Connector Connecting Base: EX260	**p. 133**
SS5Y□-11S3	SY Type 11/Bottom Ported Plug-in Connector Connecting Base: EX120	**p. 149**
SS5Y□-11S4	SY Type 11/Bottom Ported Plug-in Connector Connecting Base: EX126	**p. 141**
SS5Y□-11S6	SY Type 11/Bottom Ported Plug-in Connector Connecting Base: EX600	**p. 113**
SS5Y□-11T	SY Type 11/Bottom Ported Plug-in Connector Connecting Base: Terminal Block Box	**p. 67**
SS5Y□-11TC	SY Type 11/Bottom Ported Plug-in Connector Connecting Base: Terminal Block Box (Spring Type)	**p. 59**
SS5Y□-12	SY Type 12/Top Ported Plug-in Connector Connecting Base: D-sub Connector, Flat Ribbon Cable	**p. 53**
SS5Y□-12L	SY Type 12/Top Ported Plug-in Connector Connecting Base: Lead Wire	**p. 83**
SS5Y□-12M	SY Type 12/Top Ported Plug-in Connector Connecting Base: Circular Connector	**p. 93**
SS5Y□-12S	SY Type 12/Top Ported Plug-in Connector Connecting Base: EX500 Gateway Decentralized System 2 (128 Points)	**p. 109**
SS5Y□-12S	SY Type 12/Top Ported Plug-in Connector Connecting Base: EX500 Gateway Decentralized System (64 Points)	**p. 111**
SS5Y□-12S□	SY Type 12/Top Ported Plug-in Connector Connecting Base: EX245	**p. 124-5**
SS5Y□-12S□	SY Type 12/Top Ported Plug-in Connector Connecting Base: EX250	**p. 131**
SS5Y□-12S□	SY Type 12/Top Ported Plug-in Connector Connecting Base: EX260	**p. 139**
SS5Y□-12S3	SY Type 12/Top Ported Plug-in Connector Connecting Base: EX120	**p. 155**
SS5Y□-12S4	SY Type 12/Top Ported Plug-in Connector Connecting Base: EX126	**p. 147**
SS5Y□-12S6	SY Type 12/Top Ported Plug-in Connector Connecting Base: EX600	**p. 123**
SS5Y□-12T	SY Type 12/Top Ported Plug-in Connector Connecting Base: Terminal Block Box	**p. 73**
SS5Y□-12TC	SY Type 12/Top Ported Plug-in Connector Connecting Base: Terminal Block Box (Spring Type)	**p. 64**
SS5Y□-50	SY Type 50/Side Ported Plug-in Metal Base: D-sub Connector, Flat Ribbon Cable	**p. 223**
SS5Y□-50S5	SY Type 50/Side Ported Plug-in Metal Base: EX510	**p. 251**
SS5Y□-51	SY Type 51/Bottom Ported Plug-in Metal Base: D-sub Connector, Flat Ribbon Cable	**p. 223**
SS5Y□-51S5	SY Type 51/Bottom Ported Plug-in Metal Base: EX510	**p. 251**
SS5Y□-52	SY Type 52/Top Ported Plug-in Metal Base: D-sub Connector, Flat Ribbon Cable	**p. 243**
SS5Y□-52S5	SY Type 52/Top Ported Plug-in Metal Base: EX510	**p. 261**
SS5Y5-M10	SY3000/5000 Type 10/Side Ported Plug-in Mixed Mounting Type Manifold	**p. 165**
SS5Y5-M11	SY3000/5000 Type 11/Bottom Ported Plug-in Mixed Mounting Type Manifold	**p. 165**
SS5Y5-M12	SY Type 12/Top Ported Plug-in Mixed Mounting Type Manifold	**p. 177**
SS5Y7-M10	SY5000/7000 Type 10/Side Ported Plug-in Mixed Mounting Type Manifold	**p. 169**
SS5Y7-M11	SY5000/7000 Type 11/Bottom Ported Plug-in Mixed Mounting Type Manifold	**p. 169**
SS5Y7-M12	SY Type 12/Top Ported Plug-in Mixed Mounting Type Manifold	**p. 177**
SY3000	Plug-in Single Unit/Sub-plate Type [IP67 Compliant]	**p. 282**
SY3A□R	SY3000 Vacuum Release Valve with Restrictor (Only for External Pilot)	**p. 26**
SY5□3□-□1-C6	SY5000 Valve with Pressure Sensor	**p. 32**
SY5000	Plug-in Single Unit/Sub-plate Type [IP67 Compliant]	**p. 282**
SY530-□1-E	SY5000 With Residual Pressure Release Valve	**p. 24**
SY5A□R	SY5000 Vacuum Release Valve with Restrictor (Only for External Pilot)	**p. 26**
SY7□3□-□1-C6	SY7000 Valve with Pressure Sensor	**p. 32**
SY7000	Plug-in Single Unit/Sub-plate Type [IP67 Compliant]	**p. 282**
SY730-□1-E	SY7000 With Residual Pressure Release Valve	**p. 24**

Revision History

Edition B
* The EX260 integrated type (for output) serial transmission system has been added.
* EtherNet/IP™ and EtherCAT have been added to the EX600 integrated type (for input/output) serial transmission system (Fieldbus system).
* Additional options:
  · Interface regulator assembly · Dual flow fitting
  · Individual SUP block assembly · Name plate for manifolds
  · Individual EXH block assembly
* The part numbers for mixed port sizes of the A and B ports have been changed for type 10 (side ported), type 11 (bottom ported), and type 12 (top ported) plug-in connector connecting bases.
* The mixed specification of A and B port piping has been deleted from the type 12 (top ported) plug-in connector connecting base.
* Number of pages has been increased from 148 to 164. PY

Edition C
* The SY7000 has been added.
* A plug-in sub-plate (SY3000/5000) has been added.
* A valve with a residual pressure release valve (SY5000) has been added.
* A solenoid valve with a safety slide locking manual override has been added.
* A D-sub connector (IP67) manifold has been added.
* A PC wiring manifold (with power supply terminal) has been added.
* Number of pages has been increased from 164 to 260. SO

Edition D
* A vacuum release valve with a restrictor has been added.
* A dual port EX600 EtherNet/IP™ product has been added.
* Products for the EX500 gateway decentralized system 2 have been added.
* A SUP stop valve spacer (with a residual pressure release valve) has been added.
* A valve with a residual pressure release valve (SY7000) has been added.
* Number of pages has been increased from 260 to 276. UQ

Edition E
* Flow rate characteristics (for the connector connecting base/manifold options) have been added.
* A wireless system (EX600-W) has been added.
* A valve with a 4(A)/2(B) port pressure sensor has been added.
* A blanking plate with output has been added.
* PC wiring has been deleted from the wiring types.
* CC-Link has been deleted from the EX250 series.
* The main/pilot valve common exhaust (-X16) option has been deleted from the made-to-order specifications.
* The order of the catalog contents has been revised.
* Number of pages has been increased from 276 to 304. YU

⚠ Safety Instructions

These safety instructions are intended to prevent hazardous situations and/or equipment damage. These instructions indicate the level of potential hazard with the labels of **"Caution," "Warning"** or **"Danger."** They are all important notes for safety and must be followed in addition to International Standards (ISO/IEC)*1), and other safety regulations.

⚠ Caution: **Caution** indicates a hazard with a low level of risk which, if not avoided, could result in minor or moderate injury.

⚠ Warning: **Warning** indicates a hazard with a medium level of risk which, if not avoided, could result in death or serious injury.

⚠ Danger : **Danger** indicates a hazard with a high level of risk which, if not avoided, will result in death or serious injury.

*1) ISO 4414: Pneumatic fluid power – General rules relating to systems.
ISO 4413: Hydraulic fluid power – General rules relating to systems.
IEC 60204-1: Safety of machinery – Electrical equipment of machines.
(Part 1: General requirements)
ISO 10218-1: Manipulating industrial robots – Safety.
etc.

⚠ Warning

1. The compatibility of the product is the responsibility of the person who designs the equipment or decides its specifications.

Since the product specified here is used under various operating conditions, its compatibility with specific equipment must be decided by the person who designs the equipment or decides its specifications based on necessary analysis and test results. The expected performance and safety assurance of the equipment will be the responsibility of the person who has determined its compatibility with the product. This person should also continuously review all specifications of the product referring to its latest catalog information, with a view to giving due consideration to any possibility of equipment failure when configuring the equipment.

2. Only personnel with appropriate training should operate machinery and equipment.

The product specified here may become unsafe if handled incorrectly. The assembly, operation and maintenance of machines or equipment including our products must be performed by an operator who is appropriately trained and experienced.

3. Do not service or attempt to remove product and machinery/ equipment until safety is confirmed.

1. The inspection and maintenance of machinery/equipment should only be performed after measures to prevent falling or runaway of the driven objects have been confirmed.
2. When the product is to be removed, confirm that the safety measures as mentioned above are implemented and the power from any appropriate source is cut, and read and understand the specific product precautions of all relevant products carefully.
3. Before machinery/equipment is restarted, take measures to prevent unexpected operation and malfunction.

4. Contact SMC beforehand and take special consideration of safety measures if the product is to be used in any of the following conditions.

1. Conditions and environments outside of the given specifications, or use outdoors or in a place exposed to direct sunlight.
2. Installation on equipment in conjunction with atomic energy, railways, air navigation, space, shipping, vehicles, military, medical treatment, combustion and recreation, or equipment in contact with food and beverages, emergency stop circuits, clutch and brake circuits in press applications, safety equipment or other applications unsuitable for the standard specifications described in the product catalog.
3. An application which could have negative effects on people, property, or animals requiring special safety analysis.
4. Use in an interlock circuit, which requires the provision of double interlock for possible failure by using a mechanical protective function, and periodical checks to confirm proper operation.

⚠ Caution

1. The product is provided for use in manufacturing industries.

The product herein described is basically provided for peaceful use in manufacturing industries.
If considering using the product in other industries, consult SMC beforehand and exchange specifications or a contract if necessary.
If anything is unclear, contact your nearest sales branch.

Limited warranty and Disclaimer/ Compliance Requirements

The product used is subject to the following "Limited warranty and Disclaimer" and "Compliance Requirements".
Read and accept them before using the product.

Limited warranty and Disclaimer

1. The warranty period of the product is 1 year in service or 1.5 years after the product is delivered, whichever is first.*2)
   Also, the product may have specified durability, running distance or replacement parts. Please consult your nearest sales branch.
2. For any failure or damage reported within the warranty period which is clearly our responsibility, a replacement product or necessary parts will be provided.
   This limited warranty applies only to our product independently, and not to any other damage incurred due to the failure of the product.
3. Prior to using SMC products, please read and understand the warranty terms and disclaimers noted in the specified catalog for the particular products.

*2) **Vacuum pads are excluded from this 1 year warranty.**
A vacuum pad is a consumable part, so it is warranted for a year after it is delivered.
Also, even within the warranty period, the wear of a product due to the use of the vacuum pad or failure due to the deterioration of rubber material are not covered by the limited warranty.

Compliance Requirements

1. The use of SMC products with production equipment for the manufacture of weapons of mass destruction (WMD) or any other weapon is strictly prohibited.
2. The exports of SMC products or technology from one country to another are governed by the relevant security laws and regulations of the countries involved in the transaction. Prior to the shipment of a SMC product to another country, assure that all local rules governing that export are known and followed.

⚠ Caution

SMC products are not intended for use as instruments for legal metrology.

Measurement instruments that SMC manufactures or sells have not been qualified by type approval tests relevant to the metrology (measurement) laws of each country. Therefore, SMC products cannot be used for business or certification ordained by the metrology (measurement) laws of each country.

Modular Connection Type
5-Port Solenoid Valve
Plug-in Type

CE UKCA c UL us
* Excludes the EX126 and EX120
RoHS

Can be connected to F.R.L. units

Flow rate characteristics
C [dm³/(s·bar)]
SY3000: 1.6*1
SY5000: 3.6*1

*1 4/2 ➡ 3/5 (A/B ➡ E)

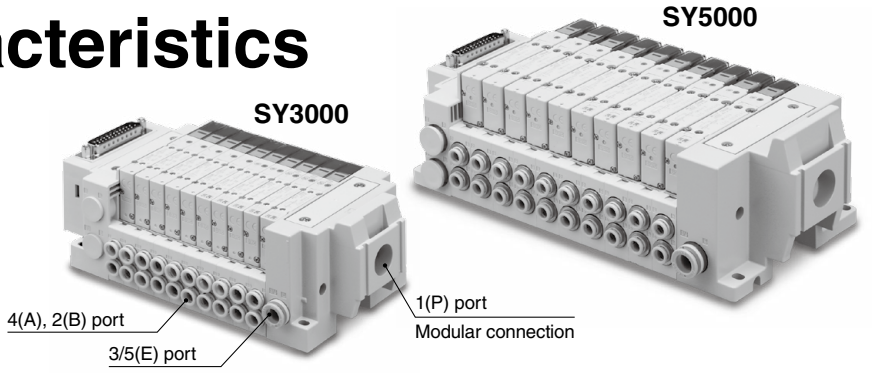

Allows for space saving and reduced piping labor.

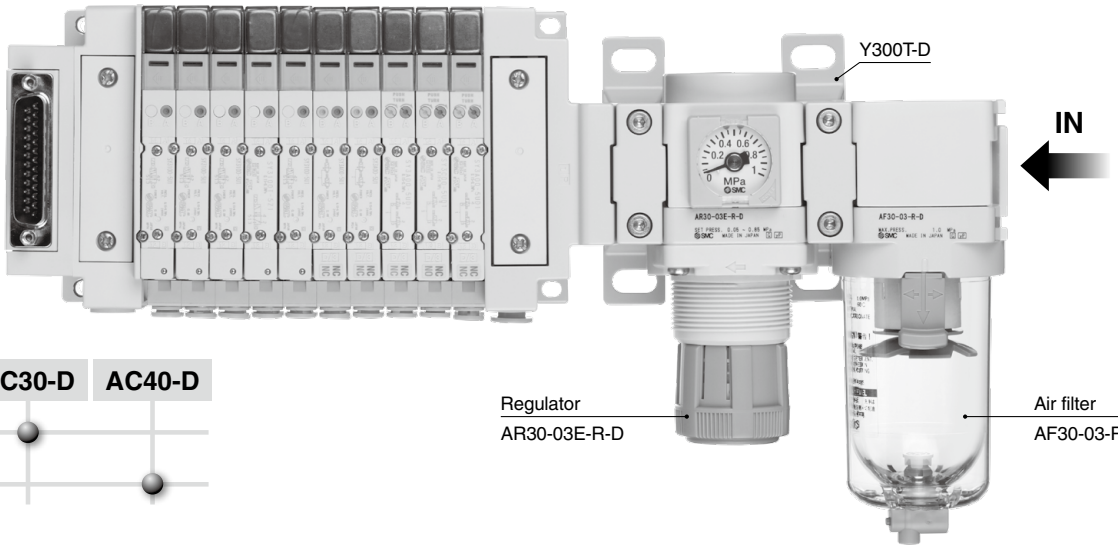

	AC30-D	AC40-D
SY3000	●	
SY5000		●

Simple Specials System

For modular connection units (shipped assembled), the simple specials system can be used.

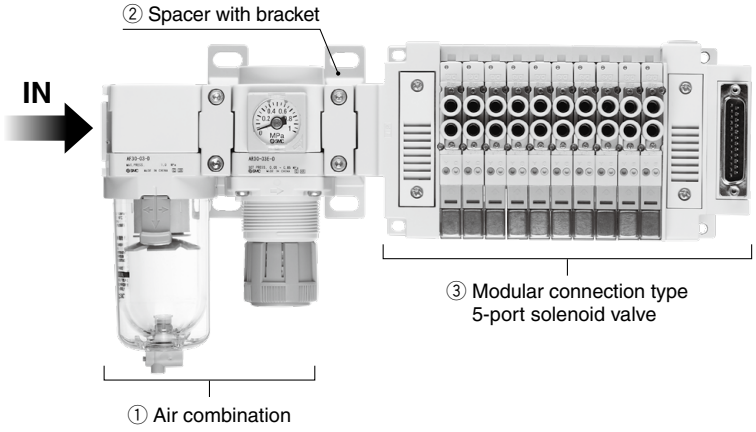

Ordering Example

* **Products do not come assembled. They should be ordered separately and assembled by the customer.**

① **Air combination AC30C-03E-D ····· 1 pc.**
② **Spacer with bracket Y300T-D ····· 1 pc.**
③ **Modular connection type/5-port solenoid valve**
SS5Y3-12F1-10U-X990 ····· 1 pc.
* **SY3230-51-C4 ····· 10 pcs.**

SY3000/5000-X990

SMC

Modular Connection Type

SY3000/5000-X990

Manifold Specifications/Weight

Manifold Specifications

Model			D-sub		Flat ribbon cable			Terminal block box (Spring type)	Terminal block box	Lead wire	Circular connector	Serial wiring			
			Type F	Type FW	Type P	Type PG	Type PH	Type TC	Type T	Type L	Type M	Type S6□ (EX600)	Type SA2 (EX500) Type S4□ (EX126)	Type SA3 (EX500) Type S□ (EX250) (EX260)	Type S3□ (EX120)
Valve stations			2 to 10 stations				2 to 8 stations	2 to 10 stations							
Port size	**1(P) port**	**SY3000**	Modular size: 30												
		SY5000	Modular size: 40												
Mounted valve			Only the rubber seal type is available.												

Manifold Weight

Valve Seal Type: Rubber Seal
Side Ported (Type 10)

Manifold model	Valve model	Weight: W [g]*1 (n: stations)
SS5Y3	**SY3100/SY3200**	28.9n + 433
	SY3300	
	SY3400	
	SY3500	
	SY3A00	
	SY3B00	
	SY3C00	
SS5Y5	**SY5100/SY5200**	74.7n + 698
	SY5300	
	SY5400	
	SY5500	
	SY5A00	
	SY5B00	
	SY5C00	

Valve Seal Type: Rubber Seal
Top Ported (Type 12)

Manifold model	Valve model	Weight: W [g]*1 (n: stations)
SS5Y3	**SY3130/SY3230**	25.1n + 465
SS5Y5	**SY5130/SY5230**	66.3n + 717

*1 Weight: W is the value of the internal pilot and D-sub connector manifold with One-touch fitting straight piping type.
To obtain the weight with valves attached, add the valve weights given in the **Web Catalog** for the appropriate number of stations.

* **The other specifications are the same as those of the standard model. For details, refer to the Web Catalog.**

How to Order Manifolds

Type 12 Top Ported SS5Y 3 – 12 □□ – 05 D S – N – X990

Type 10 Side Ported SS5Y 3 – 10 □□ – 05 D S – C6 – X990

∗ There is no bottom ported type.

❶ ❷

More information can be viewed here.

Enter the standard product number.
∗ The A and B ports are only compatible with straight unions.
∗ DIN rail mounting is not supported.

P-port modular connection type
SY3000 is 30.
SY5000 is 40.

❶ Series

		Modular size
3	SY3000	30
5	SY5000	40

❷ Valve stations

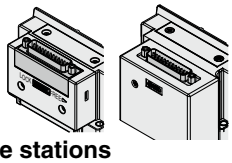

F/FW: D-sub connector (25 pins)

Symbol	Stations	Note
02	2 stations	Double wiring∗1
⋮	⋮	
10	10 stations	
02	2 stations	Specified layout∗2 (Up to 10 solenoids available)
⋮	⋮	
10	10 stations	

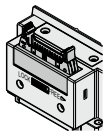

P: Flat ribbon cable (26 pins)

Symbol	Stations	Note
02	2 stations	Double wiring∗1
⋮	⋮	
10	10 stations	
02	2 stations	Specified layout∗2 (Up to 10 solenoids available)
⋮	⋮	
10	10 stations	

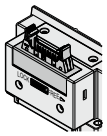

PG: Flat ribbon cable (20 pins)

Symbol	Stations	Note
02	2 stations	Double wiring∗1
⋮	⋮	
09	9 stations	
02	2 stations	Specified layout∗2 (Up to 10 solenoids available)
⋮	⋮	
10	10 stations	

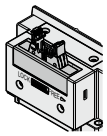

PH: Flat ribbon cable (10 pins)

Symbol	Stations	Note
02	2 stations	Double wiring∗1
⋮	⋮	
04	4 stations	
02	2 stations	Specified layout∗2 (Up to 8 solenoids available)
⋮	⋮	
08	8 stations	

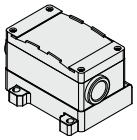

TC/T: Terminal block box

Symbol	Stations	Note
02	2 stations	Double wiring∗1
⋮	⋮	
10	10 stations	
02	2 stations	Specified layout∗2 (Up to 10 solenoids available)
⋮	⋮	
10	10 stations	

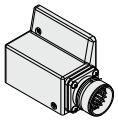

M: Circular connector

Symbol	Stations	Note
02	2 stations	Double wiring∗1
⋮	⋮	
8	8 stations	
02	2 stations	Specified layout∗2 (Up to 10 solenoids available)
⋮	⋮	
10	10 stations	

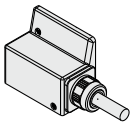

L1: Lead wire (0.6 m)

Symbol	Stations	Note
02	2 stations	Double wiring∗1
⋮	⋮	
10	10 stations	
02	2 stations	Specified layout∗2 (Up to 10 solenoids available)
⋮	⋮	
10	10 stations	

L2: Lead wire (1.5 m)

Symbol	Stations	Note
02	2 stations	Double wiring∗1
⋮	⋮	
08	8 stations	
02	2 stations	Specified layout∗2 (Up to 10 solenoids available)
⋮	⋮	
10	10 stations	

L3: Lead wire (3 m)

Symbol	Stations	Note
02	2 stations	Double wiring∗1
⋮	⋮	
04	4 stations	
02	2 stations	Specified layout∗2 (Up to 8 solenoids available)
⋮	⋮	
08	8 stations	

∗1 Double wiring: 2-position single, 2-position double, 3-position, and 4-position valves can be used on all manifold stations.
Use of a 2-position single solenoid will result in an unused control signal. If this is not desired, order with a specified layout.
∗2 Specified layout: Indicate the wiring specifications on the manifold specification sheet.
(Note that 2-position double, 3-position, and 4-position valves cannot be used where single wiring has been specified.)
∗ The blanking plate assembly is included in this number.

How to Order Manifolds

* Excludes the EX126 and EX120

EX500 128 Points: S□

EX500 64 Points: S□

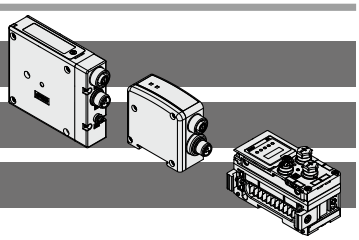

EX600: S6□□□

❷ Valve stations

Symbol	Stations	Note
02	2 stations	Double wiring*1
⋮	⋮	
10	10 stations	
02	2 stations	Specified layout*2 (Up to 10 solenoids available)
⋮	⋮	
10	10 stations	

*1 Double wiring: 2-position single, 2-position double, 3-position, and 4-position valves can be used on all manifold stations.
Use of a 2-position single solenoid will result in an unused control signal. If this is not desired, order with a specified layout.
*2 Specified layout: Indicate the wiring specifications on the manifold specification sheet.
(Note that 2-position double, 3-position, and 4-position valves cannot be used where single wiring has been specified.)
* The blanking plate assembly is included in this number.
* When the product without the SI unit (S0) is selected, note the maximum number of solenoids of the SI unit that will be mounted. If the layout is specified, indicate it on the manifold specification sheet. (Excludes the EX600)

EX250: S□□□

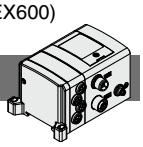

❷ Valve stations

Symbol	Stations	Note
02	2 stations	Double wiring*1
⋮	⋮	
10	10 stations	
02	2 stations	Specified layout*2 (Up to 10 solenoids available)
⋮	⋮	
10	10 stations	

*1 Double wiring: 2-position single, 2-position double, 3-position, and 4-position valves can be used on all manifold stations.
Use of a 2-position single solenoid will result in an unused control signal. If this is not desired, order with a specified layout.
*2 Specified layout: Indicate the wiring specifications on the manifold specification sheet.
(Note that 2-position double, 3-position, and 4-position valves cannot be used where single wiring has been specified.)
When determining the number of valve stations, note that the maximum number of solenoids for the AS-Interface applicable SI Unit specification is as follows.
·8 in/8 out specification: Max. 8 solenoids
·4 in/4 out specification: Max. 4 solenoids
* The blanking plate assembly is included in this number.
* For the product without the SI unit (S0), note the maximum number of solenoids of the SI unit that will be mounted. If the layout is specified, indicate it on the manifold specification sheet.

EX260: S□

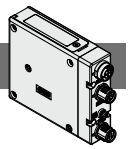

❷ Valve stations

In the case of the 32-output SI unit

Symbol	Stations	Note
02	2 stations	Double wiring*1
⋮	⋮	
10	10 stations	
02	2 stations	Specified layout*2 (Up to 10 solenoids available)
⋮	⋮	
10	10 stations	

In the case of the 16-output SI unit

Symbol	Stations	Note
02	2 stations	Double wiring*1
⋮	⋮	
08	8 stations	
02	2 stations	Specified layout*2 (Up to 10 solenoids available)
⋮	⋮	
10	10 stations	

*1 Double wiring: 2-position single, 2-position double, 3-position, and 4-position valves can be used on all manifold stations.
Use of a 2-position single solenoid will result in an unused control signal. If this is not desired, order with a specified layout.
*2 Specified layout: Indicate the wiring specifications on the manifold specification sheet.
(Note that 2-position double, 3-position, and 4-position valves cannot be used where single wiring has been specified.)
* The blanking plate assembly is included in this number.
* For the product without the SI unit (S0), note the maximum number of solenoids of the SI unit that will be mounted. If the layout is specified, indicate it on the manifold specification sheet.

EX126: S4□

EX120: S3□

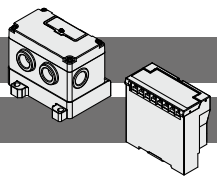

❷ Valve stations

Symbol	Stations	Note
02	2 stations	Double wiring*1
⋮	⋮	
08	8 stations	
02	2 stations	Specified layout*2 (Up to 10 solenoids available)
⋮	⋮	
10	10 stations	

*1 Double wiring: 2-position single, 2-position double, 3-position, and 4-position valves can be used on all manifold stations.
Use of a 2-position single solenoid will result in an unused control signal. If this is not desired, order with a specified layout.
*2 Specified layout: Indicate the wiring specifications on the manifold specification sheet.
(Note that 2-position double, 3-position, and 4-position valves cannot be used where single wiring has been specified.)
* The blanking plate assembly is included in this number.
* Since R2 type SI unit has 8 outputs, note that up to 8 solenoids can be accommodated. (For the EX120)

How to Order Equipped Valves (With mounting screw)

Base Mounted

Base mounted SY 3 1 0 0 □ □ □ □ - 5 □ □ 1 - □

∗ There are no metal seal types.

❶ ❷ ❻

Base mounted

Seal type: Rubber seal

Enter the standard product number.

More information can be viewed here.

❶ Series

3	SY3000
5	SY5000

❷ Type of actuation

1	2-position	Single
2		Double
3	3-position	Closed center
4		Exhaust center
5		Pressure center
A	4-position dual 3-port	N.C./N.C.
B		N.O./N.O.
C		N.C./N.O.

❻ Pilot valve option

Nil	Standard (0.7 MPa)
B	Quick response type (0.7 MPa)

Top Ported

Top ported SY 3 1 3 0 □ □ □ □ - 5 □ □ 1 - C6 □ - □

∗ There are no metal seal types.

❶ ❷ ❻

Top ported

Seal type: Rubber seal

Enter the standard product number.

More information can be viewed here.

❶ Series

3	SY3000
5	SY5000

❷ Type of actuation

1	2-position	Single
2		Double
3	3-position	Closed center
4		Exhaust center
5		Pressure center
A	4-position dual 3-port	N.C./N.C.
B		N.O./N.O.
C		N.C./N.O.

❻ Pilot valve option

Nil	Standard (0.7 MPa)
B	Quick response type (0.7 MPa)

Dimensions: SY3000 Series

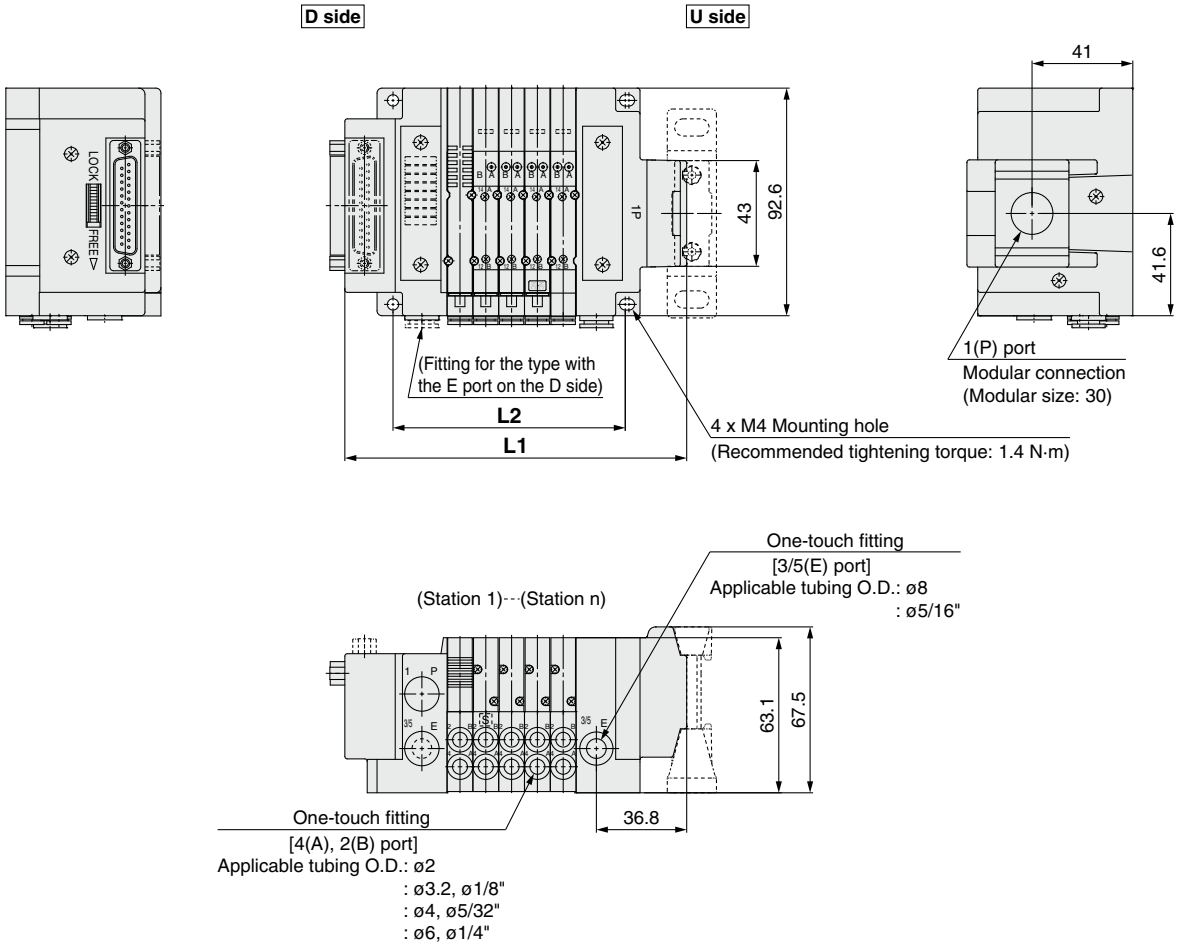

* These figures show the "SS5Y3-10F2-05U-C6-X990."
* The other dimensions, as well as those of the top ported type, are the same as those of the standard model. For details, refer to the **Web Catalog**.

D-sub, Flat Ribbon (Type F)

Refer to the table below for the L1 and L2 dimensions of the D-sub and flat ribbon (Type F).

L: Dimensions

n: Stations	2	3	4	5	6	7	8	9	10
L1	107.6	118.1	128.6	139.1	149.6	160.1	170.6	181.1	191.6
L2	63	73.5	84	94.5	105	115.5	126	136.5	147

IP67 D-sub (Type FW)

Refer to the table below for the L1 and L2 dimensions of the IP67 D-sub (Type FW).

L: Dimensions

n: Stations	2	3	4	5	6	7	8	9	10
L1	124.5	135	145.5	156	166.5	177	187.5	198	208.5
L2	63	73.5	84	94.5	105	115.5	126	136.5	147

Dimensions: SY3000 Series

Terminal Block Box (Type T)

Refer to the table below for the L1 and L2 dimensions of the terminal block box (Type T).

L: Dimensions

n: Stations	2	3	4	5	6	7	8	9	10
L1	183.3	193.8	204.3	214.8	225.3	235.8	246.3	256.8	267.3
L2	63	73.5	84	94.5	105	115.5	126	136.5	147

Terminal Block Box/Spring Type (Type TC)

Refer to the table below for the L1 and L2 dimensions of the terminal block box/spring type (Type TC).

L: Dimensions

n: Stations	2	3	4	5	6	7	8	9	10
L1	162	172.5	183	193.5	204	214.5	225	235.5	246
L2	63	73.5	84	94.5	105	115.5	126	136.5	147

Lead Wire (L), Circular Connector (M)

Refer to the table below for the L1 and L2 dimensions of the lead wire and circular connector.

L: Dimensions

n: Stations	2	3	4	5	6	7	8	9	10
L1	131	141.5	152	162.5	173	183.5	194	204.5	215
L2	63	73.5	84	94.5	105	115.5	126	136.5	147

EX500 (Type SA2)

Refer to the table below for the L1 and L2 dimensions of the EX500 (Type SA2).

L: Dimensions

n: Stations	2	3	4	5	6	7	8	9	10
L1	122.5	133	143.5	154	164.5	175	185.5	196	206.5
L2	63	73.5	84	94.5	105	115.5	126	136.5	147

EX500 (Type SA3)

Refer to the table below for the L1 and L2 dimensions of the EX500 (Type SA3).

L: Dimensions

n: Stations	2	3	4	5	6	7	8	9	10
L1	122.7	133.2	143.7	154.2	164.7	175.2	185.7	196.2	206.7
L2	63	73.5	84	94.5	105	115.5	126	136.5	147

EX600 (M12 Connector)

Calculate the L1 dimension of the EX600 (M12 connector) using the formula shown below.

L1 = 10.5 x n1 + 154.5 + 47 x n2
n1: Valve stations
n2: I/O unit stations

EX600 (7/8 Inch Connector)

Calculate the L1 dimension of the EX600 (7/8 inch connector) using the formula shown below.

L1 = 10.5 x n1 + 171 + 47 x n2
n1: Valve stations
n2: I/O unit stations

Dimensions: SY3000 Series

EX250

Calculate the L1 dimension of the EX250 using the formula shown below.

L1 = 10.5 x n1 + 154.5 + 21 x n2
n1: Valve stations
n2: I/O unit stations

EX260

Refer to the table below for the L1 and L2 dimensions of the EX260.

L: Dimensions

n: Stations	2	3	4	5	6	7	8	9	10
L1	122.7	133.2	143.7	154.2	164.7	175.2	185.7	196.2	206.7
L2	63	73.5	84	94.5	105	115.5	126	136.5	147

EX126

Refer to the table below for the L1 and L2 dimensions of the EX126.

L: Dimensions

n: Stations	2	3	4	5	6	7	8	9	10
L1	183.3	193.8	204.3	214.8	225.3	235.8	246.8	256.8	267.3
L2	63	73.5	84	94.5	105	115.5	126	136.5	147

EX120

Refer to the table below for the L1 and L2 dimensions of the EX120.

L: Dimensions

n: Stations	2	3	4	5	6	7	8	9	10
L1	115.9	126.4	136.9	147.4	157.9	168.4	178.9	189.4	199.9
L2	63	73.5	84	94.5	105	115.5	126	136.5	147

Dimensions: SY5000 Series

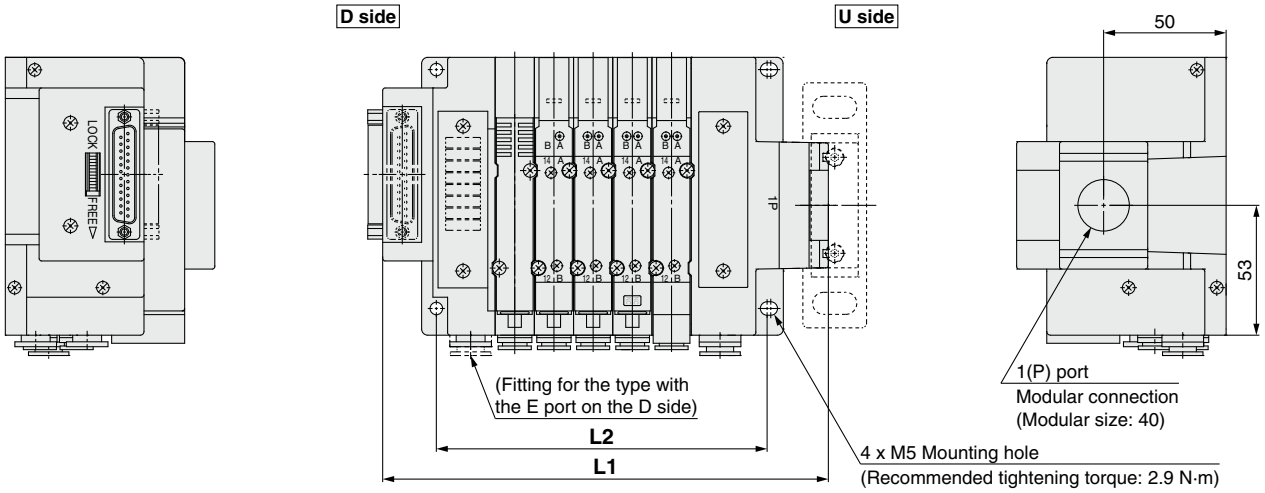

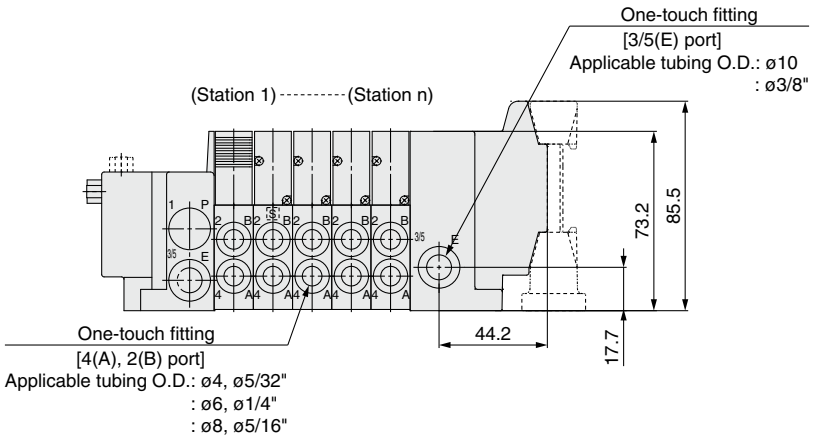

* These figures show the "SS5Y5-10F2-05U-C8-X990."
* The other dimensions are the same as those of the standard model. For details, refer to the **Web Catalog**.

D-sub, Flat Ribbon (Type F)

Refer to the table below for the L1 and L2 dimensions of the D-sub and flat ribbon (Type F).

L: Dimensions

n: Stations	2	3	4	5	6	7	8	9	10
L1	133.9	149.9	165.9	181.9	197.9	213.9	229.9	245.9	261.9
L2	87	103	119	135	151	167	183	199	215

IP67 D-sub (Type FW)

Refer to the table below for the L1 and L2 dimensions of the IP67 D-sub (Type FW).

L: Dimensions

n: Stations	2	3	4	5	6	7	8	9	10
L1	148	164	180	196	212	228	244	260	276
L2	87	103	119	135	151	167	183	199	215

Dimensions: SY5000 Series

Terminal Block Box (Type T)

Refer to the table below for the L1 and L2 dimensions of the terminal block box (Type T).

L: Dimensions

n: Stations	2	3	4	5	6	7	8	9	10
L1	206.8	222.8	238.8	254.8	270.8	286.8	302.8	318.8	334.8
L2	87	103	119	135	151	167	183	199	215

Terminal Block Box/Spring Type (Type TC)

Refer to the table below for the L1 and L2 dimensions of the terminal block box/spring type (Type TC).

L: Dimensions

n: Stations	2	3	4	5	6	7	8	9	10
L1	185.5	201.5	217.5	233.5	249.5	265.5	281.5	297.5	313.5
L2	87	103	119	135	151	167	183	199	215

Lead Wire (L), Circular Connector (M)

Refer to the table below for the L1 and L2 dimensions of the lead wire and circular connector.

L: Dimensions

n: Stations	2	3	4	5	6	7	8	9	10
L1	154.5	170.5	186.5	202.5	218.5	234.5	250.5	266.5	282.5
L2	87	103	119	135	151	167	183	199	215

EX500 (Type SA2)

Refer to the table below for the L1 and L2 dimensions of the EX500 (Type SA2).

L: Dimensions

n: Stations	2	3	4	5	6	7	8	9	10
L1	146	162	178	194	210	226	242	258	274
L2	87	103	119	135	151	167	183	199	215

EX500 (Type SA3)

Refer to the table below for the L1 and L2 dimensions of the EX500 (Type SA3).

L: Dimensions

n: Stations	2	3	4	5	6	7	8	9	10
L1	146.2	162.2	178.2	194.2	210.2	226.2	242.2	258.2	274.2
L2	87	103	119	135	151	167	183	199	215

EX600 (M12 Connector)

Calculate the L1 and L2 dimensions for the EX600 (M12 connector) using the formula shown below.

L1 = 16 x n1 + 167 + 47 x n2
L2 = 16 x n1 + 55
n1: Valve stations
n2: I/O unit stations

Dimensions: SY5000 Series

EX600 (7/8 Inch Connector)

Calculate the L1 and L2 dimensions for the EX600 (7/8 inch connector) using the formula shown below.

L1 = 16 x n1 + 183.5 + 47 x n2
L2 = 16 x n1 + 55
n1: Valve stations
n2: I/O unit stations

EX250

Calculate the L1 and L2 dimensions for the EX250 using the formula shown below.

L1 = 16 x n1 + 167 + 21 x n2
L2 = 16 x n1 + 55
n1: Valve stations
n2: I/O unit stations

EX260

Refer to the table below for the L1 and L2 dimensions of the EX260.

L: Dimensions

n: Stations	2	3	4	5	6	7	8	9	10
L1	146.2	162.2	178.2	194.2	210.2	226.2	242.2	258.2	274.2
L2	87	103	119	135	151	167	183	199	215

EX126

Refer to the table below for the L1 and L2 dimensions of the EX126.

L: Dimensions

n: Stations	2	3	4	5	6	7	8	9	10
L1	206.8	222.8	238.8	254.8	270.8	286.8	302.8	318.8	334.8
L2	87	103	119	135	151	167	183	199	215

EX120

Refer to the table below for the L1 and L2 dimensions of the EX120.

L: Dimensions

n: Stations	2	3	4	5	6	7	8	9	10
L1	142.2	158.2	174.2	190.2	206.2	222.2	238.2	254.2	270.2
L2	87	103	119	135	151	167	183	199	215

SY3000/5000-X990
Accessories Sold Separately (Spacer with Bracket)

Spacer with Bracket

Y 300 T – D

❶ ❷

For the spacer with bracket holding screw tightening torque, refer to the AC-D series catalog.

Spacer with bracket (Y□T-D)



	Symbol	Description	❶ Body size [Applicable AC size] 300 [SY3000 + AC30]	❶ Body size [Applicable AC size] 400 [SY5000 + AC40]
❷ Bracket	T	Spacer with bracket	●	●

Standard Specifications

Fluid	Air
Ambient and fluid temperatures	–5 to 60°C (No freezing)
Proof pressure	1.5 MPa
Max. operating pressure	1.0 MPa

Replacement Parts

Description	Material	Part number	
		Y300T-D	**Y400T-D**
Seal	HNBR	Y320P-050S	Y420P-050S

Dimensions

Spacer with bracket

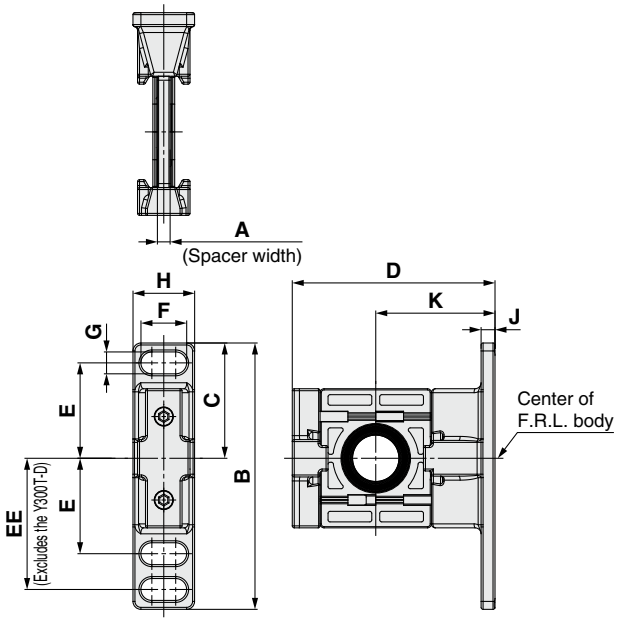

Model	A	B	C	D	E	EE	Applicable size
Y300T-D	4.2	85	42.5	67.5	35	—	**AC30-D**
Y400T-D	5.2	115	50	85.5	40	55	**AC40-D**

Model	F	G	H	J	K	Applicable size
Y300T-D	14	7	20	6	41	**AC30-D**
Y400T-D	18	9	26	7	50	**AC40-D**

⚠ Specific Product Precautions

Be sure to read this before handling the products. For safety instructions, 3/4/5-port solenoid valve precautions, SY3000/5000 specific product precautions, and F.R.L. units precautions, refer to the "Handling Precautions for SMC Products" and the "Operation Manual" on the SMC website: https://www.smcworld.com

Mounting

⚠ Warning

- **When connecting other products such as F.R.L. units, use a spacer with a bracket (Y300T/Y400T-D series) to connect the manifold connection part so that no moment is applied.**
- **Be sure to secure the spacer with a bracket used for connection.**
- **Avoid excessive torsional moment and bending moment other than those caused by the manifold's own weight, as failure to do so may result in damage.**
- **Support external piping separately.**
- **Piping materials without flexibility, such as steel tube piping, are prone to being affected by excess moment loads and vibrations from the piping side. Use flexible tubing in between to avoid such effects.**