next bed™

ASSEMBLY INSTRUCTIONS

Section 1: LAY OUT PARTS

Unpack and familiarize yourself with the components. Single, Double and Queen size Next Beds™ are packed in 2 boxes. Remove the entire contents of both boxes and lay the components out on the floor in the manner of Diagram 1. Double check the cartons to be sure you have not missed any parts left in the packing materials. The Hardware is organized in the card step by step for convenience. Do not remove hardware or Slat Holders until directed.

Architectural Products by Outwater L.L.C • www.outwater.com • 1-800-835-4400

Diagram 1.

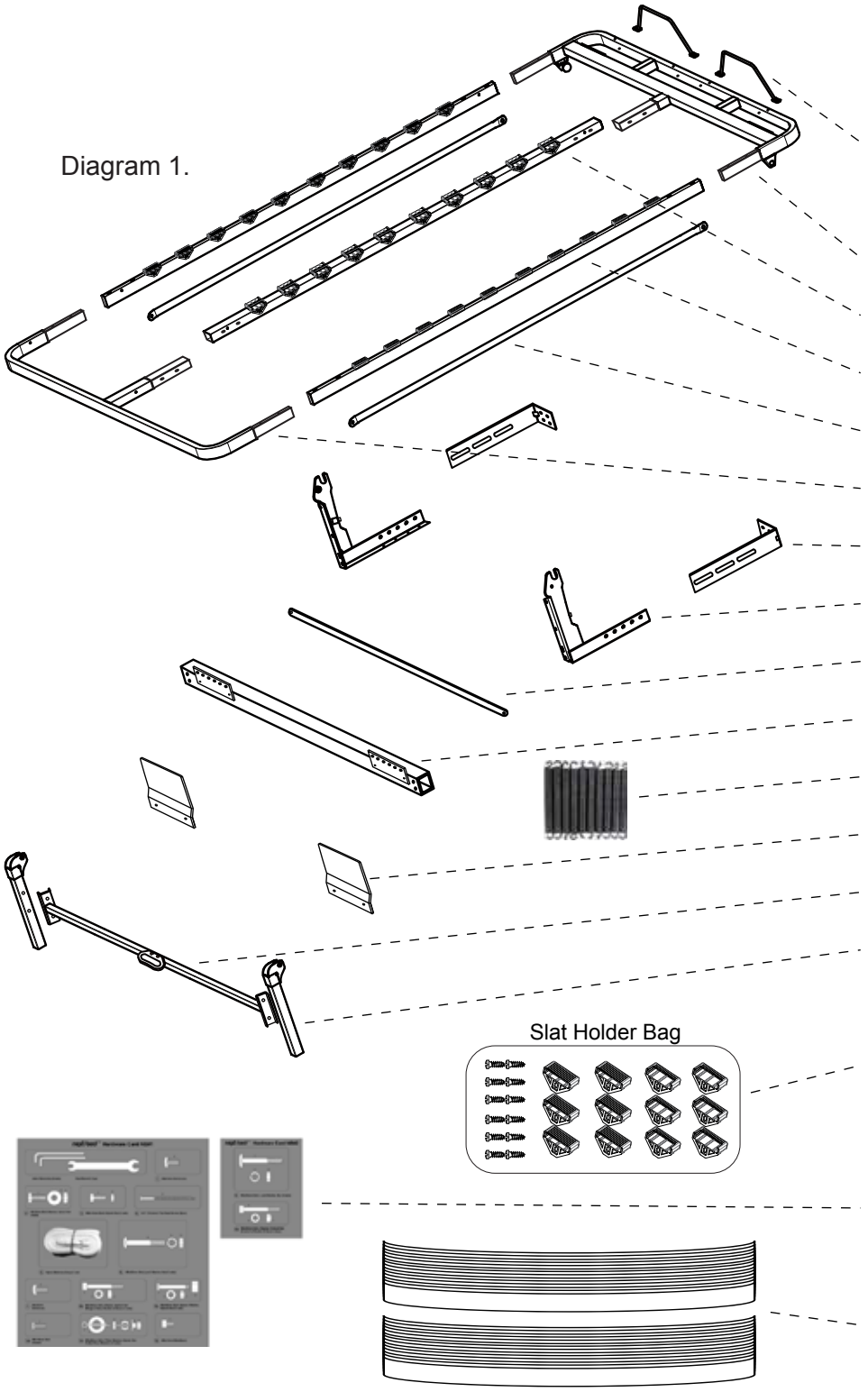

COMPONENT LIST

SINGLE - 38”x75” (965x1900mm)
DOUBLE - 54”x75” (1370x1900mm)
QUEEN - 60”x80” (1520x2030mm)

A. **Mattress Retainer Bar**
- Single Bed (1)
- Double & Queen Bed (2)

B. **Head Frame** (1)

C. **Center Rail** (Double & Queen Bed)

D. **Side Rail** (Pair)

E. **Leg Actuator Bars** (2)

F. **End Frame** (1)

G. **Wall Mount Bracket** (2)

H. **Floor Yokes** (Pair)

I. **Yoke Connector Bar** (1)

J. **Bottom Spring Tube** (1)

K. **Springs** (10)

L. **Spring Cover** (2)

M. **Leg Connector Tube** (1)

N. **Legs** (Pair)

O. **Slat Holder**
(3-Single, 6-Double or Queen)
Opened Slat Holder
(3-Single, 6-Double or Queen)
Self Tapping Screw
(6-single, 12-Double or Queen)

P. **NX-1 Hardware Card** (1)
NX-2 Hardware Card (1, Double or Queen)
(coordinates with step numbers)

Q. **Slats** (13-Single, 26-Double, 28-Queen)

Section 2: YOKE ASSEMBLY

Assemble the Yoke Assembly components as shown. If you are installing the bed in a 16” deep cabinet, fasten the Floor Yokes and Wall Mount Brackets together not to exceed a 15” projection from the base board or wall. Secure the Yoke Assembly to the base or wall with the screws provided while following the steps below. *Match fasteners with the actual-size drawings to ensure you use the correct pieces.*

1. Attach the Bottom Spring Tube (J) to the Floor Yokes (H).

M8x16mm Bolt (4pcs)

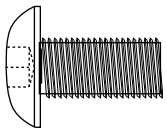

2. Attach the Wall Mount Brackets (G) to the Floor Yokes (H) using the Bolts, Nuts and Washers shown below. Place bolt heads on outside. Do not tighten bolts now so you can adjust later.

M8x20mm Bolt, 2 Flat Washers, Nylock Nut (4 sets)

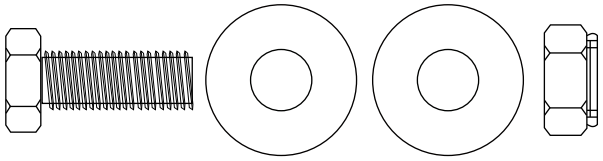

3. Attach Yoke Connector Bar (I) to the Floor Yokes (H).

M6x18mm Bolt, Nylock Nut (2 sets)

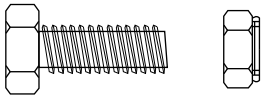

4. Insert screws through Wall Mount Brackets (G) and into Wall or Base Board at a downward angle.

8-3" (76.2mm) Flat Head Screw (8pcs)

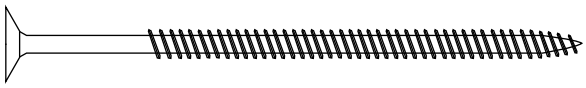

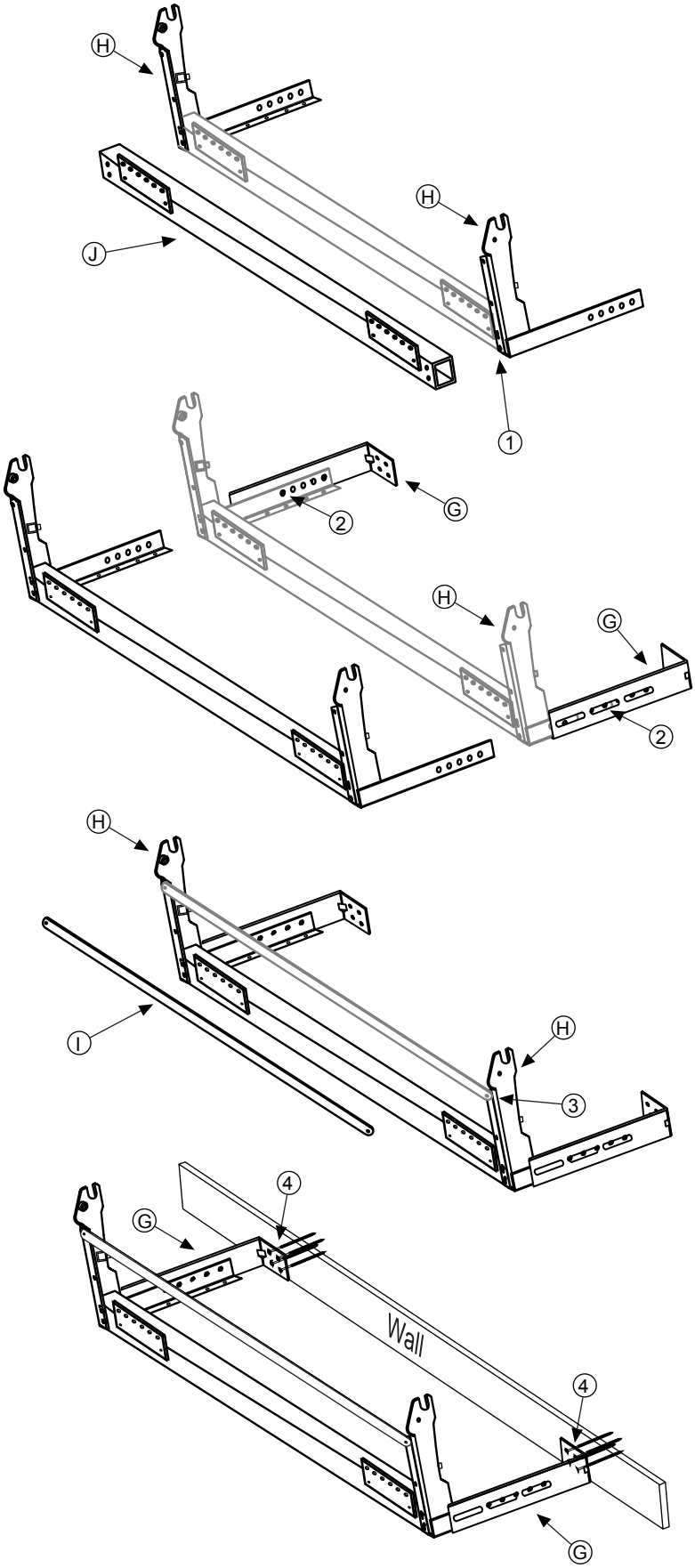

Section 3: BED FRAME ASSEMBLY

5. Feed one end of each Side Rail (D) through the loops of the Nylon Mattress Strap.

6. Slide End Frame (F), Head Frame (B), Side Rails (D) and Center Rail (C) together as shown.
Attach End Frame (F) and Head Frame (B) to Side Rails (D); 2 bolts at foot, 4 bolts at head.
M8x53mm Bolt, Lock Washer, Nut (6 sets)

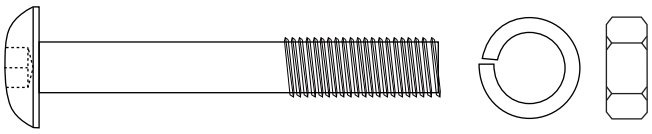

7. Attach End Frame (F) to Side Rails at Leg end.
Bolts do not go through frame.
M8x16mm Bolt (4pcs)

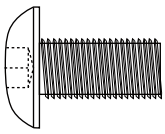

8. Attach End Frame (F) and Head Frame (B) to Center Rail (C). (For Double and Queen Beds only)
M8x55mm Bolt, Lock Washer, Nut (4 sets)

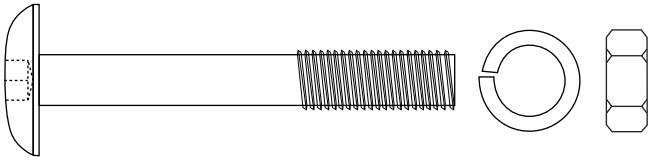

9. Attach Slat Holder and Opened Slat Holder (O) to End Frame (F) and Center Rail (C).
One Slat Holder across from one Open Slat Holder
#5x16mm Self-Tapping Screw (12pcs)

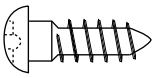

Slat Holder (6pc) attach to Side Rails - not shown to scale

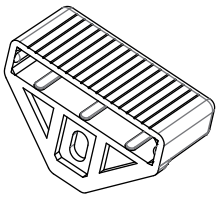

Open Slat Holder (6pcs) attach to Center Rails - not shown to scale

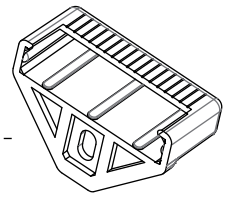

10. Attach Mattress Retainer Bar (A) to Head Frame (B)
M6x50mm Bolt, Washer, Nylock Nut
(Single-2 Sets, Double and Queen-4 sets)

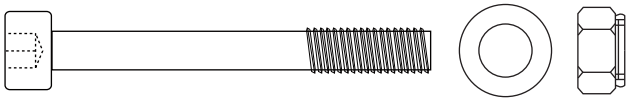

****Do not attach Leg Actuator Bars (E) at this time****

Section 4: LEG ASSEMBLY

11. Stand the assembled frame. Lift and set the hinge axles of the Head Frame (B) into the hinges of the Yoke Assembly.

12. Stabilize the frame in the vertical position by applying one spring on either side (Photo **1**).

13. Attach Legs (N) to Side Rails (D), see Detail A. Do not over tighten so Legs may pivot freely.
M6x42mm Bolt, Spacer, Washer, Nylock Nut (2 sets)

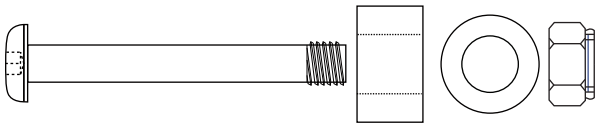

14. Attach Leg Connector Tube (M) to Legs (N) as shown.
M6x16mm Bolt (4 sets)

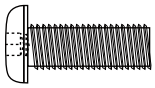

15. Attach Actuator Bars (E) to the Leg Brackets (N) with Cotter Pins (see Detail **A**), then to the Floor Yokes (H) with Cotter Pins. Bend back ends to secure.
Cotter Pins, Washers (4 sets)

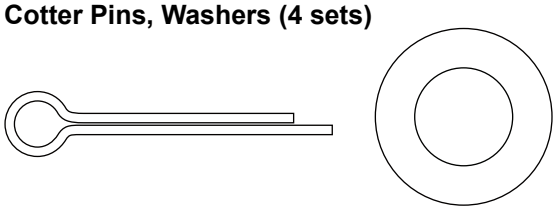

16. Rotate the bed down horizontal and install the Slats (Q) by slipping one end into the closed Slat Holder and flexing the slat slightly and tapping it into the open ended Slat Holder.

17. Put Mattress in place and secure with Nylon Web Strap.

18. Install proper number of Springs to balance. Raise bed frame with mattress to the vertical position. Add an equal # of springs on each side until the bed frame is almost weightless at the 45* angle. Remember that the system will weigh slightly more when bedding is added to the system. See Photo 1.

19. Install the Spring Covers (L) to the Bottom Spring Tube (J) to cover the installed springs.
M6x10mm Bolt (4pcs)

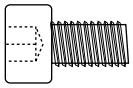

20. Adjust the Wall Mount Brackets on the Yoke Assembly to have the bed operate at the minimum distance from the wall. Tighten bolts in place.

Photo **1**

First hook bottom of spring in the Bottom Spring Tube (J), then using vice grips pull up and set the top spring hook. You may use leverage from the Yoke Connector Bar (I).

Detail **A** - not full scale

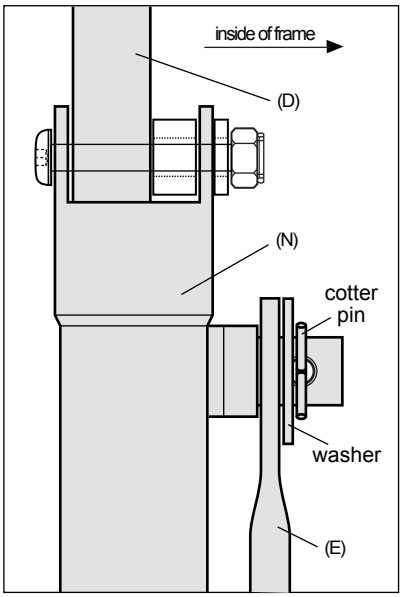

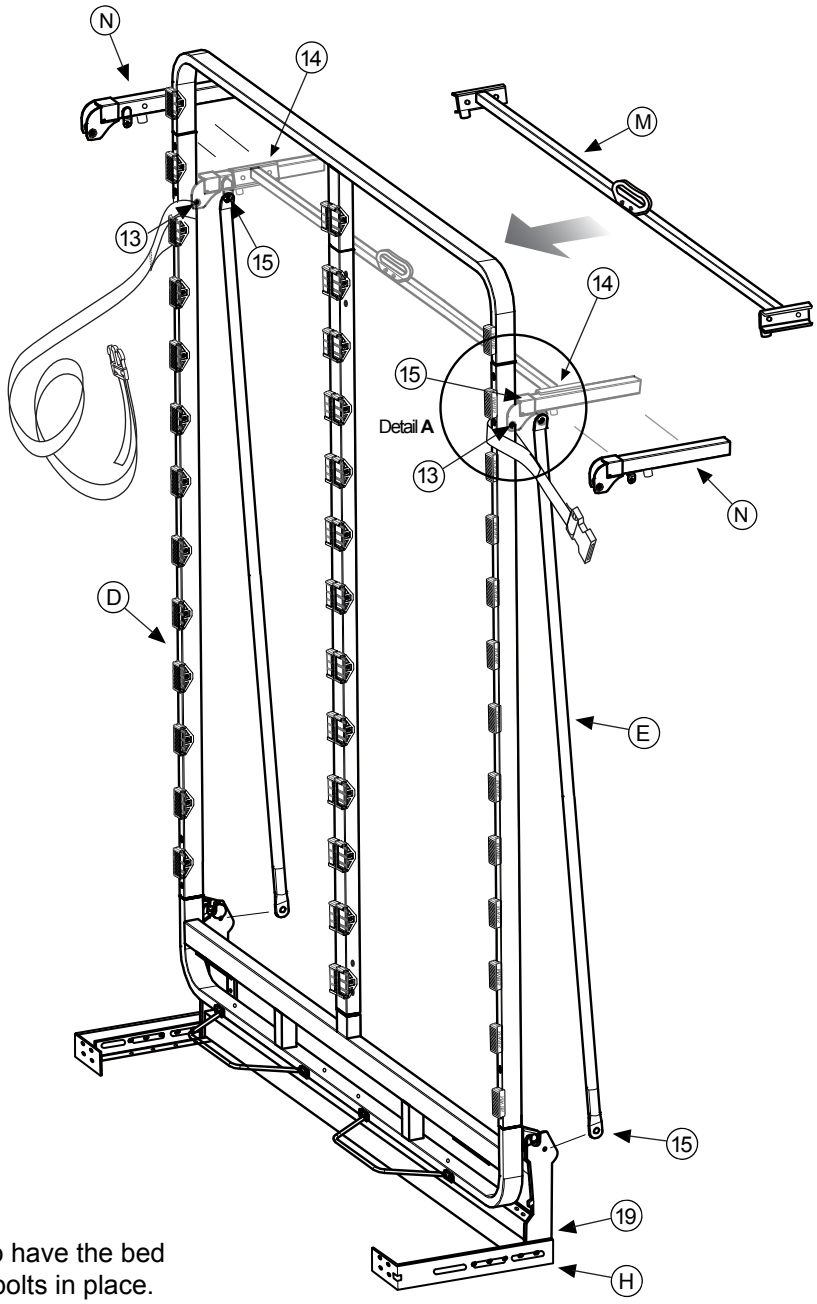

Section 5: Next Bed MEASUREMENTS

To assist in floor space planning and bed cabinet fabrication. inches(centimeters)

Next Bed Measurements with mattress up to 12”	Single	Double	Queen
Next Bed frame **width**	38” (97)	53”(135)	59”(150)
Next Bed frame **height**	80”(203)	80”(203)	85”(218)
Projection from wall (P) - Bed closed	15”(38)	15”(38)	15”(38)
Projection from wall (P) - Bed in use	82”(208)	82”(208)	87”(221)
Height - Floor to top of mattress in use	24”(61)	24”(61)	24”(61)
Suggested inside cabinet depth	16”(41)	16”(41)	16”(41)
Suggested inside cabinet width	43.5”(110)	58.5”(149)	64.5”(164)
Suggested inside cabinet height	81.25”(206)	81.25”(206)	86.25”(219)
Mattress size width	38”(97)	54”(137)	60(152)
Mattress size length	75”(190)	75”(190)	80”(203)

Next Bed may be used with or without a cabinet. The cabinet is totally free standing and does not attach to the Next Bed mechanism. The cabinet must be secured to the wall to insure its position relative to the Next Bed frame. Allowance has been made in the interior cabinet sizes to provide for bed linens to easily be enclosed in the available space.

Listed are the suggested bed cabinet components, the finished cabinet installed sizes, and the measurements for a 16” deep cabinet with a 12” thick mattress. If you wish to use a mattress thicker than 12”, you must increase the depth of the cabinet components - the side panels and the main header, proportionally.

Section 6: CABINET COMPONENTS

- Top Valance (C) mounts on top of the Main Header (B)
- The top of the Main Header (B) is 3” down from the top of the Side Panels (A)
- The Doors (E) are mounted 3” down from the top of the Side Panels (A)
- Outside Doors(E) mount to Side Panels(A) with hinges from inside
- The Bottom Kick(D) is recessed 1” from the front edge of the Side Panels (A)

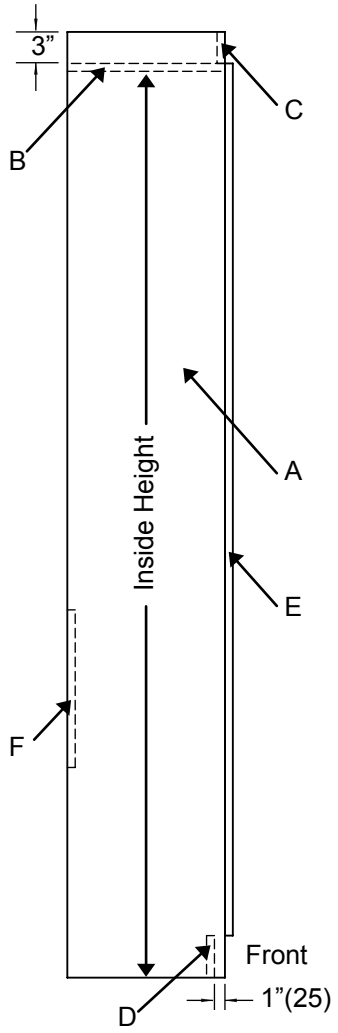

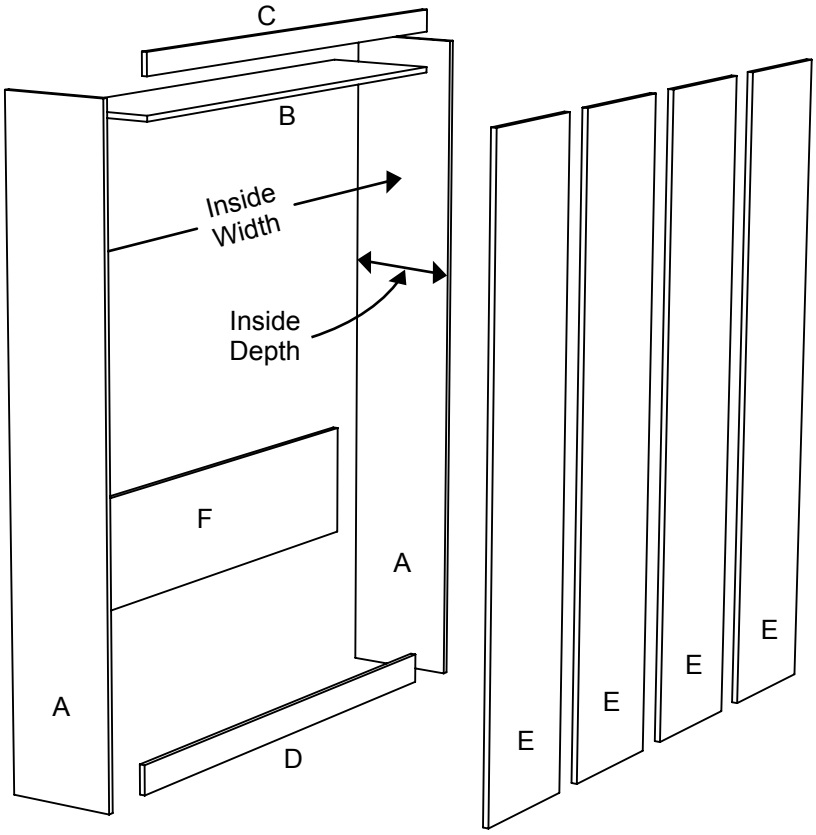

Section 7: CABINET CUT LIST

All dimensions are finished sizes. All material is 3/4 inch thickness. inches(centimeters)

Part	Description	Qty.	**Single/Twin** (S/T)	**Double/Full** (D/F)	**Queen** (Q)	**King** (K)	**Finished Edges**
A	Side Panels	2	85”(213)x16”(41)	85”(213)x16”(41)	90”(229)x16”(41)	90”(229)x16”(41)	1 Long
B	Main Header	1	43.5”(110)x16”(41)	58.5”(149)x16”(41)	64.5”(164)x16”(41)	84.5”(215)x16”(41)	1 Long
C	Top Valance	1	43.5”(110)x3”(8)	58.5”(149)x3”(8)	64.5”(164)x3”(8)	84.5”(215)x3”(8)	0 Edges
D	Bottom Kick	1	43.5”(110)x4”(10)	58.5”(149)x4”(10)	64.5”(164)x4”(10)	84.5”(215)x4”(10)	1 Long
E	Doors: S/T	3	78”(198)x15”(38)	——	——	——	4 Edges
E	Doors: D/F, Q, K	4	——	78”(198)x15”(38)	83”(211)x16.5”(42)	83”(211)x21.5”(55)	4 Edges
F	Headboard	1	43.5”(110)x15”(38)	58.5”(149)x15”(38)	64.5”(164)x15”(38)	84.5”(215)x15”(38)	2 Long

Section 8: FOOTPRINT DIMENSIONS

Cabinet Size & Projection from Wall
All beds accept mattress thickness up to 12 inches (see footnote for thicker mattresses).
inches(centimeters)

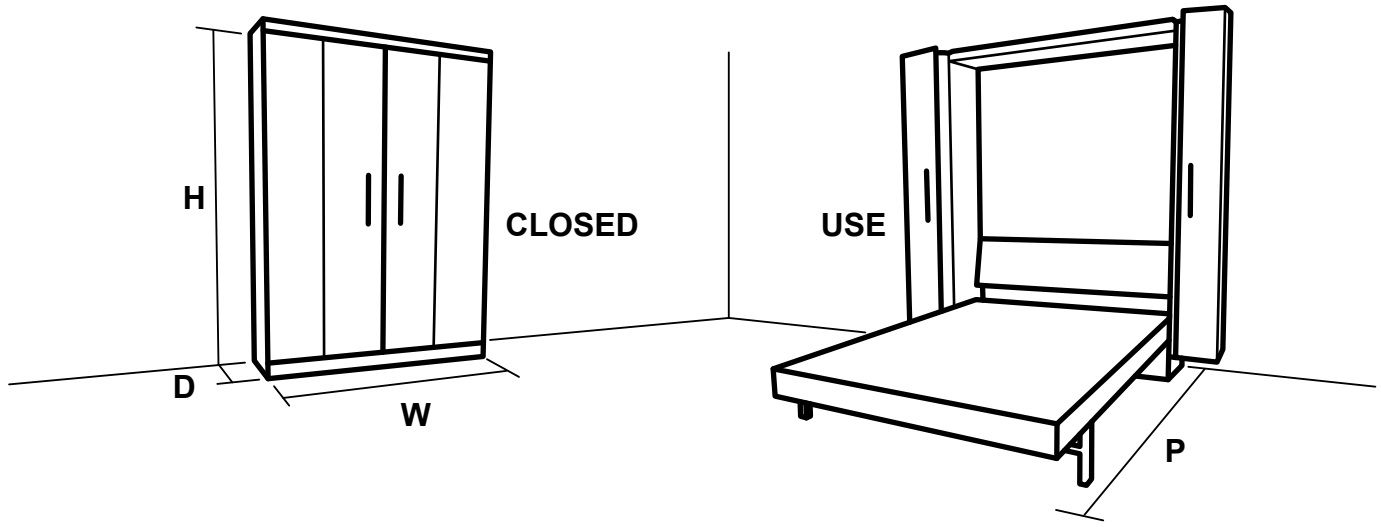

next bed™ Cabinet Sizes	Single	Double	Queen	King
Cabinet Size DxWxH (metric)	16”x45”x85” (41x114x213)	16“x60”x85” (41x152x213)	16”x66”x90” (41x168x229)	16’x86“x90” (41x218x229)
Projection from wall (P) Bed in use (metric)	82” (208)	82” (208)	87” (221)	87” (221)
Mattress Size - WxL (metric) 12“(30) thick	39”x75” (99x190)	54”x75” (137x190)	60”x80” (152x203)	78”x80” (198x203)

Notes: A King size Next Bed is two single Next Bed frames bolted together at the foot end with a 0.5”(1.27mm) plywood spacer between the frames to allow the automatic legs to operate.

If you wish to use a mattress thicker than 12” (30), you must mount the Next Bed frame a greater distance from the wall by extending the Wall-Mount-Brackets. The cabinet may be made deeper by increasing the width of the Side Panels (A) and the Main Header (B) only. All other cabinet components remain the same. (Refer to Cabinet Cut List above)